SANYO

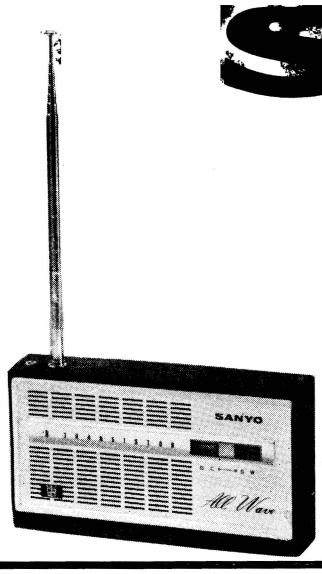

All – Transistor Portable Radio

MODEL 8S-601

SERVICE MANUAL

SANYO ELECTRIC CO., LTD.
OSAKA, JAPAN
INTERNATIONAL DIVISION: SANYO ELECTRIC TRADING CO., LTD.

SPECIFICATIONS

FREQUENCY RANGE ..... BC 530 - 1605 Kc
SW 3.9 - 12 mc

INTERMEDIATE FREQUENCY ..... 455 Kc

TRANSISTORS .....

(1)	2SA222	Frequency converter
(2)	2SA202	1st IF amplifier
(3)	2SA203	2nd IF amplifier
(4)	2SB185	1st AF amplifier
(5)	2SB185	2nd AF amplifier
(6)	2SB185	Driver
(7)	2SB187×2	Power amplifier (B-class push pull)

OUTPUT POWER ..... Undistorted 200 mw
Maximum 350 mw

SENSITIVITY ..... BC 80 μV/m
SW 80 μV/m

SIGNAL TO NOISE RATIO ..... 29 db (at BC band 1 mV/m signal input)

CURRENT DRAIN ..... No signal 13 mA
Maximum 122 mA

BATTERY ..... 6V (Four penlight batteries: UM-3, or 6V radio battery: 4AA)

LOUDSPEAKER ..... 2½″ permanent dynamic speaker 8 ohms

DIMENSIONS ..... 6½″ wide × 3½″ high × 1½″ deep

WEIGHT ..... ⅝ lbs.

ALIGNMENT PROCEDURES

Apply volt-meter across the coil. Volume control should be at maximum position. Output of signal generator should be no higher than necessary to obtain output reading in order to avoid AGC function.

STEP	SIGNAL GENERATOR COUPLING	SIGNAL GENERATOR FREQUENCY	RADIO DIAL SETTING	ADJUST FOR MAXIMUM OUTPUT

IF ALIGNMENT (Band Select in BC position)

1	Fashion loop of several turns of wire and radiate signal into loop antenna.	455 Kc	left end	IFT T3 T2 T1

BROADCAST RF ALIGNMENT

2	Fashion loop of several turns of wire and radiate signal into loop antenna.	515 Kc	left end	BC osc coil L7
3		1650 Kc	right end	BC osc trimmer Ct4
4		Repeat steps 2 and 3.		
5		600 Kc	600 Kc	BC ant coil L1
6		1400 Kc	1400 Kc	BC ant trimmer Ct1
7		Repeat steps 5 and 6.		

SHORT WAVE RF ALIGNMENT

8	Fashion loop of several turns of wire and radiate signal into loop antenna.	2.25 Mc	left end	SW osc coil L6
9		7.5 Mc	right end	SW osc trimmer Ct3
10		Repeat steps 8 and 9.		
11		2.5 Mc	2.5 Mc	SW ant coil L4,L5
12		6.5 Mc	6.5 Mc	SW ant trimmer Ct2
13		Repeat steps 11 and 12.		

ADJUSTMENT OF SEMI-FIXED RESISTOR

Set the value of SVR at maximum and make a receiver tune in no signal (station).

Apply 6.0 volts to it as power source.

Connect an ammeter (range lmA) between two points.

Adjust the value of SVR in order to obtain such a meter reading as 380μA (tolerance = 20%).

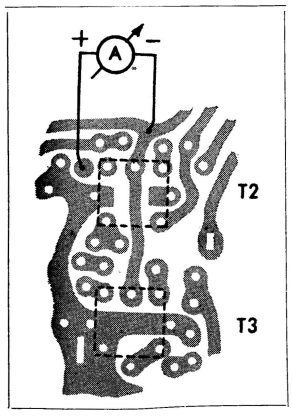

PARTS LIST

PART No.	STOCK No.	DESCRIPTION
TRANSISTORS		
Tr 1	2SA 222	Frequency converter
Tr 2	2SA 202	1st. IF amplifier AA violet
Tr 3	2SA 203	2nd. IF amplifier 〃 〃
Tr 4	2SB 185	1st. AF amplifier 〃 〃
Tr 5	2SB 185	2nd. AF amplifier 〃 〃
Tr 6	2SB 185	Driver 〃 〃
Tr 7	2SB 187	Power amplifier 〃 〃 Pushpull
Tr 8	2SB 187	Power amplifier 〃 〃 Pushpull
DIODE & THERMISTOR		
D	1S 188	Detecter & AGC
Th	SDT - 20	Temperature compensator
COILS		
L1-L5	R S8739	Antenna coil (with holder) 325μH 6.8μH
L6	R-W8081	Oscillator coil -for SW 6.1μH yellow
L7	R-W8124	Oscillator coil -for BC 155μH
TRANSFORMERS		
T1	R-W5T041	1st .IF yellow 50K:40Ω
T2	R-W5T054	2nd. IF white 50K:300Ω
T3	R-W5T062	3rd. IF black 40K:5K
T4	R-W6226 or R-W6257	Input 2K:1K
T5	R-W6246 or R-W6256	Output 200:8Ω
CONTROLS		
VC	R-C1025	Tuning gang capacitor each 5～250pF
VR	R-R11639	Volume control 10K with SPST Switch
SVR	R-R11011	Semi-fixed value resistor 100K
	R-C0034	4-blocked trimmer
	R-S4268	Slide switch -for band select
SPEAKER		
SP	R-S6286	2½″ permanent dynamic speaker 8 ohms 0.4W
FIXED CAPACITORS		
C1		Ceramic 6pF ± 10% 50WV
C2		Mylar 0.005μF ± 20% 〃
C3		〃 0.01μF 〃 〃
C6		〃 0.004μF 〃 〃
C7		〃 0.0015μF 〃 〃
C9		Styrol 2150pF ± 10% 125WV
C10		〃 330pF 〃 〃
C11		Ceramic 8pF 〃 50WV
C12	R-C9105	Electrolytic 30μF 6WV
C13	R-C9119 or R-C9142	〃 〃 3WV
C14		Ceramic 15pF ± 10% 50WV
C16		Barrier 0.05μF+80−20%10WV
C17		Ceramic 12pF ± 10% 50WV
C21	R-C9078 or R-C9131	Electrolytic 5μF 6WV
C22	R-C9126	〃 0.1μF 10WV
C23		Mylar 0.005μF ± 20% 50WV
C25	R-C9078 or R-C9131	Electrolytic 5μF 6WV
C26	R-C9080 or R-C9133	〃 30μF 3WV
C27	R-C9086a	〃 120μF 6WV
C28		Mylar 0.005μF ± 20% 50WV
C29		〃 〃 〃 〃
C30	R-C9086a	Electrolytic 120μF 6WV
C31		Mylar 0.02μF ± 20% 50WV

PART No.	STOCK No.	DESCRIPTION
PACKED CAPACITORS AND RESISTOR		
C19,020 R8	R-CXC015	(1Kohms±10%1/10W)+ (0.01μF+80−20%25WV) ×2
C15,R6	R-CXC025	(0.04μF+80−2025WV)+ (1.2Kohms±10%1/10W)
C18,R7	R-CXC026	(0.04μF+80−2025WV)+ (820ohms±10%1/10W)

FIXED RESISTORS

SYMBOL #	DESCRIPTION		
R 1*	22K	ohms	10%
R 2*	5.6K	〃	〃
R 3*	2.2K	〃	〃
R 4*	1.8K	〃	〃
R 5*	1K	〃	〃
R 9	4.7K	〃	〃
R10*	33K	〃	〃
R11*	10K	〃	〃
R12*	470	〃	〃
R13*	39	〃	〃
R14*	33K	〃	〃
R15*	2.2K	〃	〃
R16*	680	〃	〃
R17*	33K	〃	〃
R18*	4.7K	〃	〃
R19*	330	〃	〃
R20*	220	〃	〃
R21	3.3K	〃	5%
R22*	220	〃	10%
R23	5.6	〃	5%
R24*	27K	〃	10%
R25*	180	〃	〃
R26	3.3K	〃	〃

Type of resistors may be either a solid type or a carbon film one. Wattage of all resistors is ¼W.
But those with * mark attached to their reference numbers may be of ½W, for carbon film type only.

MISCELLANEOUS

STOCK No.	DESCRIPTION
R-48163	Leather case
R-39152	Earphone case
R-36152	(Carrying) strap
R-31574a	Cabinet
R-31575	Back cover
R-26848	Metal frame
R-26949	Badge
R-32417	Plastic panel
R-26944	Band indicator
R-25145	Speaker mtg. metal
R-41354a	Printed wiring board
R-32418	Volume control knob
R-33423	Tuning knob
R-39108a	Drum
R-15116	Spring
R-24431	Stud nut -for dial disk mtg.
R-S1027a	Snap-on terminal
R-24107	Ant. fixing stud nut -for telesc. ant.
R-24109	Ant. fixing nut -for telesc. ant.
R-S1236	Telescoping antenna
R-S8969	Battery case
R-S6210a	Earphone magnetic low impedance
	Dial cord 0.5∅ tetron 600mm

PARTS LOCATION

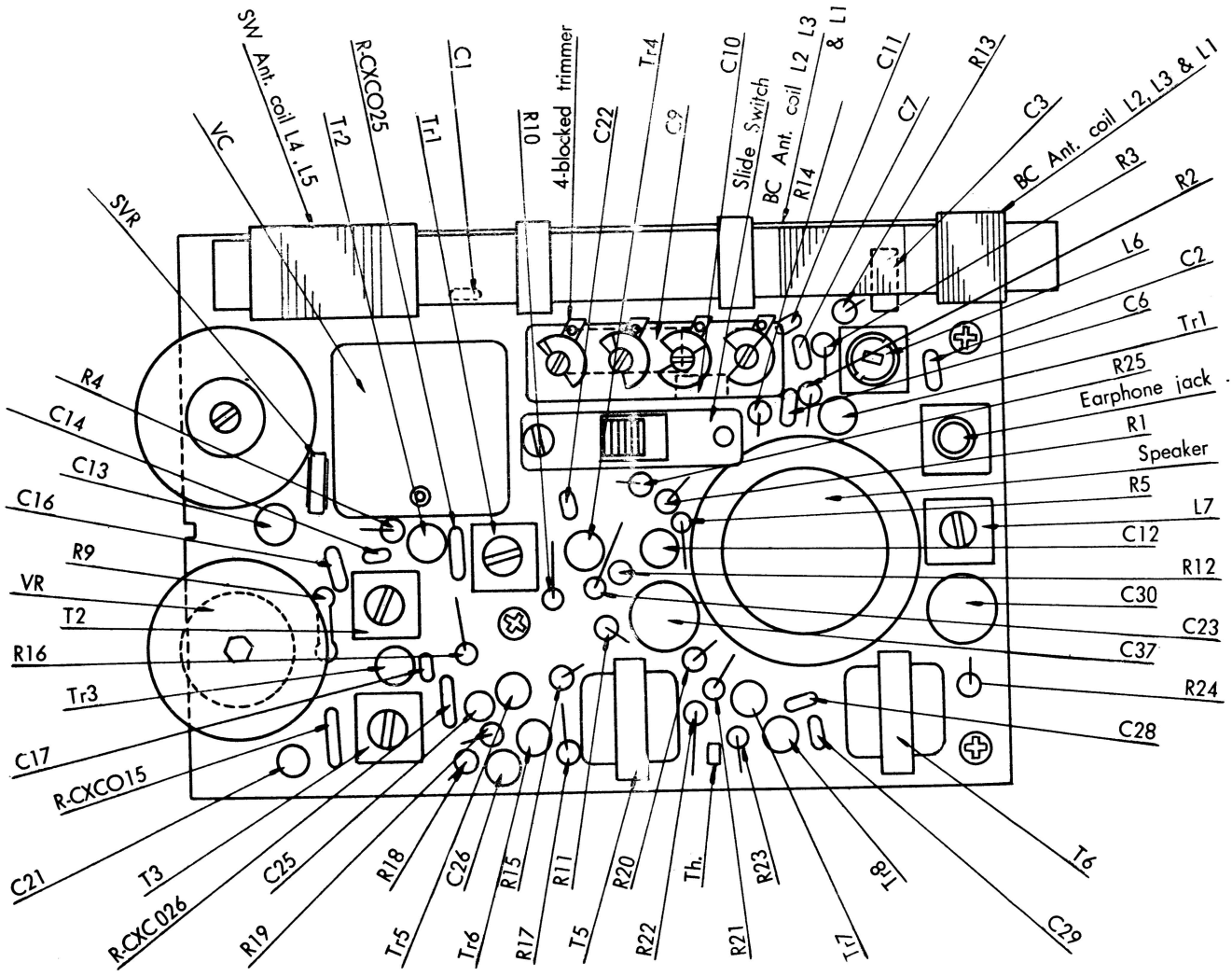

ANTENNA COIL TERMINAL IDENTIFICATION

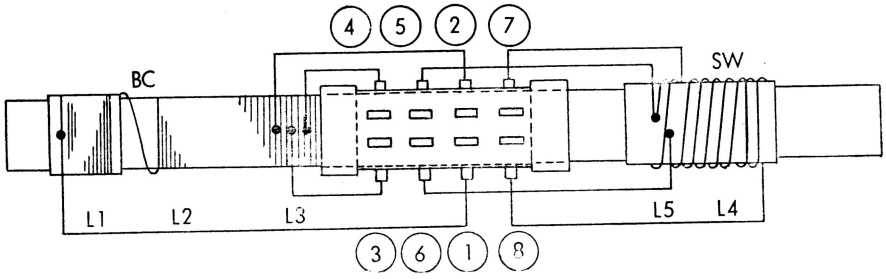

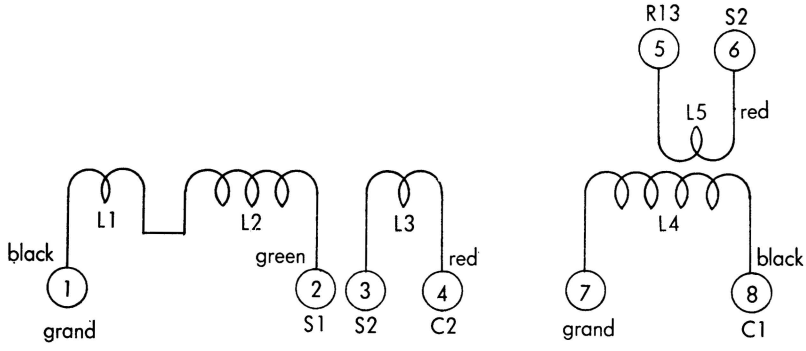

CIRCUIT DIAGRAM

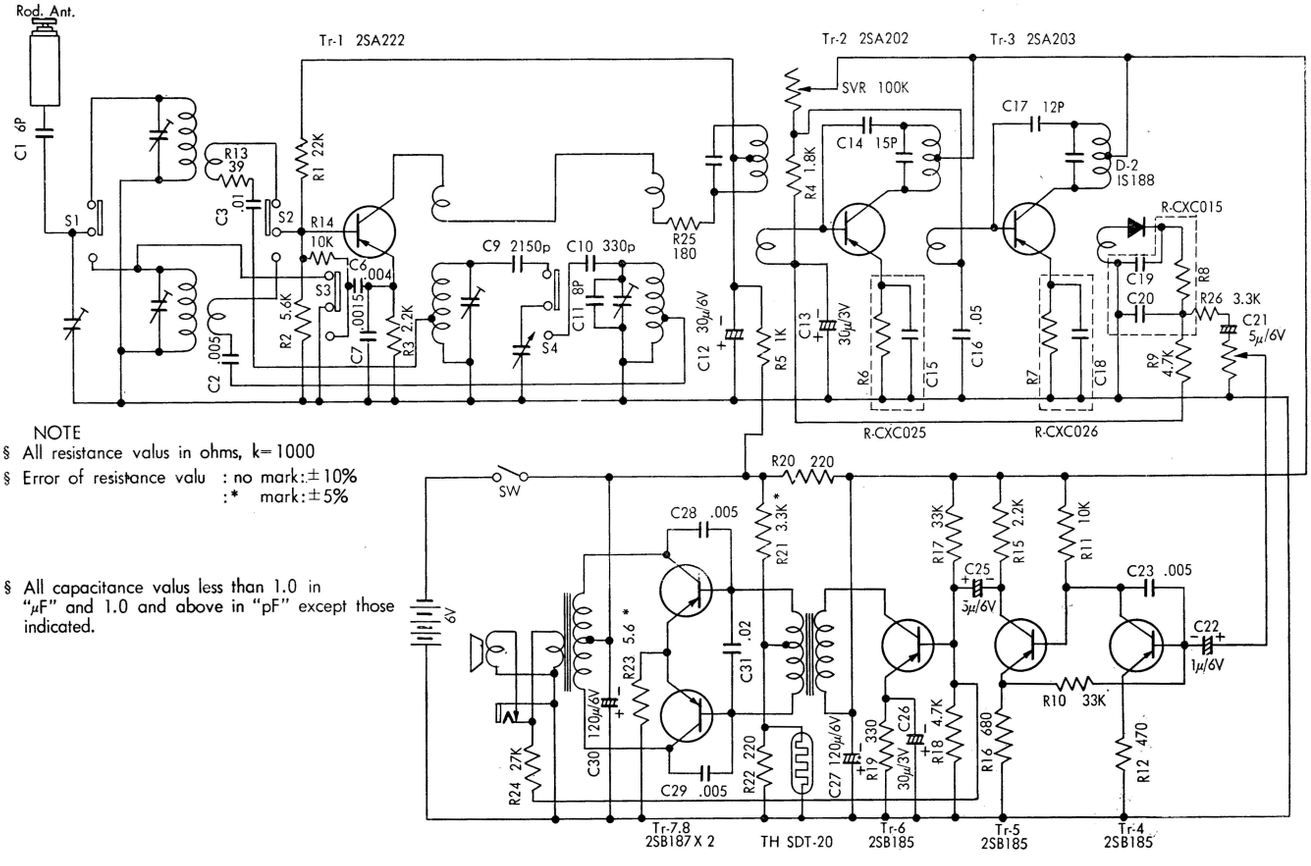

NOTE

§ All resistance valus in ohms, k=1000

§ Error of resistance valu : no mark: ±10%
: * mark: ±5%

§ All capacitance valus less than 1.0 in "μF" and 1.0 and above in "pF" except those indicated.
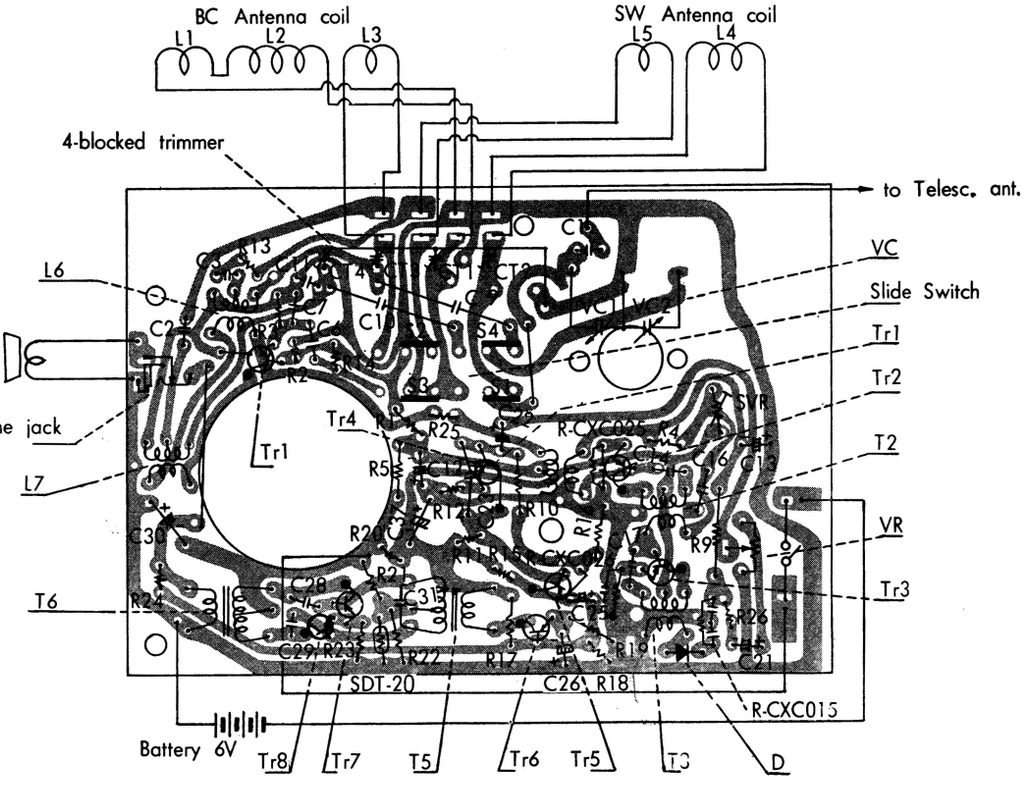
INTER-PARTS WIRING ILLUSTRATION