Mounting Diagram
AF Block
— Conductor Side —

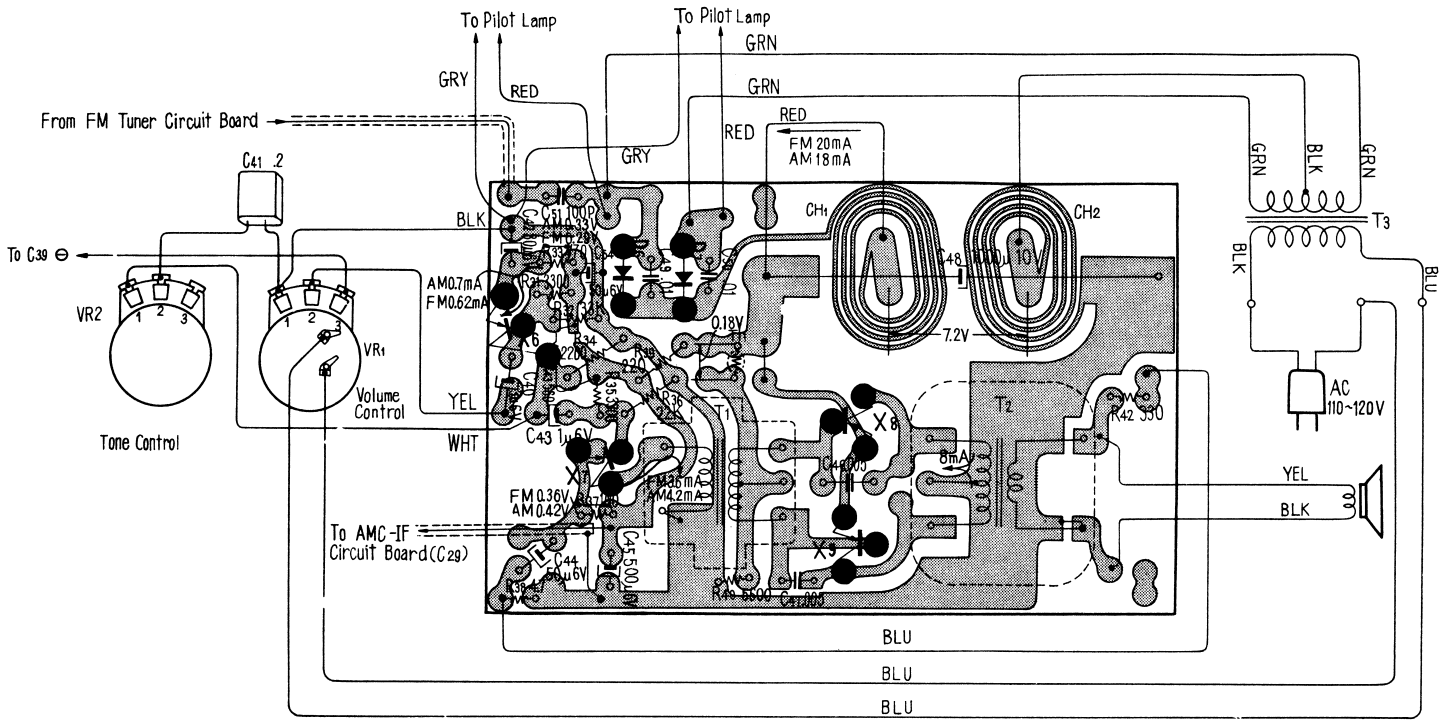

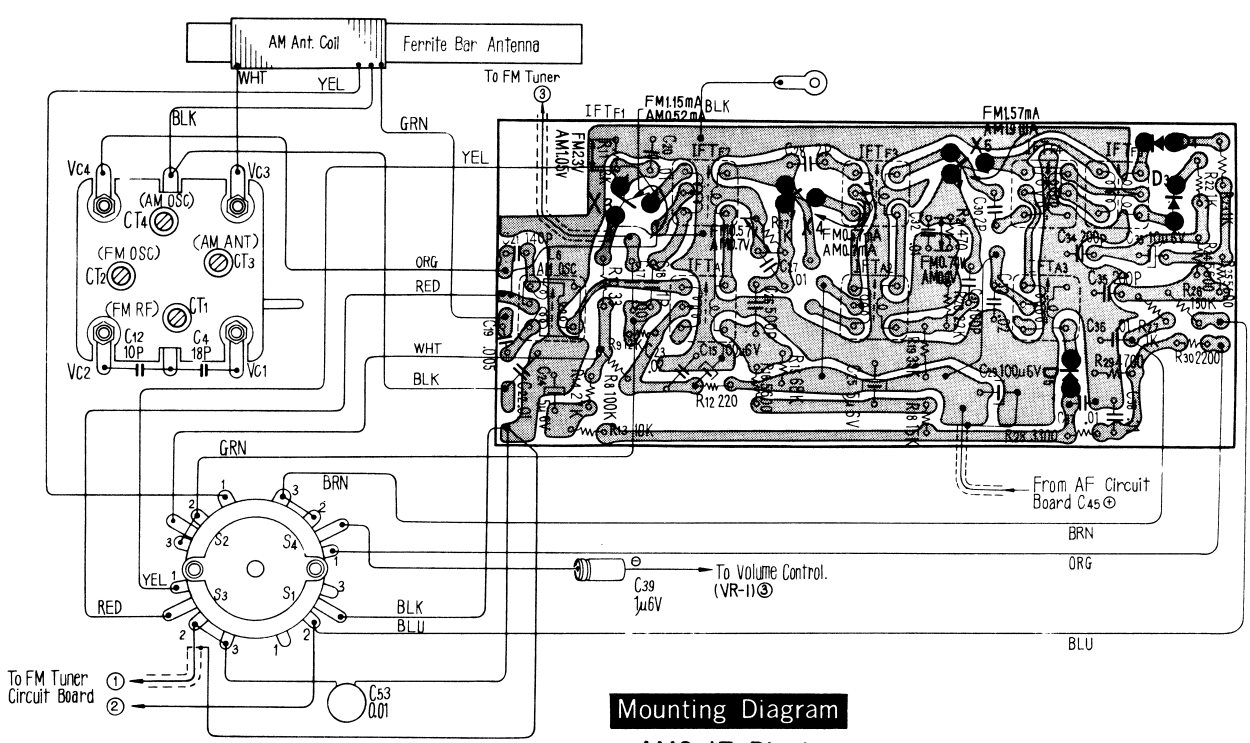

Mounting Diagram
AMC-IF Block
— Conductor Side —

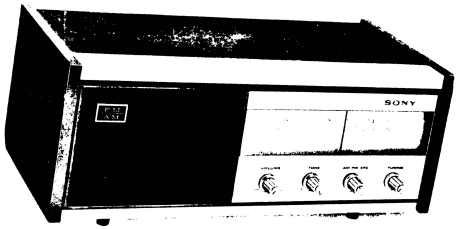

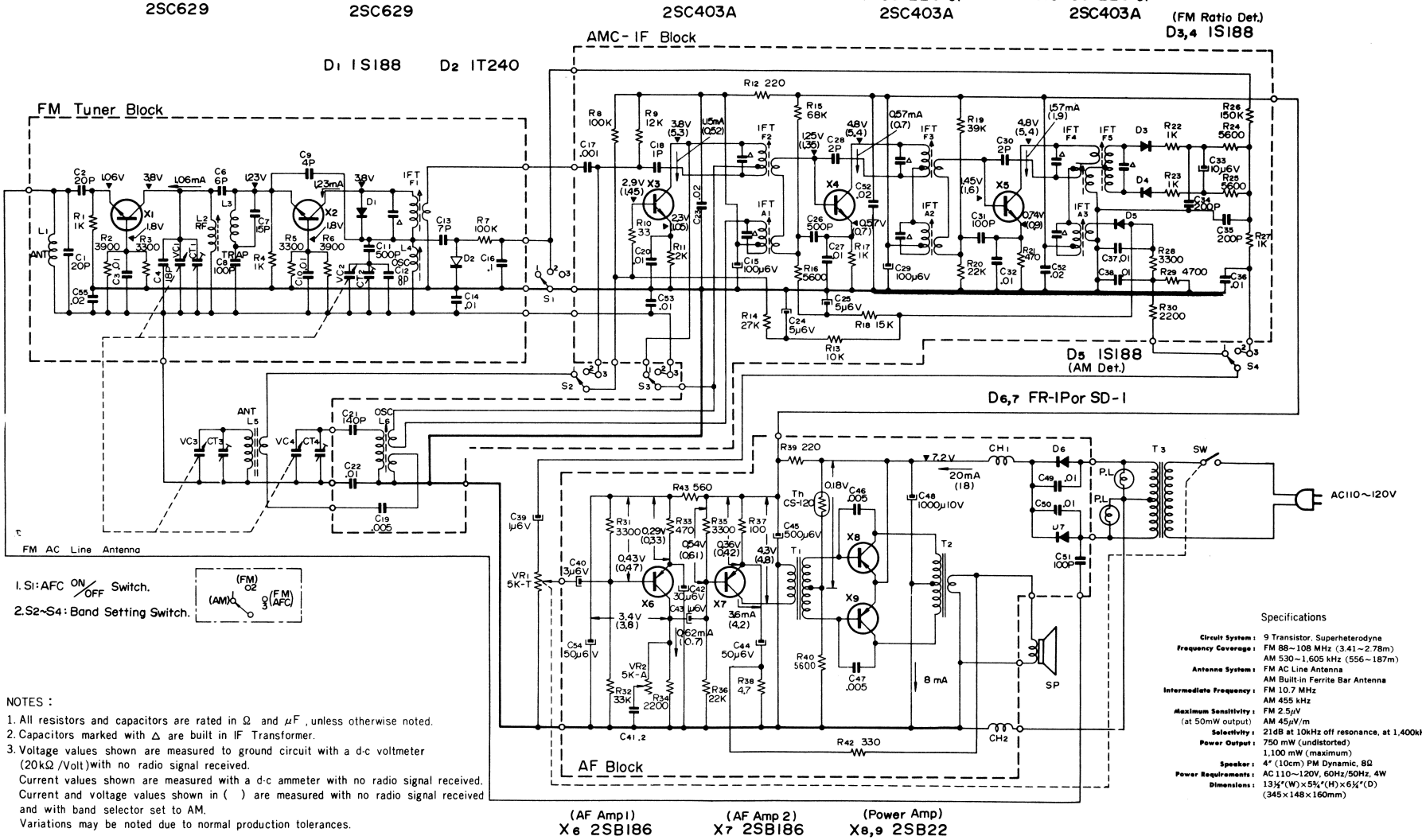

NOTES :

1. All resistors and capacitors are rated in Ω and μF, unless otherwise noted.
2. Capacitors marked with Δ are built in IF Transformer.
3. Voltage values shown are measured to ground circuit with a d-c voltmeter (20kΩ/Volt) with no radio signal received.
   Current values shown are measured with a d-c ammeter with no radio signal received.
   Current and voltage values shown in ( ) are measured with no radio signal received and with band selector set to AM.
   Variations may be noted due to normal production tolerances.

Specifications

Circuit System :	9 Transistor, Superheterodyne
Frequency Coverage :	FM 88~108 MHz (3.41~2.78m)
	AM 530~1,605 kHz (556~187m)
Antenna System :	FM AC Line Antenna
	AM Built-in Ferrite Bar Antenna
Intermediate Frequency :	FM 10.7 MHz
	AM 455 kHz
Maximum Sensitivity :	FM 2.5μV
(at 50mW output)	AM 45μV/m
Selectivity :	21dB at 10kHz off resonance, at 1,400kHz
Power Output :	750 mW (undistorted)
	1,100 mW (maximum)
Speaker :	4" (10cm) PM Dynamic, 8Ω
Power Requirements :	AC 110~120V, 60Hz/50Hz, 4W
Dimensions :	13½"(W)×5¾"(H)×6¼"(D)
	(345×148×160mm)