SANYO

8-transistor portable radio

MODEL 8CA-308

SERVICE MANUAL

SANYO ELECTRIC CO., LTD.

INTERNATIONAL DIVISION : SANYO ELECTRIC TRADING CO., LTD.
OSAKA, JAPAN

SPECIFICATIONS

Frequency Range ..... 530–1,605 Kc
Intermediate Frequency ..... 455 Kc
Transistors ..... 2SA203 Local oscillator
2SA203 Frequency mixer
2SA202 1st IF. amplifier
2SA203 2nd IF. amplifier
2SB185×2 RF. amplifier
2SB22×2 Power amplifier
Diode ..... 1S188 Detector & AGC.
Thermistor ..... SDT-09 Temperature compensator
Sensitivity ..... 10mW output 40 μV/m
Distortion ..... 50mW output at 5mV/m input 2.5%

Output Power ..... Maximum 650 mW
Undistorted 400 mW
Signal to Noise ratio ..... 10mW output at 5mV/m input 45 dB
Current Drain ..... Maximum 160 mA
No signal 12 mA
Loudspeaker ..... 4″ permanent dynamic speaker
Voice coil impedance 8 ohms
Power Source ..... 6 Volt: "D" size (UM-1)×4
AC. 117 volt 50–60 cycle
Dimensions ..... 9⅝″ width×6⅜″ height×3¾″ depth
(243×161×94m/m)
Weight ..... 4.2 lbs. (1.9 kg)

ALIGNMENT PROCEDURES

(1) **Alignment of Semi-fixed resistor.**

Apply 6 volt to the receiver by power source and make a receiver turn on at no signal (Station). Connect a volt-meter (range; 1V) between two points A & B as figured out. Adjust the semi-fixed resistor so as to obtain 0.3 volt deflection.

(2) **IF. and RF. alignment**

Apply volt-meter across the voice coil.
Volume control should be at maximum position. Output of signal generator should be not higher than necessary to obtain proper output reading in order to avoid AGC function.

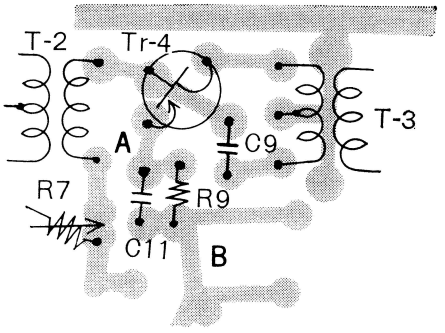

STEP	SIGNAL GENERATOR COUPLING	SIGNAL GENERATOR FREQUENCY	RADIO DIAL SETTING	ADJUST FOR MAXIMUM OUTPUT
** IF ALIGNMENT*				
1	Radiate signal through the loop antenna, which connected with signal generator output cable.	455 Kc	Lower end	T-3 T-2 T-1
** MEDIUM WAVE ALIGNMENT*				
2	Radiate signal through the loop antenna, which connected with signal generator outpnt cable.	520 Kc	Lower end	L-2
3		1680 Kc	Upper end	osc. trim. Ct-2
4		Repeat steps 2 and 3		
5		600 Kc	600 Kc	L-1
6		1400 Kc	1400 Kc	ant. trim. Ct-1
7		Repeat steps 5 and 6		

PARTS LIST

Stock No.	Description		Q'ty
TRANSISTORS			
2SA203	Tr-1	A (B)	1
2SA202	Tr-3	AA	1
2SA203	Tr-2, 4	AA	2
2SB185	Tr-5, 6	AA	2
2SB22	Tr-7, 8		2
DIODES & THERMISTOR			
1S188	D-1		1
SDT-09	TH-1		1
R-S1559	D-2, 3		2
COILS			
R-S85197	Antenna coil complete	L-1	1
R-W8540	Oscillator coil	L-2	1
TRANSFORMERS			
R-W5T008	IF. transformer	T-1	1
R-W5T009	〃	T-2	1
R-W5T043	〃	T-3	1
R-W6181	Input transformer	T-4	1
R-W6560	Output transformer	T-5	1
R-S85249	Power transformer complete		1
R-W7517	〃	T-6	1
R-S3531	AC. cord complete		1
CONTROLS			
R-C1516	Variable capacitor		1
R-S4106	Slide switch		1
R-R11011	Semi-fixed resistor		1
R-R116556	Variable resistor		1
LOUDSPEAKER			
R-S6576	Speaker		1
ELECTROLYTIC CAPACITORS			
R-C9079	10μF/3V	C16	1
R-C9080	30μF/3V	C6, 17, 18	3
R-C9105	30μF/6V	C19	1
R-C9077	200μF/6V	C20	1
R-C9092	500μF/15V	C23	1
R-C9081b	50μF/9V	C4	1
R-C9115	1μF/10V	C14	1

Symbol No.	Description				Q'ty
RESISTORS					
R9	Carbon & Solid	820 ohm	±10%	¼W	1
R19	〃	470 ohm	〃	〃	1
R20	〃	390 ohm	±20%	〃	1
R12, 21	〃	220 ohm	〃	¼-½W	2
R26	〃	220 ohm	〃	1 W	1
R10	〃	220 ohm	±10%	¼W	1
R23	〃	150 ohm	〃	〃	1
R25	〃	1 ohm	〃	¼-½W	1
R13	〃	33 kohm	〃	¼W	1
R24	〃	39 kohm	〃	〃	1
R17	〃	15 kohm	〃	〃	1
R4	〃	8.2 kohm	〃	¼-½W	1
R18	〃	3.3 kohm	〃	¼W	1
R1, 11. 14	〃	5.6 kohm	〃	〃	3
R3, 15	〃	4.7 kohm	〃	〃	2
R22	〃	2.2 kohm	〃	¼-½W	1
R8	〃	1.8 kohm	〃	¼W	1
R2, 5	〃	1.5 kohm	〃	〃	2
R6	〃	1.2 kohm	〃	〃	1
R16	〃	1 kohm	〃	〃	1
CAPACITORS					
C5	Mylar	0.0022μF	±20%	25-50V	1
C3	〃	0.0033μF	〃	〃	1
C13	〃	0.0068μF	〃	〃	1
C1, 12	〃	0.01μF	〃	〃	2
C21, 22	〃	0.0033μF	〃	〃	2
C15	〃	0.01μF	〃	〃	1
C2, 8, 10, 11	Ceramic	0.02μF	+80−20%	〃	4
C9	〃	10pF	±10%	25V	1
C7	〃	13pF	〃	〃	1

Stock No.	Description	Q'ty
MISCELLANEOUS		
R-S6536	Earphone complete	1
R-S2040	Earphone socket	1
R-S23275	Eyelet	4
R-485117	Cabinet	1
R-325227a	Front panel	1
R-275033	Insert screw	7
R-325317	Dial cover	1
R-265731	Front plate (SANYO)	1
R-265732	Indication plate (tuning, volume)	1
R-265733	Dial plate	1
R-115547	Rail	1
R-S85251	Pointer complete	1
R-111025	Fixing metal for tuning rope	1
R-245115	Stud nut	1
R-245338	〃	3
R-115146	Earphone washer	1
R-325318	Fixing part for battery terminal	1
R-325072	Plastic ring for earphone socket	1
R-115295	Battery terminal (+)	1
R-S85165	〃 complete (−)	1
R-115297a	Battery terminal (+)	1
R-S85166a	〃 (−) complete	1
R-375014	Battery pull out ribbon	1
R-325106	Power cord holder	1
R-265330	Decoration metal for TU & VR knob	2
R-35170	Battery tube	1
R-475568	Specification sheet	1
R-475384	Battery sheet	1
R-325320	TU. & VR. knob	2
R-265328	Decoration metal for TU & VR. knob	2
R-415304	Printed circuit board	1
R-115548	Chassis	1
R-115549	Fixing metal for slide switch	1
R-325319	Case for power cord	1
R-S85252	Tuning shaft complete	1
R-245057a	Pulley shaft	3
R-275025	Pulley	3
R-445054	VC. cushion	1
R-32324	Drum	1
R-155026	Coil spring	1
	Tuning rope (0.3×800)	1
R-265734	Indication plate for slide switch	1

Description	Q'ty
Hexagon nut (3×30) Front cover, Dial cover & Cabinet	2
Round head screw (3×4) Fixing metal for slide SW.	1
Pan head screw (3×4) Chassis	1
〃 (〃) Indication plate	2
Round head screw (3×4) VC.	3
〃 (3×6) Fixing metal for slide SW.	1
Pan head screw (3×6) Case for power cord	2
Round head screw (3×8) Antenna	2
Pan head screw (3×20) Power cord holder	1
Round head screw (2.6×8) Drum	1
Pan head screw (3×8) Battery terminal	4
Oval fillister head screw (3×5) Chassis & P.C.B.	1
〃 (〃) P.C.B.	3
Round head screw (3×4) Pointer	1
Hexagon nut (M3) Power source trans.	1
〃 (M3) Chassis	1
〃 (M3) Dial cover, Front panel & Cabinet	2
〃 (M8 T3 P0. 75) Tuning shaft	1
Pan head tapping screw (3×8) Power source trans.	1
〃 (〃) Battery terminal	4
〃 (3×10) SP & Front panel	4
Volt nut washer (3φ) Dial cover, Front panel & Cabinet	1
〃 (3φ) Battery terminal	1
〃 (3φ) Power cord holder	2
〃 (3φ) Battery terminal	4
〃 (3φ) SP. & Front panel	4
〃 (3φ) Front panel, Cabinet & Stud nut	4
〃 (3φ) Case for power cord	2
Washer (3.2×10×0.5t) Antenna	2
〃 (3φ) VC.	3
Spring washer (M2.6) Drum	1

7-20145 Printed in Japan

PARTS LOCATON

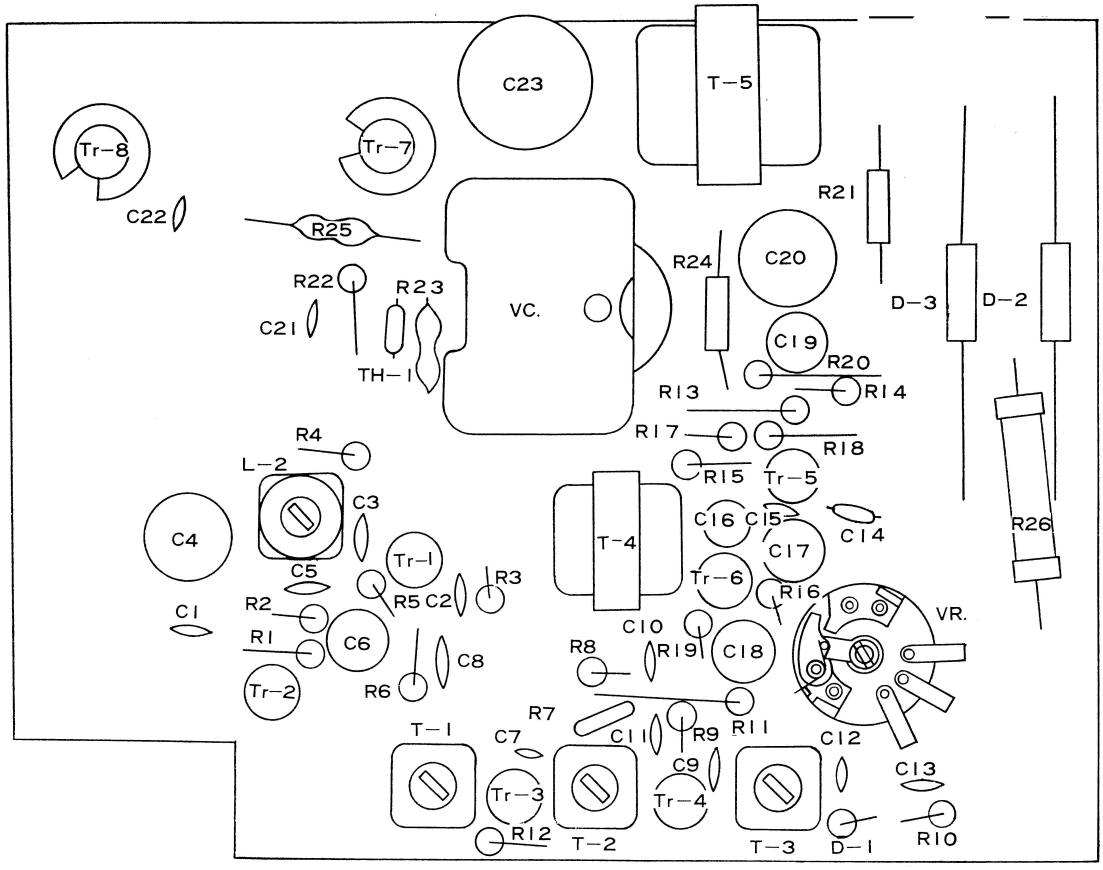

CIRCUIT DIAGRAM

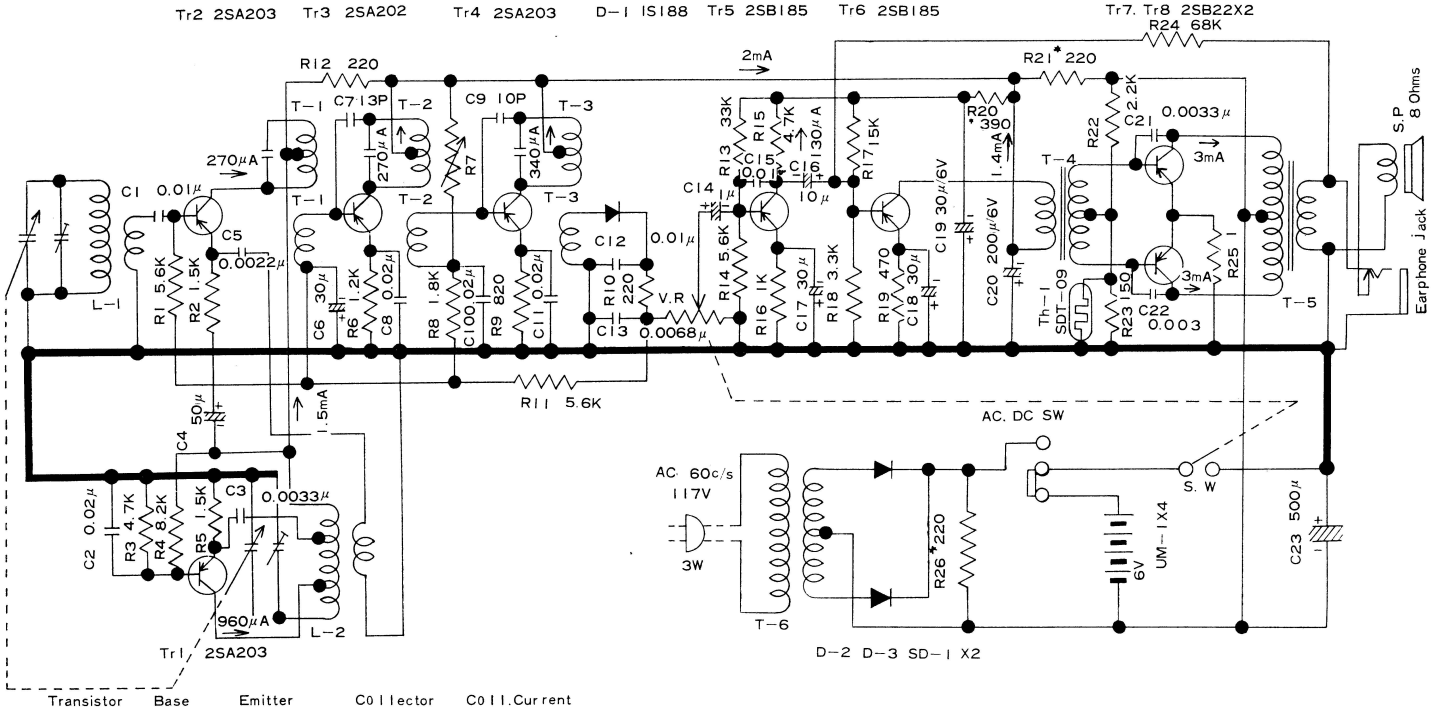

Transistor	Base	Emitter	Collector	Coll.Current
Tr1	1.4V	1.45V	4.7V	960μA
Tr2	0.3V	0.37V	4.7V	270μA
Tr3	0.37V	0.3V	5.1V	270μA
Tr4	0.44V	0.4V	5.1V	340μA
Tr5	0.17V	0.1V	4.2V	130μA
Tr6	0.73V	0.65V	4.6V	1.4mA
Tr7.8	0.18V	0.06V	6.0V	3 mA
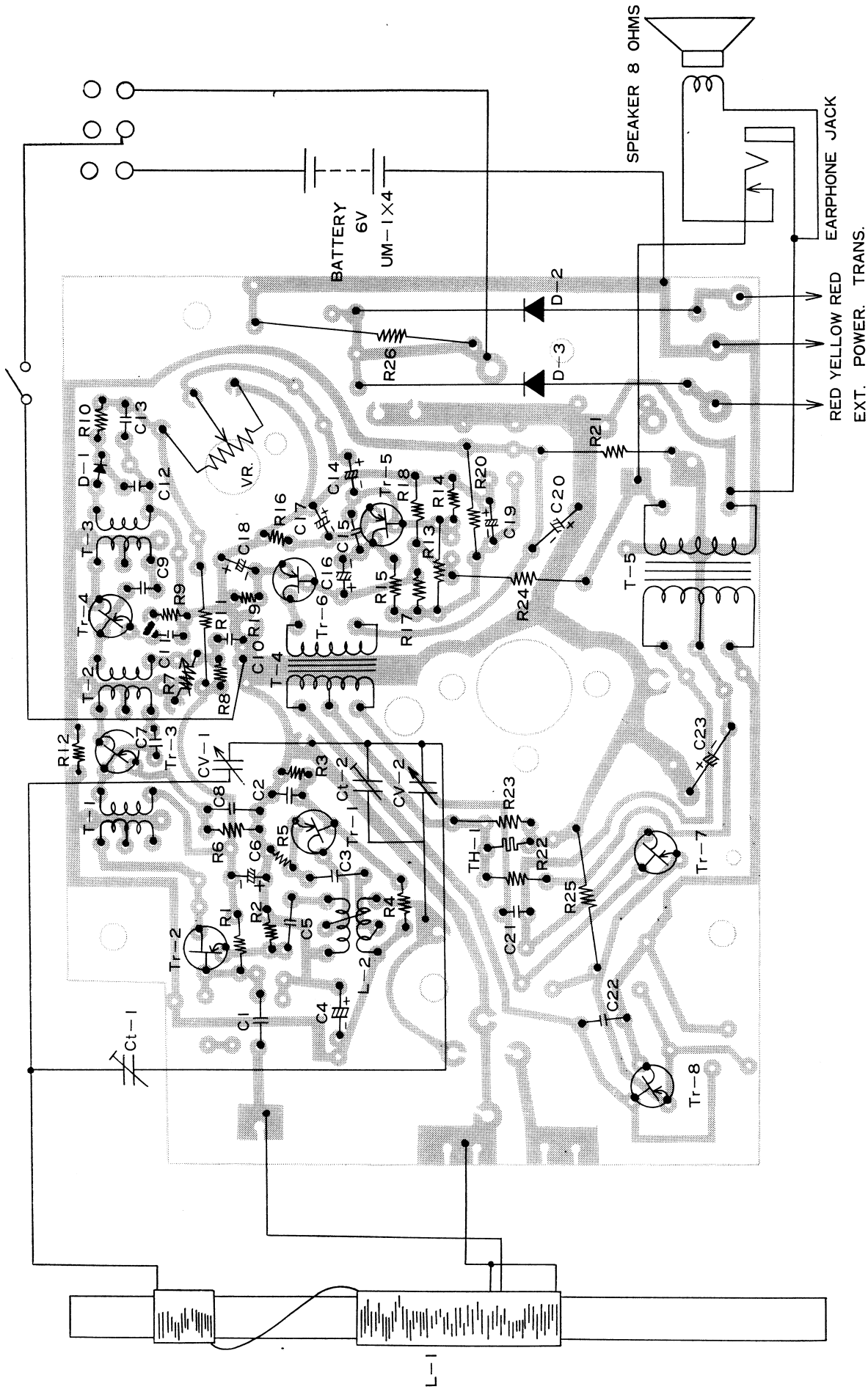
INTER PARTS WIRING ILLUSTRATION