SANYO

8-transistor, AM Auto/Portable Radio

MODEL 8C-810

SERVICE MANUAL

SANYO ELECTRIC CO., LTD.

INTERNATIONAL DIVISION: SANYO ELECTRIC TRADING CO., LTD.
OSAKA, JAPAN

SPECIFICATIONS

Frequency Range.....535–1605 KC
Intermediate Frequency.....455 KC
Sensitivity (for 50mW output).....30μV/m
Output Power .....Maximum 400 mW
Undistorted 250 mW
Speaker .....3½″ permanent dynamic type 8 ohm voice coil impedance
Power Supply .....DC 6 V (four 1½V standard "C-size" batteries) or Car Storage Battery with optional Car Attachment Apparatus
Current Drain .....No signal 25 mA
Maximum 130 mA
Dimensions .....7½″ wide×2½″ high×6¼″ deep
Weight.....3¾ lbs. (1.7 kilograms)

ALIGNMENT PROCEDURES

Adjustment of Collector Current in IF Stage

Adjust the semi-fixed resistor (SVR 100K) for 800μA current circulation thru collector of Transistor (Tr4 2SA203). Apply a voltmeter across Resistor (R15 820 ohms) to get 0.65 volt deflection.

Band Coverage & Tracking

Supply Voltage: DC 6V (with four dry batteries installed).
Dummy Load: 8 ohms (connected thru earphone jacks).
Auto Switch: in released position.
Output Meter: across Dummy Load.

PROCEDURES	SIGNAL RADIATION	FREQUENCY OF SIGNAL GEN.	DIAL SETTING OF RADIO	COMPONENTS TO BE ADJUSTED FOR MAXIMUM RESPONCE
IF STAGE	IRE Loop	455 KC	Lowest Point	IFT T3, T2 & T1 (double tuned)
BAND COVER	//	540 KC	540 KC	Oscillator Coil L5
	//	1600 KC	1600 KC	Oscillator Trimmer Ct2
TRACKING	//	600 KC	600 KC	Antenna Coil L3 L4
	//	1400 KC	1400 KC	Antenna Trimmer Ct1

Auto Reception

Supply Voltage: DC 13.2V (thru Car Attachment Aparatus with it's voltage select switch in 12V position).
Auto Switch: in depressed position.
Dummy Load: 8 ohms (connected thru earphone jack).
Output Meter: across Dummy Load.

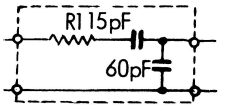

Dummy ANT.

PROCEDURES	SIGNAL RADIATION	FREQUENCY OF SIGNAL GEN.	DIAL SETTING OF RADIO	COMPONENTS TO BE ADJUSTED FOR MAXIMUM RESPONCE
AUTO	Dummy Ant	600 KC	600 KC	Auto Antenna Coil L1 L2
	//	1400 KC	1400 KC	Auto Antenna Trimmer Ct3

PARTS LIST

PART NO.	DESCRIPTION	Q'TY
MECHANIC ITEMS		
R-A31641C	Front Housing Assembly	1
R-A31642C	Back Housing Assembly	1
R-28126e	Escutcheon	1
R-261378a	Instruction Panel —on escutcheon	1
R-38112	Dial Scale	1
R-261387a	Push Button Marking	1
R-A32603C	Battery Compartment Assembly	1
R-261646	Specification Metal	1
R-A8810C	Cabinet Assembly —Composed of above 8 items	1
R-S81275	Handle Assembly	1
R-28121a	Bracket —handle mtg	2
R-35299	Ring — 〃	2
R-241375	Stud Screw — 〃	2
R-	Polyethylene Washer — 〃	2
R-S81176	Pointor	1
R-S81175	Knob	2
R-111685	Mounting Strap —to hold rear of radio	1
ELECTRIC PARTS		
R-W2289a	Antenna Coil —auto L1 L2	1
R-W2288	Antenna Coil —ferrite bar L3 L4	1
R-W8212	Oscillator Coil L5 L6	1
R-W5W028	IF Transformer —double tuned T1	1
R-W5T264	〃 T2	1
R-W5T263	〃 T3	1
R-W6307	Input Transformer T4	1
R-W6298	Output Transformer T5	1
R-C1074	Variable Capacitor Cv1 Cv2	1
R-C0030	Trimmer Ct1 Ct2	1
R-C0037	Trimmer Ct3	1
R-R11670a	Variable Resistor 10K —volume control	1
R-R11011	Semi-fixed Resistor 100K	1
R-S6406①	Speaker 3½″ 8 ohms	1
R-S6365	Earphone	1
R-S1202	Pilot Lamp	1
R-S4348	Push Button Switch	1
R-S2166	Connector Socket —8 contact	1
R-S2139	Jack —earphone	1
R-S81178b	Battery Contact Assembly	1
R-S81177a	Battery Contact Assembly (w/ jumper leads)	1
R-S3008	Lug —lead clamp	1
2SA324	Transistor (black coloring) Tr1	1
2SA321	〃 (〃) Tr2	1
2SA202	〃 (B2 or C2 class) Tr3	1
2SA203	〃 (B3 class) Tr4	1
2SB171B	〃 Tr5 Tr6	2
2SB22	〃 (blue or yellow) Tr7 Tr8	2
1S188	Diode D1 D2	2
SDT-09	Thermistor	1

PART NO.	DESCRIPTION
ELECTROLYTIC CAPACITORS	
R-C9132	10μF 30V C11
R-C9078	5μF 6V C19 C21 C20
R-C9133	30μF 3V C22 C24
R-C9143	200μF 6V C25 C28

SYMBOL NO.	DESCRIPTION			
FIXED VALUE RESISTORS				
R1 R11	2.2K	ohms	±10%	¼W
R2 R25	27K	〃	〃	〃
R3 R15	820	〃	± 5%	〃
R4 R13	560	〃	〃	〃
R5	3.3K	〃	±10%	〃
R6	22K	〃	〃	〃
R7 R24	330	〃	〃	〃
R8	2.2K	〃	± 5%	〃
R9	560	〃	〃	〃
R10	1.5K	〃	±10%	〃
R12 R16	5.6K	〃	〃	〃
R14	100K	〃	〃	〃
R17	560	〃	〃	〃
R18 R22	12K	〃	〃	〃
R19	82K	〃	〃	〃
R20	820	〃	±10%	〃
R21	3.9K	〃	〃	〃
R23	39K	〃	〃	〃
R26	150	〃	〃	〃
R27 R31	1.8K	〃	± 5%	〃
R28	100	〃	±10%	〃
R29	2.7	〃	± 5%	〃
R30	1.8K	〃	±10%	〃

SYMBOL NO.	DESCRIPTION				
FIXED VALUE CAPACITORS					
C1 C30	10pF	±10%	50V	Ceramic	
C2	0.003μF	+80%	〃	〃	Disc
C3 C5 C12 C13 C14 C31	0.04μF	+80%	〃	〃	Disc
C4 C17 C18 C32	0.01μF	+80%	〃	〃	
C6	0.002μF	+30%	50V	Mylar	Square
C7	20pF	±10%	〃	Ceramic	
C8	300pF	〃	〃	Styrol	
C9	5pF	±0.25pF	〃	Ceramic	
C10	12pF	±10%	〃	〃	
C15	8pF	±0.5pF	〃	Ceramic	
C16	0.02μF	+80%	〃	〃	Disc
C23	200pF	〃	〃	〃	〃
C26 C27 C33	0.05μF	〃	〃	〃	〃

Printed in Japan

CIRCUIT DIAGRAM

Tr-1 2SA324 Tr-2 2SA 321 Tr-3 2SA202 Tr-4 2SA203 Tr-5 2SB171 (B) Tr-6 2SB171 (B)

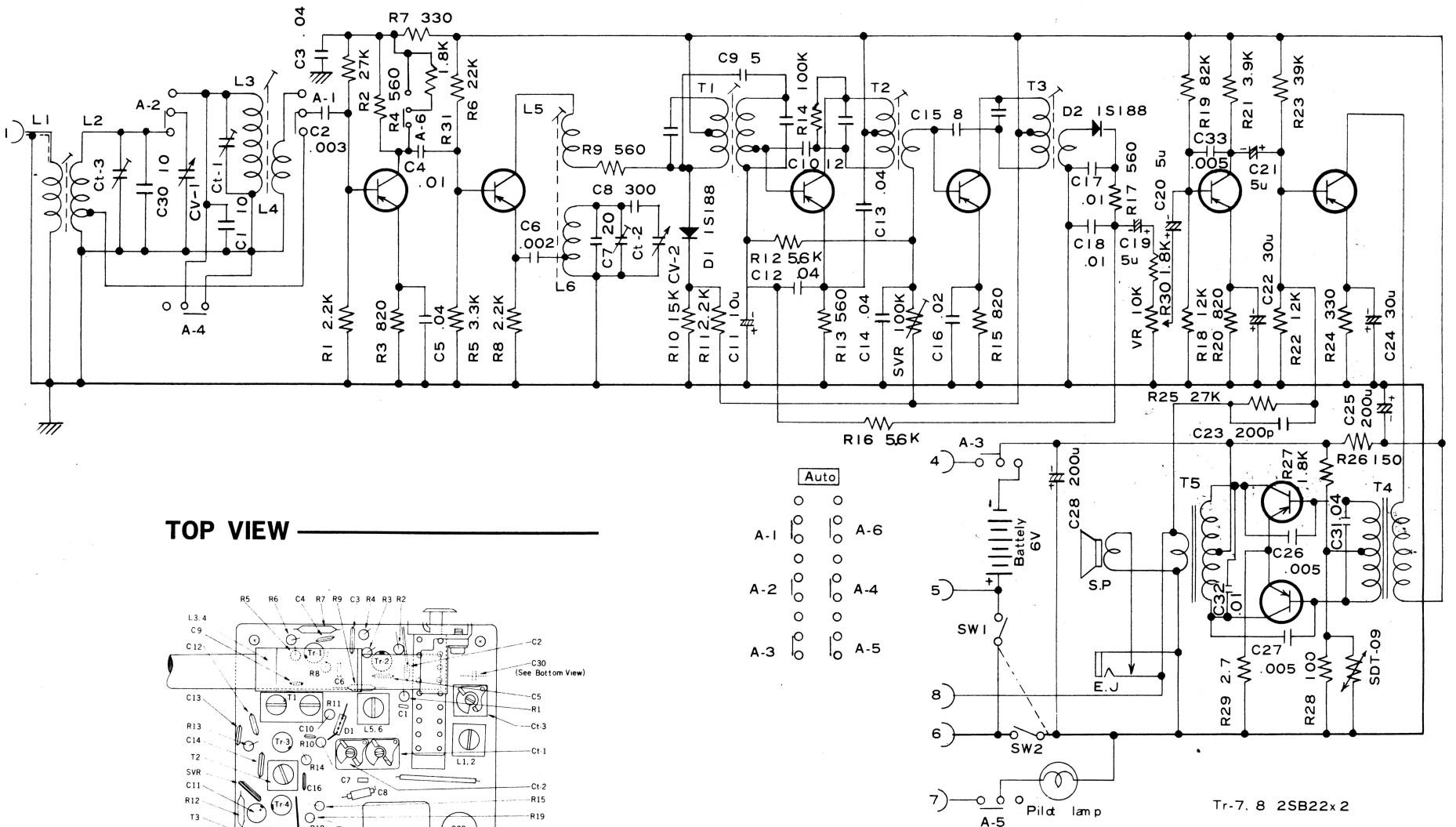

TOP VIEW

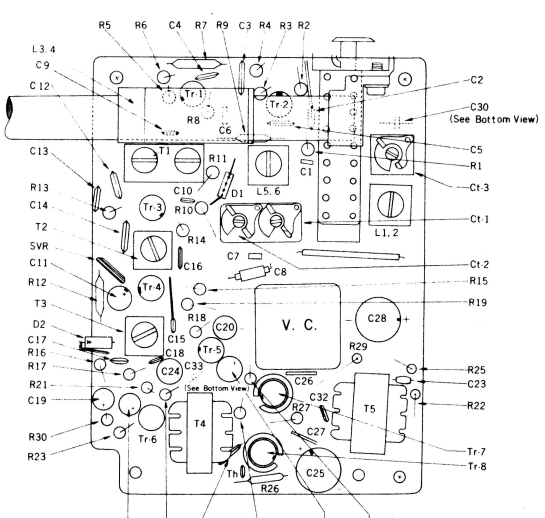

Note: All capacitors with decimal values are in uF.
All capacitors with whole number values are in uuF (pF) unless other-wise specified.
All resistance values in ohms. K = 1,000 ohms.
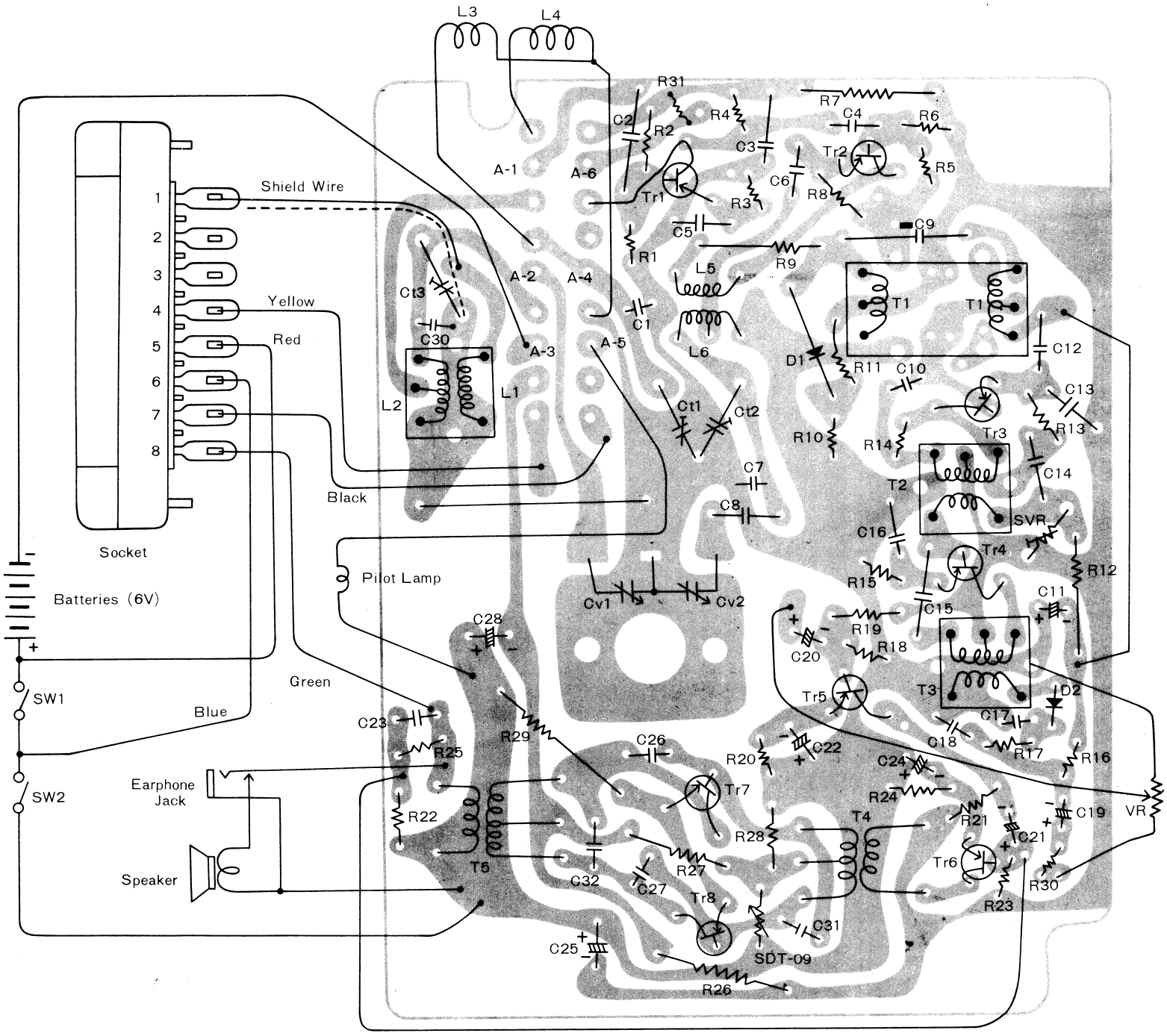
INTER-PARTS WIRING