SANYO

7-transistors Portable & Home Radio

MODEL 7S-121

SERVICE MANUAL

SANYO ELECTRIC CO., LTD.
INTERNATIONAL DIVISION: SANYO ELECTRIC TRADING CO., LTD.
OSAKA, JAPAN.

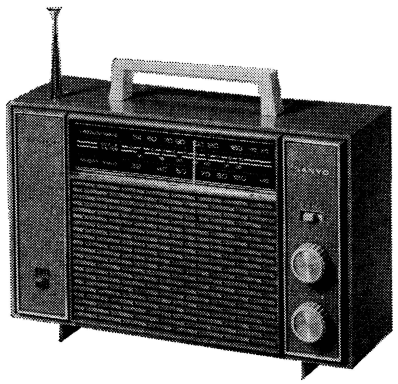

SPECIFICATIONS

Frequency Range ..... MW 530 - 1,605 Kc
SW 3.2 - 12 Mc
Intermediate Frequency ..... 455 Kc
Transistors ..... 2SA222 Frequency converter
2SA202 1st IF. amplifier
2SA201 2nd IF. amplifier
2SB185 ×2 AF. amplifier
2SB22 ×2 Power amplifier
Diode ..... 1S188 Detector & AGC.
Thermistor ..... SDT-09 Temperature compensator
Sensitivity 10mW output ..... MW 30 μV/m
SW 40 μV/m

Output Power ..... Maximum 1000 mW
Undistorted 550 mW
Signal to Noise Ratio ..... 5mW output at 5mV/m input
MW 33 dB SW 30 dB
Loudspeaker ..... 6″×4″ permanent dynamic speaker
Voice coil impedance 8 ohm
Current Drain ..... Maximum 240 mA
No signal 14 mA
Power Source ..... 6V UM-1×4
Dimensions ..... 11″ width×7⅜″ height×3¾″ depth
Weight ..... 3⅜ lbs.

ALIGNMENT PROCEDURES

Alignment of the Semi-fixed resistor
Apply 6 volt to the receiver and the make a receiverat a no signal (Station).
Connecte volt-meter (range; 1V) between two points A & B as figured out.
Adjust the semi-fixed resistor so as to obtain 0.5 volt deflection.

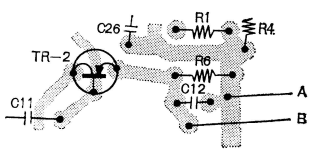

IF and RF alignment
Apply volt-meter across the voice coil.
The volume control should be at maximum position. Output of the signal generator should be not higher than necessary to obtain a proper output reading in order to avoid AGC function.

STEP	SIGNAL GENERATOR COUPLING	SIGNAL GENERATOR FREQUENCY	RADIO DIAL SETTING	ADJUST FOR MAXIMUM OUTPUT
	* IF ALIGNMENT			
1	Radiate the signal through the loop antenna, which is connected with the signal generator output cable.	455 Kc	Lower end	T - 3 T - 2 T - 1
	* MEDIUM WAVE RF ALIGNMENT			
2	Radiate the signal through the loop antenna, which is connected with the signal generator output cable.	520 Kc	Lower end	L - 4
3		1680 Kc	Upper end	MW. osc. trim. Ct-4
4		Repeat steps 2 and 3		
5		600 Kc	600 Kc	L - 2
6		1400 Kc	1400 Kc	MW. ant. trim. Ct-2
7		Repeat steps 5 and 6		
	* SHORT WAVE RF ALIGNMENT			
8	Radiate the signal through the loop antenna, which is connected with the signal generator output cable.	3.1 Mc	Lower end	L - 3
9		12.4 Mc	Upper end	SW. osc. trim. Ct-3
10		Repeat steps 8 and 9		
11		4 Mc	4 Mc	L - 1
12		11 Mc	11 Mc	SW. ant. trim. Ct-1
13		Repeat steps 11 and 12		

PARTS LIST

STOCK NO.	DESCRIPTION		Q'TY
TRANSISTORS			
2SA222	Tr-1		1
2SA202	Tr-2		1
2SA201	Tr-3		1
2SB185	Tr-4, 5		2
2SB22	Tr-6, 7		2
DIODE & THERMISTOR			
1S188	D-1		1
SDT-09	TH-1		1
COILS			
R-W2645	Antenna coil	L-1, 2	1
R-W8549	Oscillator coil	L-4	1
R-W8548	〃	L-3	1
TRANSFORMERS			
R-W5T008	I.F. transformer	T-1	1
R-W5T009	〃	T-2	1
R-W5T043	〃	T-3	1
R-W6181	Input transformer	T-4	1
R-W6603	Output transformer	T-5	1
CONTROLS			
R-C1523	Variable capacitor		1
R-R116554	Variable resistor		1
R-R11011	Semi-fixed resistor		1
R-S4109	Slide switch		1
LOUDSPEAKER			
R-S6641	Speaker		1
ELECTROLYTIC CAPACITORS			
R-C9078	5μF/6V	C19	1
R-C9080	30μF/3V	C10. 18, 20	3
R-C9077	200μF/6V	C21, 24	2
R-C9115	1μF/10V	C17	1

SYMBOL NO.	DESCRIPTION				Q'TY
RESISTORS					
R20	Solid or Carbon	1 ohm	±10%	¼W	1
R1	〃	22 ohm	±20%	〃	1
R19	〃	100 ohm	±10%	〃	1
R17	〃	220 ohm	±20%	〃	1
R5	〃	270 ohm	±10%	〃	1
R16	〃	390 ohm	〃	〃	1
R7	〃	680 ohm	〃	〃	1
R9	〃	820 ohm	〃	〃	1
R6	〃	1.5 kohm	〃	〃	1
R18	〃	1.8 kohm	〃	〃	1
R13	〃	2.2 kohm	〃	〃	1
R8	〃	4.7 kohm	〃	〃	1
R15	〃	5.6 kohm	〃	〃	1
R12	〃	6.8 kohm	〃	〃	1
R3	〃	10 kohm	〃	〃	1
R14	〃	18 kohm	〃	〃	1
R2, 11	〃	22 kohm	〃	〃	2
R21, 22	〃	56 kohm	〃	〃	2
R10	〃	68 kohm	〃	〃	1
R4	〃	2.7 kohm	〃	〃	1
R23	〃	1 kohm	〃	〃	1
C8	Styrol	1800 pF	± 5%	25-50V	1
C7	Mica	360 pF	〃	25-500V	1
C4, 6	Mylar	0.0047 μF	±20%	25-50V	2
C15, 16	〃	0.01 μF	〃	〃	2
C22, 23	〃	0.015 μF	〃	〃	2
C5	〃	0.022 μF	〃	〃	1
C2	Ceramic	8 pF	±10%	25-50V	1
C13	〃	10 pF	〃	〃	1
C9	〃	15 pF	〃	〃	1
C12, 14	〃	0.04 μF	+80% −20%	〃	2
C28	〃	0.02 μF	〃	〃	1
C26	〃	0.01 μF	〃	〃	1
C11	〃	12 pF	±10%	〃	1
C3	Mylar	0.0022 μF	±20%	〃	1

STOCK NO.	DESCRIPTION	Q'TY
MISCELLANEOUS		
R-S1563a	Rod antenna	1
R-23596	Lug board	1
R-S2540a	EXT. power socket	1
R-12011	Lug	1
R-315237	Cabinet	1
R-32086	Fixing part for back cover	1
R-325329a	Dial	1
R-427181	Back plate	1
R-265757	Badge	1
R-325203	Handle	1
R-275026	Insert nut	2
R-325204a	Cover for Handle	1
R-115564	Rail	1
R-S85256	Pointer complete	1
R-115332	Battery terminal (+)	1
R-255059	〃 (−)	1
R-115565	Fixing metal for Rod ANT.	1
R-325315a	Fixing board for EXT. power	1
R-115566	Fixing metal for P.C.B.	1
R-325330	Tuning knob	1
R-325331	Volume knob	1
R-265758	Decoration metal for TU. & VR. knob	2
R-355197	Spacer	2
R-465135	Back cover	1
R-435083	Net of Back cover	1
R-35171	Battery tube	1
R-415317	Printed circuit board	1
R-115567	Chassis	1
R-115568	Fixing metal for Slide switch	1
R-325332	Knob for Slide switch	1
R-S85257	Tuning shaft complete	1
R-32324	Drum	1
R-155026	Coil spring for Drum	1
R-325017	Pulley	2
R-275024	Pulley shaft	2
R-245134	Pulley	2
R-245119	Pulley shaft	2
R-245324	Fixing shaft for VC.	1
R-445082	VC. cushion	1
R-355074	ANT. holder	2
R-245336	Tuning rope (0.5φ L=1000)	1
	Rope guide	1

R-20135 Printed in Japan

PARTS LOCATIONS

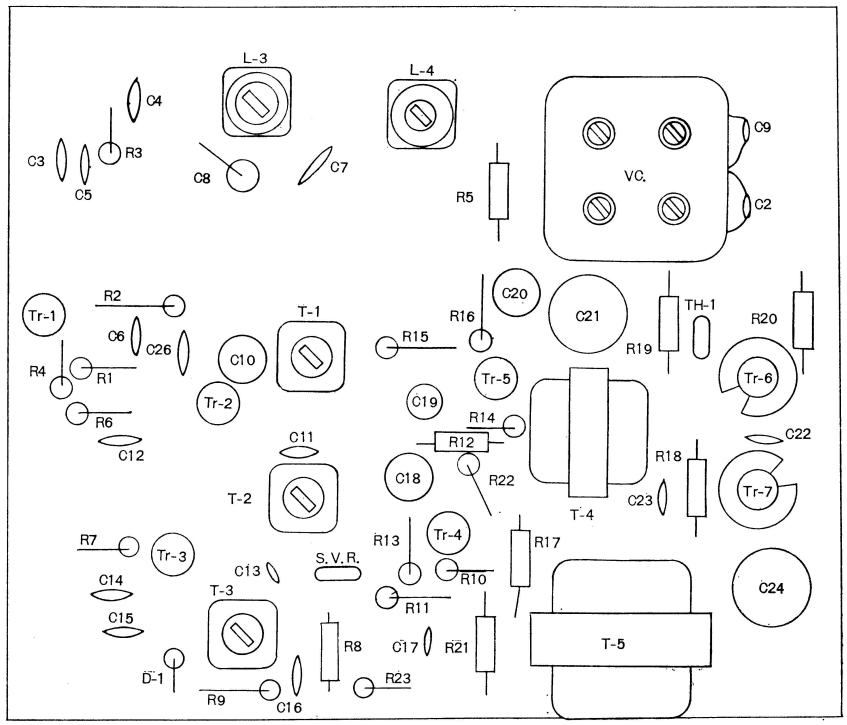

INNER PARTS WIRING ILLUSTRATION

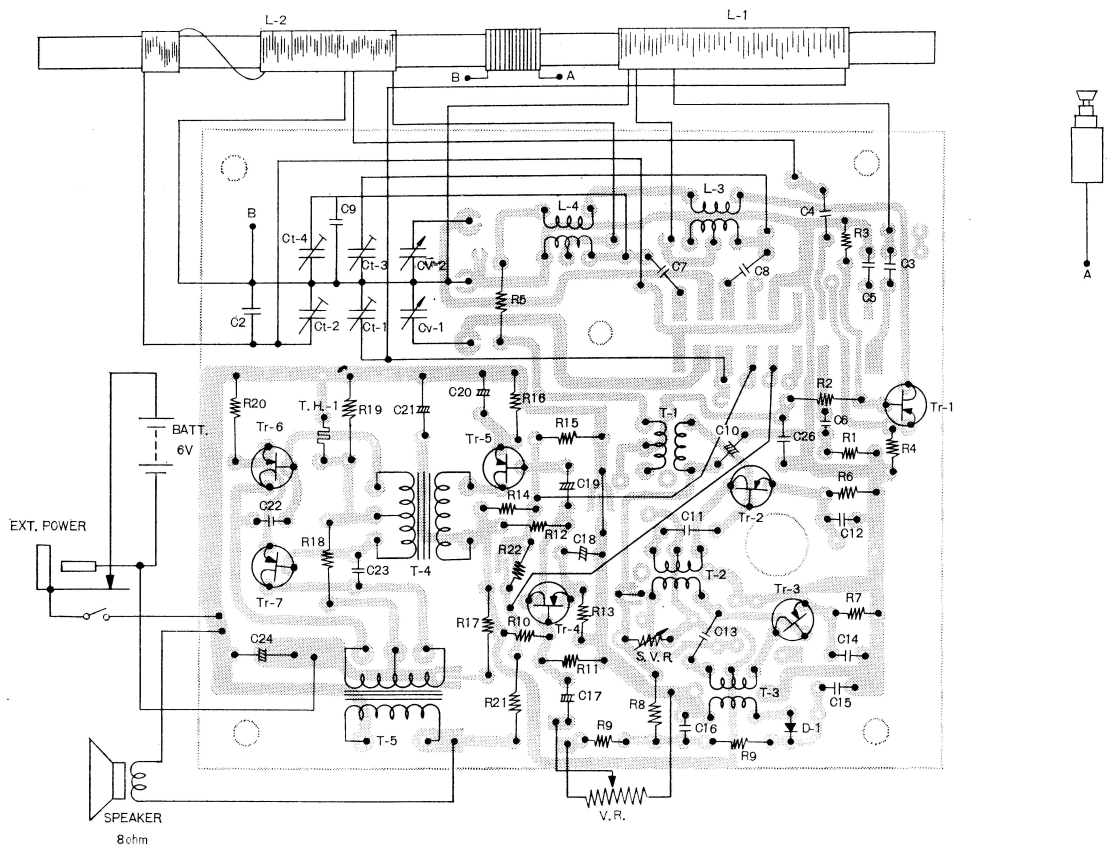

DIAL STRING ARRANGEMENT

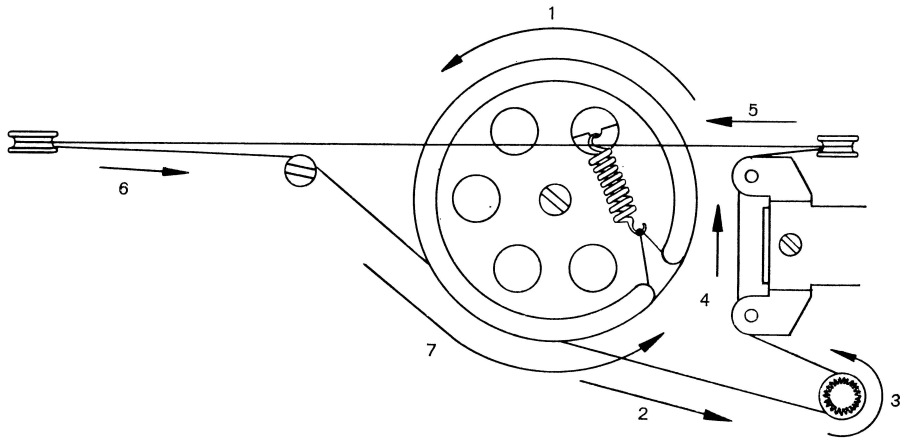

CIRCUIT DIAGRAM

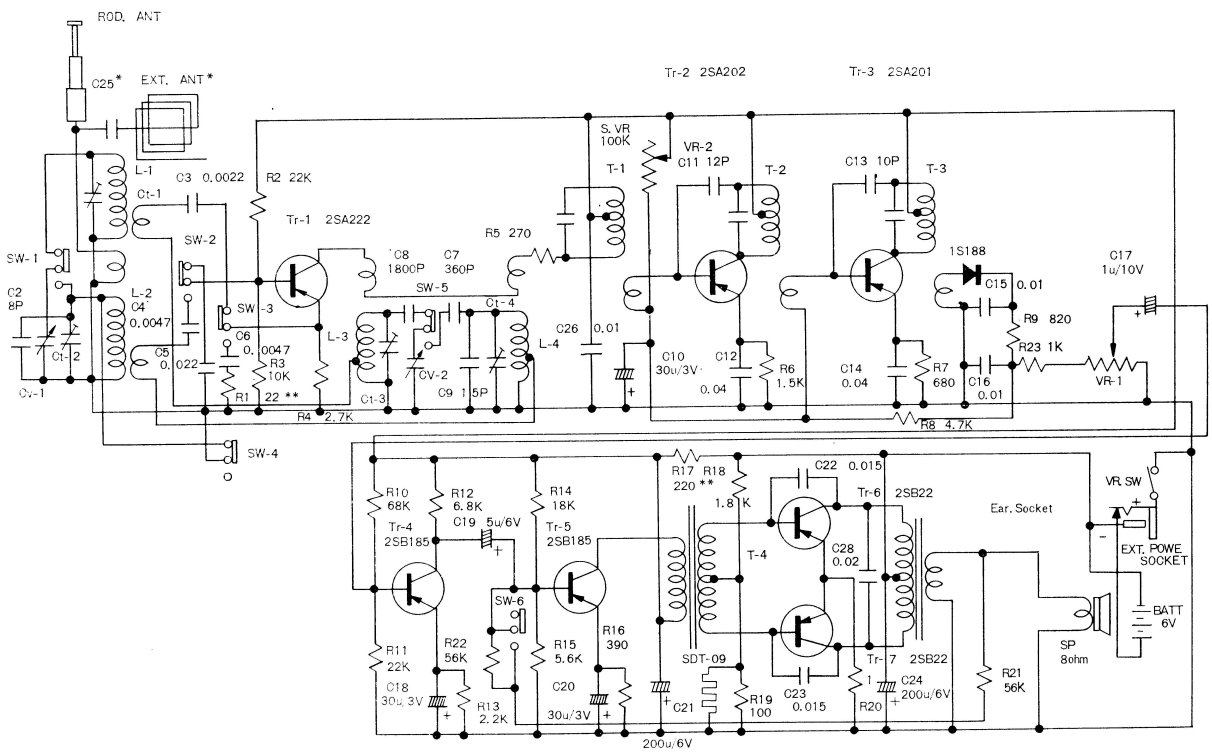

Note

1) All resistance values in "ohm".
   Allowance; ±10% ** marks=20%
2) All capacitance values in "F"(farad).
   no mark=10-6, p=-10-12
3) SW-1——SW-6 as shown, indicate SW band.
4) * mark: Maybe not employed in the actual circuit.

	C	B	E
Tr 1	−4.9	−1.2	−1.45
Tr 2	−5.0	−0.55	−0.50
Tr 3	−5.0	−0.53	−0.47
Tr 4	−1.25	−0.75	−1.15
Tr 5	−4.4	−0.85	−0.75
Tr 6	−6.0	−0.15	——
Tr 7	−6.0	−0.15	——

These readings are taken by circuit tester in D.C. vtg.