SONY MODEL 7R-80

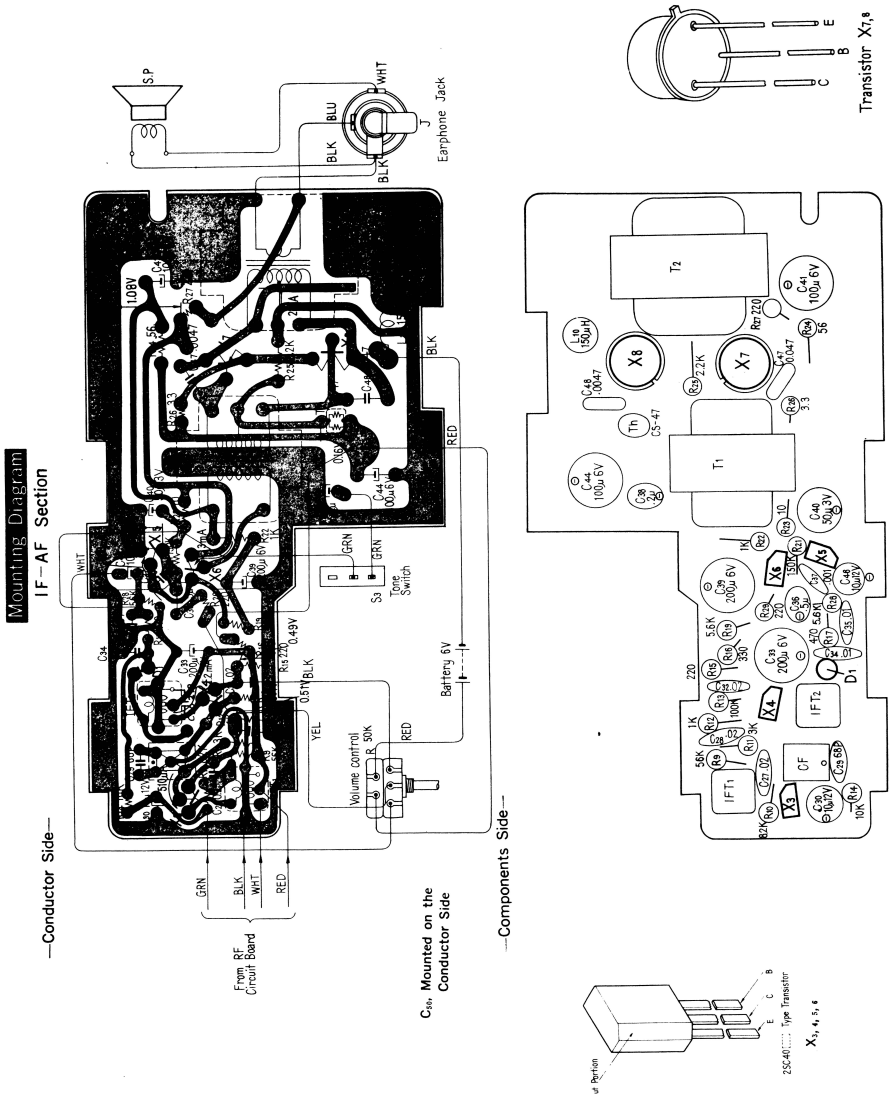

Frequency Coverage and Tracking Adjustment

Adju. Item	SSG (Standard Signal Generator) Coupling	SSG Freq.	Receiver Dial Setting	Connect VTVM	Adjust	Remarks
MW Frequency Coverage	Loop Antenna	520 Kc (1000 c/s 30% AM)	Fully Downward	Across 8Ω Load Resistor	MW OSC Coil (L_3)	Adjust for maximum meter reading. Fine Tuning: Set the red mark on the Fine Tuning Knob in the vertical direction. Volume: Max. Tone: High Power supply: DC 6V
		1,680 Kc (〃)	Fully Upward		MW OSC Trimmer (C_{3-5})	
MW Tracking	—ditto—	620 Kc (〃)	Tune to 620 Kc Signal	—ditto—	MW ANT Coil (L_1)	—ditto—
		1,400 Kc (〃)	Tune to 1,400Kc Signal		MW ANT Trimmer (C_{3-1})	
SW_1 Frequency Coverage	Dummy Antenna SSG 20P Rec	1.65 Mc (〃)	Fully Downward	—ditto—	SW_1 OSC Coil (L_4)	—ditto—
		4.1 Mc (〃)	Fully Upward		SW_1 OSC Trimmer (C_{3-4})	
SW_1 Tracking	—ditto—	1.65 Mc (〃)	Tune to 1.65Mc Signal	—ditto—	SW_1 ANT Coil (L_2)	—ditto—
		4.1 Mc (〃)	Tune to 4.1 Mc Signal		SW_1 ANT Trimmer (C_{3-2})	
SW_2 Frequency Coverage	—ditto—	3.95 Mc (〃)	Fully Downward	—ditto—	SW_2 OSC Coil (L_7)	—ditto—
		9.1 Mc (〃)	Fully Upward		SW_2 OSC Trimmer (C_{3-7})	
SW_2 Tracking	—ditto—	3.95 Mc (〃)	Tune to 3.95 Mc Signal	—ditto—	SW_2 ANT Coil (L_5)	—ditto—
		9.1 Mc (〃)	Tune to 9.1 Mc Signal		SW_2 ANT Trimmer (C_{3-5})	
SW_3 Frequency Coverage	—ditto—	8.6 Mc (〃)	Fully Downward	—ditto—	SW_3 OSC Coil (L_8)	—ditto—
		22.6 Mc (〃)	Fully Upward		SW_3 OSC Trimmer (C_{3-8})	
SW_3 Tracking	—ditto—	8.6 Mc (〃)	Tune to 8.6 Mc Signal	—ditto—	SW_3 ANT Coil (L_6)	—ditto—
		22.6 Mc (〃)	Tune to 22.6 Mc Signal		SW_3 ANT Trimmer (C_{3-6})	

* Dummy Antenna (SW)

Unsolder the White Lead at the Telescopic Antenna Terminal.

Connect the SSG to the White Lead and ground of the receiver through the Dummy Antenna.

Circuit Schematic

X1 2SC403 X3 2SC403 X4 2SC403 D1 IT-23 X5 2SC633 X6 2SC633 X7,8 2SB383X2

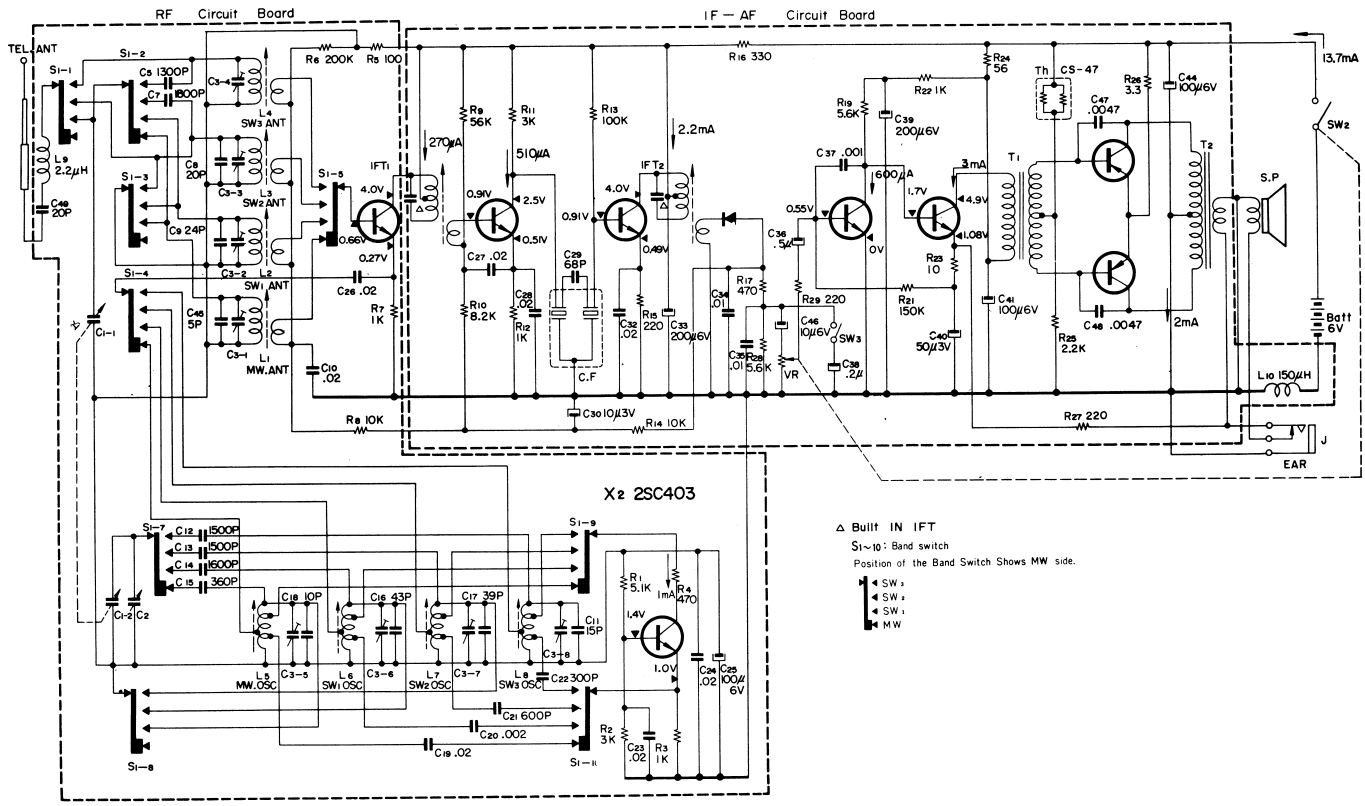

RF Section

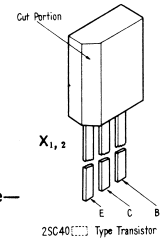

—Components Side—

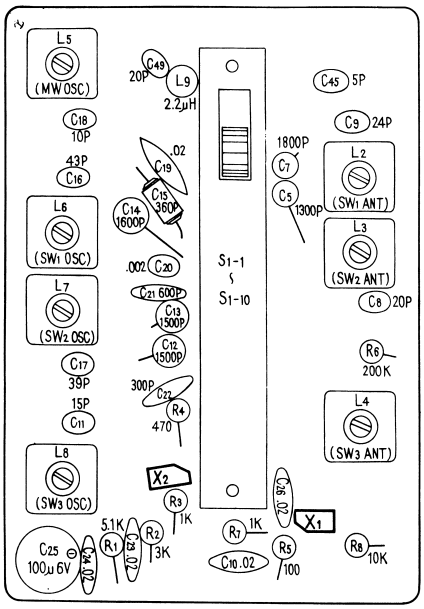

—Conductor Side—

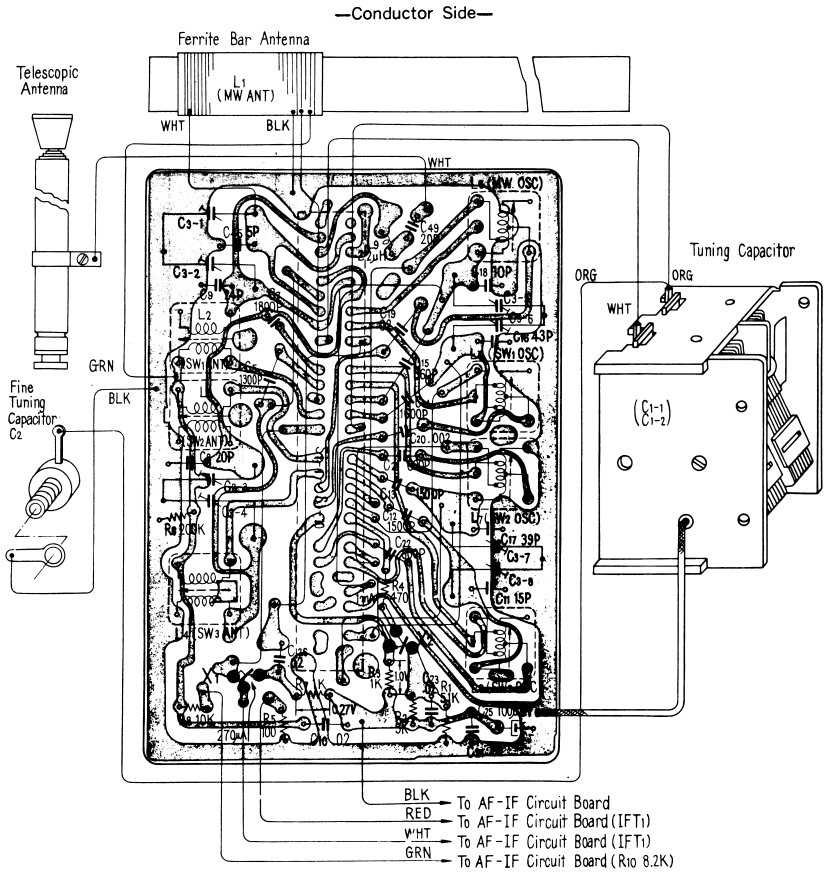

SONY MODEL 7R-80

S12-1

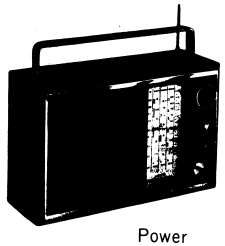

Block Diagram

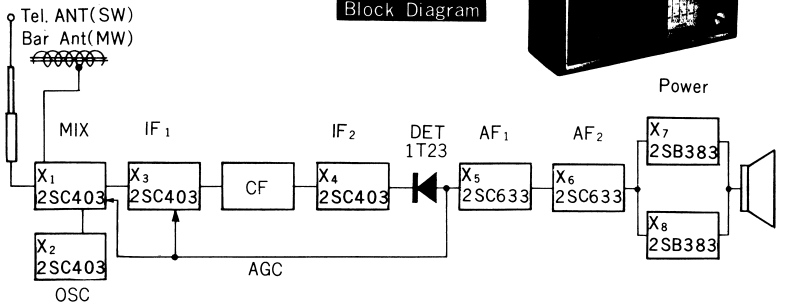

Removal of Chassis

(1) Remove the two Back Cover Holding Screws.
(2) Remove the Tuning, Fine Tuning, Volume Control and Band Selector Knobs by pulling them out.
(3) Remove the Battery Lid and take out all the Batteries.
(4) Remove the two Battery Negative Contact Plate Holding Screws.
(5) Remove the Battery Negative Contact Plate with Battery Cylinder.
(6) Unsolder the white lead at the Telescopic Antenna Terminal.
(7) Remove the Telescopic Antenna from the Cabinet.
(8) Unsolder the two Green leads at the Tone Switch.
(9) Unsolder the two leads at the Speaker.
(10) Remove the Earphone Jack Nut.
(11) Remove the four Screws marked with △ shown in Fig. 2.

Removal of RF Circuit Board

(1) Unsolder the four leads at the R.F. Circuit Board coming from the MW Antenna Coil.
(2) Unsolder the four leads marked with ※ shown in Fig. 2.
(3) Unsolder the three leads at the Tuning Capacitor coming from the RF Circuit Board.
(4) Unsolder the Braided wire marked with ◎ shown in Fig. 2.
(5) Remove the four Screws marked with ○ shown in Fig. 3.
(6) Remove the two Screws marked with □ shown in Fig. 3.

Removal of AF Circuit Board

Remove the Screw marked with ● shown in Fig. 2.

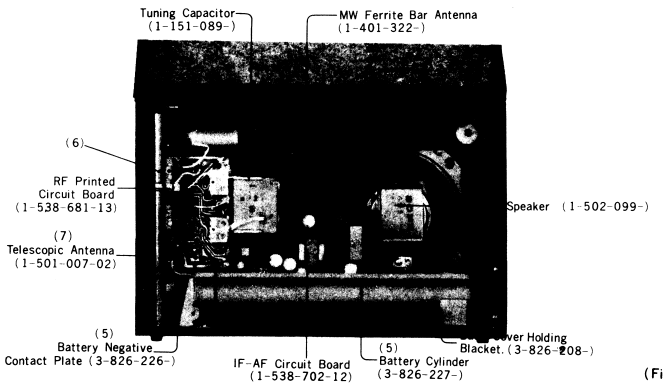

(Fig. 1)

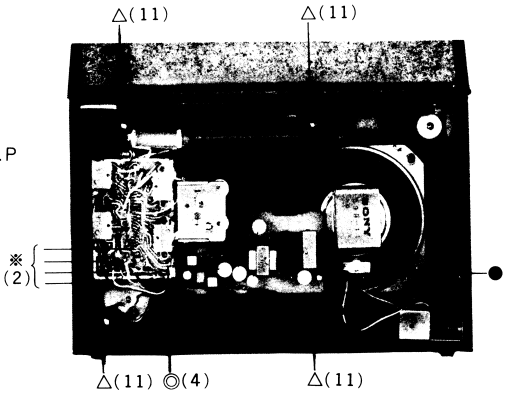

(Fig. 2)

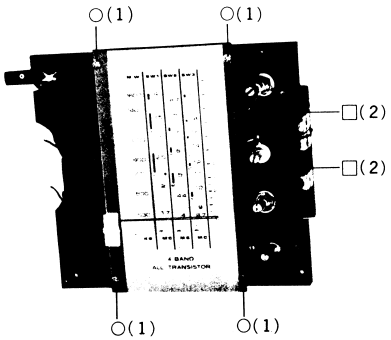

(Fig. 3)

Dial Cord Stringing

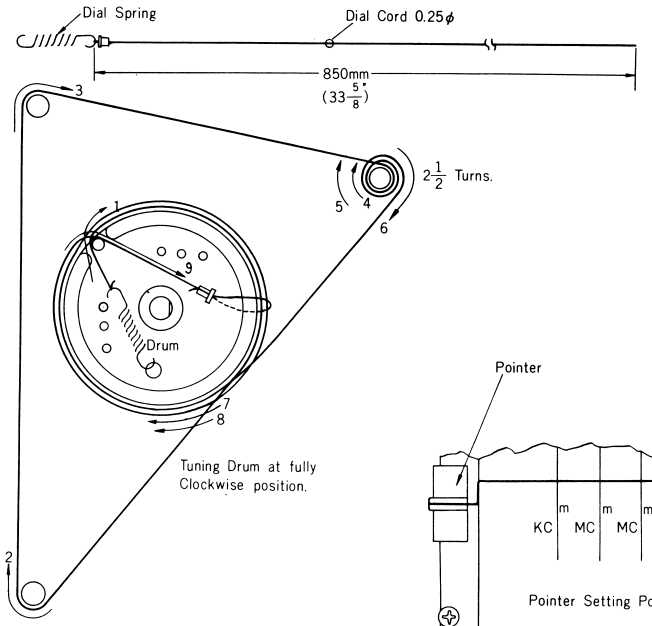

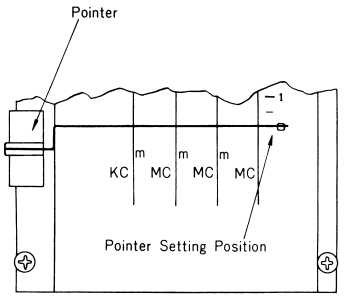

Set the Tuning Shaft at fully Counter-Clockwise position.