SANYO *All-transistor Radio*

Service Manual

MODEL 7L-07

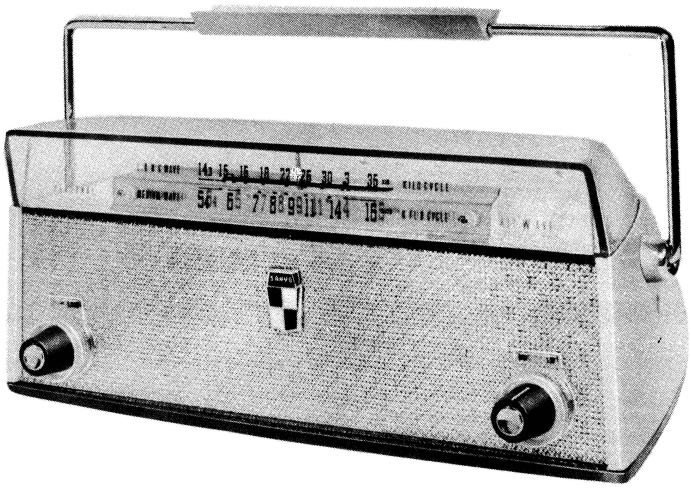

SPECIFICATION

RECEPTION FREQUENCY RANGE
540 – 1,605 kc (MW)
140 – 350 kc (LW)

INTERMEDIATE FREQUENCY
455 kc

TRANSISTOR COMPLEMENT

1×2SA52	Oscillator & Frequecy Converter
1×2SA49	1st IF Amplifier
1×2SA53	2nd IF Amplifier
1×2SB54	1st AF Amplifier
1×2SB54	2nd AF Amplifier
2×2SB56	Power Amplifier

GERMANIUM DIODE & THERMISTOR

1×1N60	Detector & A.G.C.
1×M8601	Temperature Compensation

POWER OUTPUT

Undistorted	150 mW
Maximum	250 mW

RADIATION SENSITIVITY
Lower limit for 10 mW output

MW Band	564 μV/m
LW Band	795 μV/m

BATTERY USED
4 1½-volt size D Flashlight Batteries

CURRENT DRAIN
12 mA – 74 mA

LOUDSPEAKER
3½″×5½″ oval Permanent Dynamic Type
Voice Coil Impedance 3.3 ohms at 1,000 cycles

DIMENSIONS

Width	29.5 cm (11½″)
Height	12.5 cm (5″)
Depth	11.9 cm (4¾″)

NET WEIGHT
1.5 kilo grams or 3 lbs 6 ozs incl. Batteries

SANYO ELECTRIC CO., LTD.

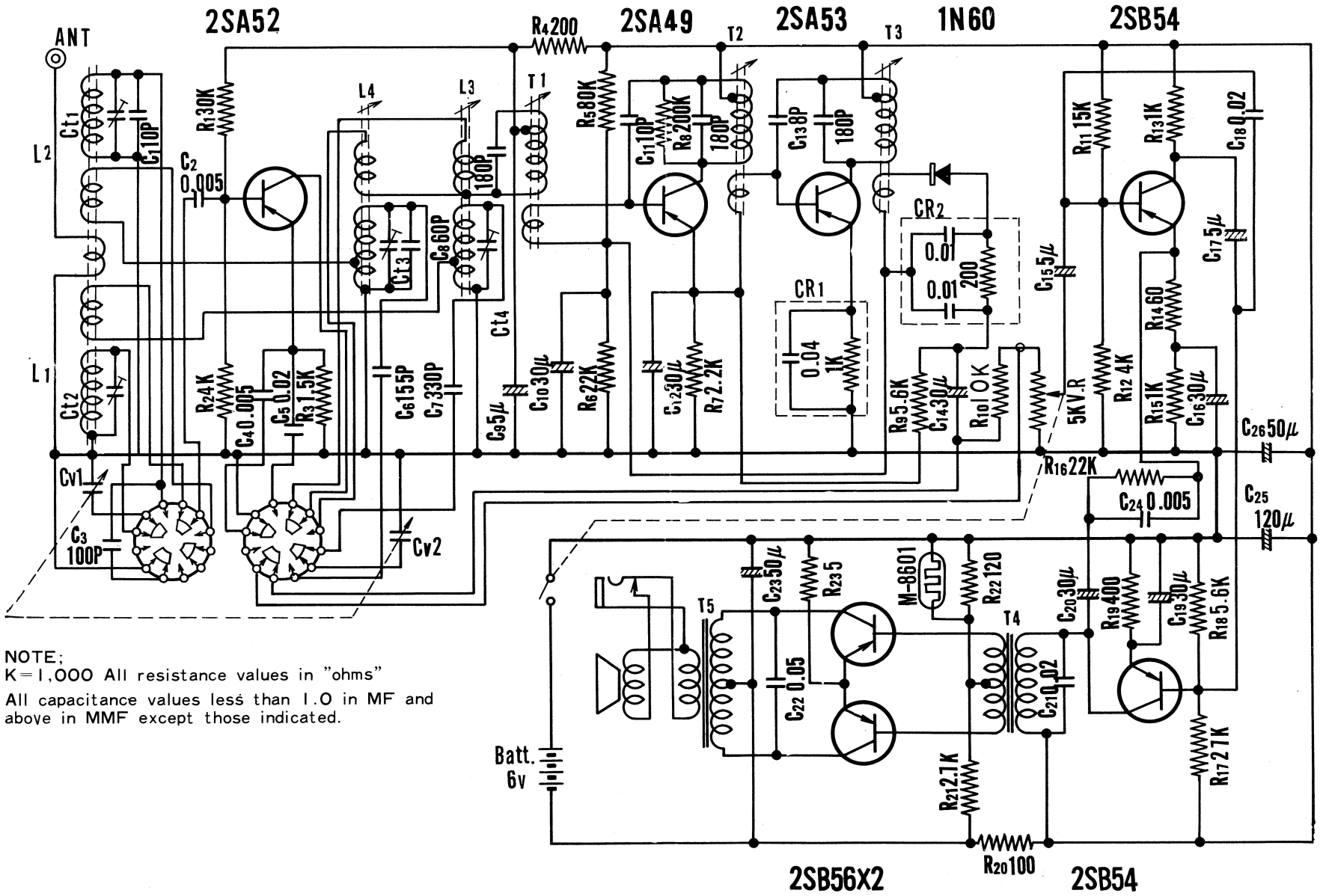

NOTE;
K=1,000 All resistance values in "ohms"
All capacitance values less than 1.0 in MF and above in MMF except those indicated.

PRINTED IN JAPAN

ALIGNMENT PROCEDURE

Output Meter Alignment: Apply volt-meter across the voice coil. Set the volume control to the maximum.

Test Oscillator: Connect low side to the chassis. Output should be no higher than necessary to obtain output reading so as to avoid AGC.

Step	Signal Generator Coupling	Signal Generator Frequency	Radio Dial Setting	Adjust for Maximum Output
1	High side thru 0.1 μf capacitor to antenna stator lug on tuning gang.	455 kc	Tuning gang fully closed.	T 3 T 2 T 1
2	Fashion loop of several turns of wire and radiate signal into loop antenna.	530 kc	Tuning gang fully closed.	L 3
3		1,650 kc	Tuning gang fully open.	Ct 4
4		Repeat Step 2 and 3.		
5		600 kc	600 kc signal	L 1
6		1,400 kc	1,400 kc signal	Ct 2
7		Repeat Step 5 and 6.		
8	Set band selector switch to long wave band.			
9	Fashion loop of several turns of wire and radiate signal into loop antenna.	135 kc	Tuning gang fully closed	L 4
10		360 kc	Tuning gang fully open	Ct 3
11		Repeat Step 9 and 10.		
12		160 kc	160 kc signal	L 2
13		340 kc	340 kc signal	Ct 1
14		Repeat Step 12 and 13.		

PARTS LIST

TRANSISTORS

PART No.	ORIGINAL TYPE	DESCRIPTION
Tr 1	2SA52	Oscillator & Frequency Converter
Tr 2	2SA49	1st IF Amplifier
Tr 3	2SA53	2nd IF Amplifier
Tr 4	2SB54	1st AF Amplifier
Tr 5	2SB54	2nd AF Amplifier
Tr 6	2SB56	Power Amplifier
Tr 7	2SB56	Power Amplifier

GERMANIUM DIODE AND THERMISTOR

PART No.	ORIGINAL TYPE	DESCRIPTION
Det	1N60	Detector & AGC
TH	M8601	Temperature Compensation

CONTROLS

PART No.	STOCK No.	REMARKS
VR	R-R12436	Variable Resistor
VC	R-C1040a	Variable Capacitor
C t	R-C0006	4-gang Trimmer

COILS

PART No.	STOCK No.	DESCRIPTION
L 1, 2	R-W2073	Antenna Coil
L 3	R-W8011	MW Oscillator Coil
L 4	R-W8021	L W Oscillator Coil

TRANSFORMERS

PART No.	STOCK No.	DESCRIPTION
T 1	R-W5T008	I F Transformer "A"
T 2	R-W5T009	I F Transformer "B"
T 3	R-W5T023	I F Transformer "C"
T 4	R-W6070	Input Transformer
T 5	R-W6071	Output Transformer

FIXED RESISTORS

PART No.	RATING OHMS	RATING WATT	TOLERANCE	DESCRIPTION
R 1	30 K	½	± 10%	
R 2	4 K	½	± 10%	
R 3	1.5 K	½	± 10%	
R 4	200	½	± 20%	
R 5	80 K	½	± 5%	
R 6	22 K	½	± 5%	
R 7	2.2 K	½	± 5%	
R 8	200 K	½	± 20%	
R 9	5.6 K	½	± 10%	
R 10	10 K	½	± 10%	
R 11	15 K	½	± 10%	
R 12	4 K	½	± 10%	
R 13	1 K	½	± 10%	
R 14	60	½	± 20%	
R 16	22 K	½	± 20%	
R 17	27 K	½	± 10%	
R 18	5.6 K	½	± 10%	
R 19	400	½	± 10%	
R 20	100	½	± 20%	
R 21	2.7 K	½	± 10%	
R 22	120	½	± 10%	
R 23	5	½	± 10%	
R 15	1 K	½	± 10%	

CAPACITOR/RESISTOR PACKS

PART No.	RESISTOR	CAPACITOR
CR 1	1K ohm 1/10 W ±10%	0.04 μf +80% −20%
CR 2	200 ohm 1/10 W ±10%	0.01 〃 +80% −20%
		0.01 〃 +80% −20%

FIXED CAPACITORS

PART No.	RATING CAP	RATING VOLT	TOLERANCE	REMARKS
C 1	10 pf	25 WV	± 10%	
C 2	0.005 μf	50 WV	+30% −20%	
C 3	100 pf		± 10%	
C 4	0.005 μf	50 WV	+30% −20%	
C 5	0.02 〃	50 WV	+30% −20%	
C 6	155 pf		± 3.5%	
C 7	330 pf	1 KV	± 10%	
C 8	60 〃		± 10%	
C 11	10 〃	25 WV	± 10%	
C 13	8 〃	25 WV	+ 10%	
C 18	0.02 μf	50 WV	+30% −20%	
C 21	0.02 〃	50 WV	+30% −20%	
C 22	0.05 〃	50 WV	+30% −20%	
C 24	0.005 〃	50 WV	+30% −20%	

ELECTROLYTIC CAPACITORS

PART No.	RATING CAP	RATING VOLT	TOLERANCE	REMARKS
C 9	5 μf	6 WV		V Type
C 10	30 〃	6 WV		V Type
C 12	30 〃	6 WV		V Type
C 14	30 〃	6 WV		V Type
C 15	5 〃	6 WV		V Type
C 16	30 〃	6 WV		V Type
C 17	5 〃	6 WV		V Type
C 19	30 〃	6 WV		V Type
C 20	30 〃	6 WV		V Type
C 23	50 〃	9 WV		V Type
C 25	120 〃	10 WV		V Type
C 26	50 〃	9 WV		V Type

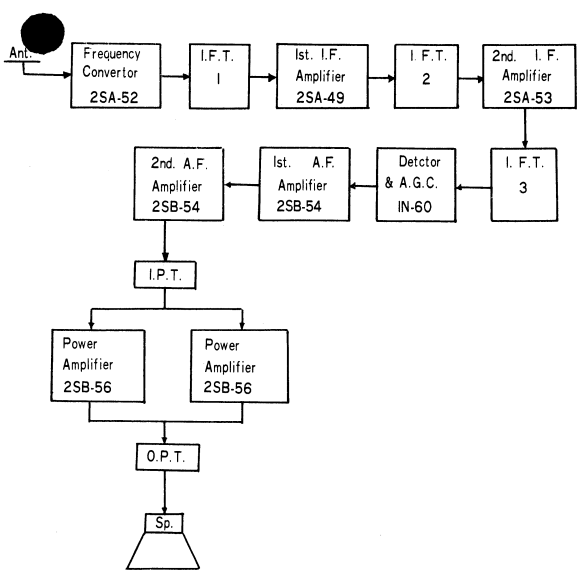

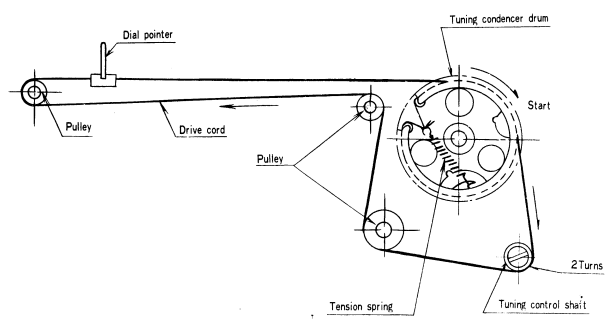

NOTE: Assembly shown with condenser plates full meshed.