SANYO

MODEL
7CW-P20

All-transistor Radio

Service Manual

SPECIFICATION

FREQUENCY RANGE
BC 535-1605 KC/s

INTERMEDIATE FREQUENCY
455 KC/s

POWER SUPPLY
3 Volts (2 Penlight batteries)

CURRENT DRAIN
No Signal·····15 mA
Maximum ·····95 mA

POWER OUTPUT
Undistorted·····100 mW
Maximum·····180 mW

S/N RATIO
28 dB (at 1,000 KC, 1 mV/m input)

LOUD SPEAKER
2″ Permanent dynamic speaker (40 ohms)
Earphone outlet provided

TRANSISTORS
(1) 2SA201·····Frequency converter
(2) 2SA202·····1st IF amplifier
(3) 2SA203·····2nd IF amplifier
(4) 2SB188·····1st AF amplifier
(5) 2SB186·····2nd AF amplifier
(6) 2SB187x2·····Power amplifier (class B push-pull)

DIODE
(1) 1N60·····Diode : Detectror & AGC

DIMENTIONS
Plastic cabinet
width 3¾ inches
Height 3⅝ inches
Depth 1⅜ inches

WEIGHT
10⅘ lbs.

SENSITIVITY
BC 700mV/m (Average for 10 mW output)

SANYO ELECTRIC CO., LTD.

PART NO.	STOCK NO.	DESCRIPTION		

RESISTORS

R 1		18 K ohm	± 5%	¼W
R 2		3.9 K ohm	〃	〃
R 3		1 K ohm	〃	〃
R 4		39 K ohm	〃	〃
R 5		1.2 K ohm	〃	〃
R 6		390 ohm	±10	〃
R 7		270 ohm	〃	〃
R 8		R–CXC–002	〃	〃
R 9		5.6 K ohm	〃	〃
R 10		33 K ohm	〃	〃
R 11		6.8 K ohm	〃	〃
R 12		1 K ohm	〃	〃
R 13		390 ohm	〃	〃
R 14		33 K ohm	〃	〃
R 15		6.8 K ohm	〃	〃
R 16		180 ohm	〃	〃
R 17		47 ohm	±20%	½W
R 18		5.6 K ohm	±10%	¼W
R 19		5.6 K ohm	〃	〃
R 20		150 ohm	〃	〃
R 21		47 K ohm	〃	〃

SPECIFICATIONS SUBJECT TO CHANGE WITHOUT NOTICE.

Printed in Japan

CIRCUIT DIAGRAM

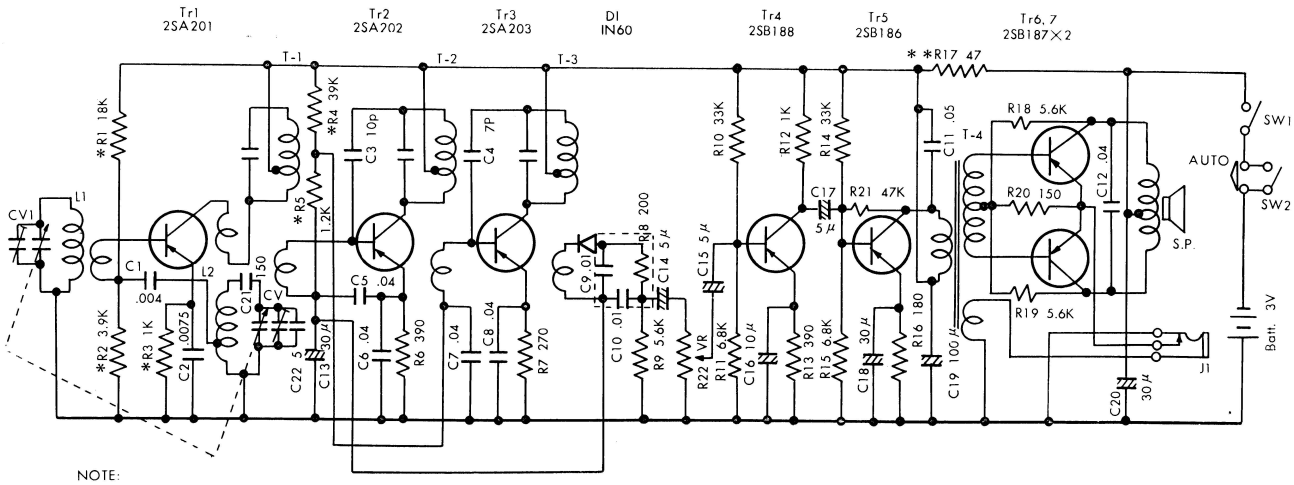

NOTE:
K = 1,000
* mark = ± 5%
** mark = ± 20%
No mark = ± 10%

ALIGNMENT PROCEDURES

Apply volt-meter across the voice coil (or "TEST LEAD-OUT" wires).
Volume control should be at maximum position. Output level of signal generator should be no higher than necessary to obtain output reading in order to avoid AGC function. (Use 1000cps modulation signal)

STEP	SIGNAL GENERATOR COUPLING	SIGNAL GENERATOR FREQUENCY	RADIO DIAL SETTING	ADJUST FOR MAX. OUTPUT
IF ALIGNMENT				
1	Radiate signal through the loop antenna, which connected with signal generator output cable.	455 Kc	lower end	IF transformer T3 T2 T1
BROADCAST RF ALIGNMENT				
2	Radiate signal thraugh the loop antenna, which connected with signal generator output cable.	520 Kc	lower end	Osc coil L2
3		1645 Kc	upper end	Osc trimmer Ct2
4		Repeat steps 2 and 3.		
5		600 Kc	600 Kc	Ant coil L1
6		1400 Kc	1400 Kc	Ant trimmer Ct1
7		Repeat steps 5 and 6.		

PART NO.	STOCK NO.	DESCRIPTION

TRANSISTORS

Tr	1	2SA201	Converter
Tr	2	2SA202-c2	IF amplifier
Tr	3	2SA203-b3	IF amplifier
Tr	4	2SB188	Audio amplifier
Tr	5	2SB186	Driver
Tr	6	2SB187	Power amplifier
Tr	7	2SB187	Power amplifier

COILS

R-W2129		Antenna Coil
R-W8068		Oscillator Coil

TRANSFOMERS

R-W 5T024a		IF Tramsformer -ZLC-144A
R-W 5T025a		IF Tramsformer -ZLC-150A
R-W6167		Input Transformer
R-W 5T094		IF Transformer

CAPACITORS

C	1		0.004 μF ±30% 20% 100WV -square
C	2		0.0075μF 〃 100 〃 〃
C	3		10 PF ±10% 25 〃 -square or disk
C	4		7 PF ±0.5PF 25 〃 〃
C	5		0.04 μF ±80% 20% 25 〃 - square
C	6		0.04 μF 〃 25 〃 〃
C	7		0.04 μF 〃 25 〃 〃
C	8		0.04 μF 〃 25 〃 〃
C	9		R-CXC-002
C	10		R-CXC-002
C	11		0.05 PF ±80% 20% 10WV semi-conductor ceramic
C	12		0.04 μF ±80% 20% 25 〃 -square
C	13		30 μF +150% 10% 3WV -electrolytic
C	14		5 μF 〃 6 〃 〃
C	15		5 μF 〃 6 〃 〃
C	16		10 μF 〃 3 〃 〃
C	17		5 μF 〃 6 〃 〃
C	18		30 μF 〃 3 〃 〃
C	19		100 μF 〃 3 〃 〃
C	20		30 μF 〃 3 〃 〃
C	21		150 PF ±10% 125 〃 -tubular
C	22		5 PF ±0.5 PF 25 〃 -square or disk

PART NO.	STOCK NO.	DESCRIPTION

CONTROLS

R-C1088	Variable capacitor
R-R 11608a	Variable Resistor

SPEAKER

R-S6178	Loud Speaker

DIODE

Di	IS188	Detector

CABINET

1	R-31439	Cabinet -polystyrene
2	R-31440	Back cover -polystyrene
3	R-S8404	Case complete -with metal cover
4	R-32250	Dial
5	R-26506	Decoration metal
6	R-26507	Panel -punched metal
7	R-26508	Specifiaction plate
8	R-S8406	Hinge complete
9	R-S8407	Hinge complete
10	R-24414	Bearing
11	R-S8432	Battery terminal complete
12	R-S8433a	Battery terminal complete
13	R-23578a	Battery terminal
14	R-111388	Clock fixing metal
15	R-121389	Speaker fixing metal
16	R-26528a	Back plate
17	R-23561	Pointer

MISCELLANEOUS

R-39039	Drum
R-41203a	Printed circuit board
R-33313	VR knob
R-24415	Pulley shaft
R-24416	Stud nut
R-24526	Dial shaft
R-33327	Tuning knob
R-24497	Pulley
R-35111	Antenna holder
R-15113a	Coil spring
R-24265	Stud nut
	Dial string
R-S5514	Clock
R-S6250	Earphone complete
R-S4190	Slide switch
R-S2107	Socket

MAIN PARTS TERMINAL IDENTIFICATIONS

ANTENNA COIL

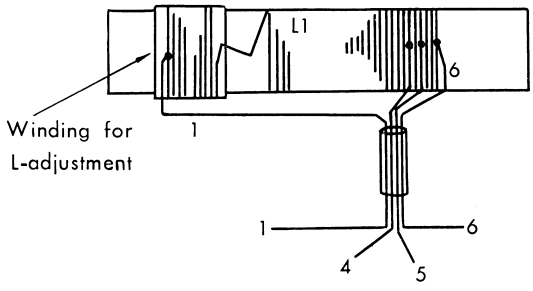

INPUT TRANSFORMER

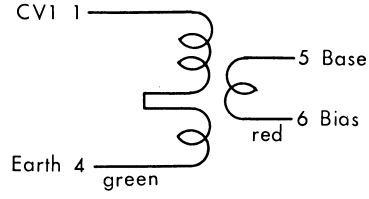

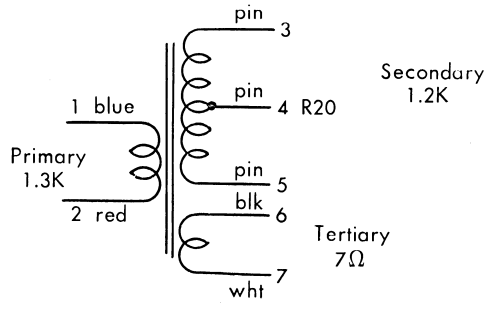

PARTS LAYOUT

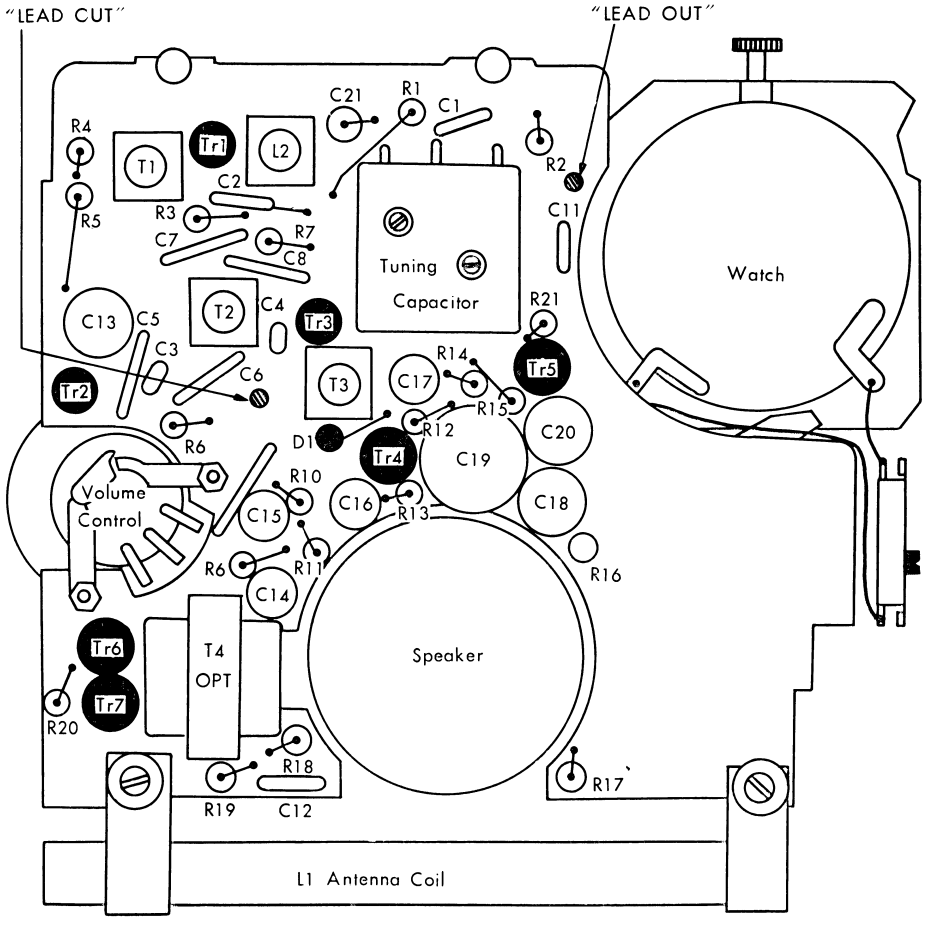

CONSTRUCTIONS

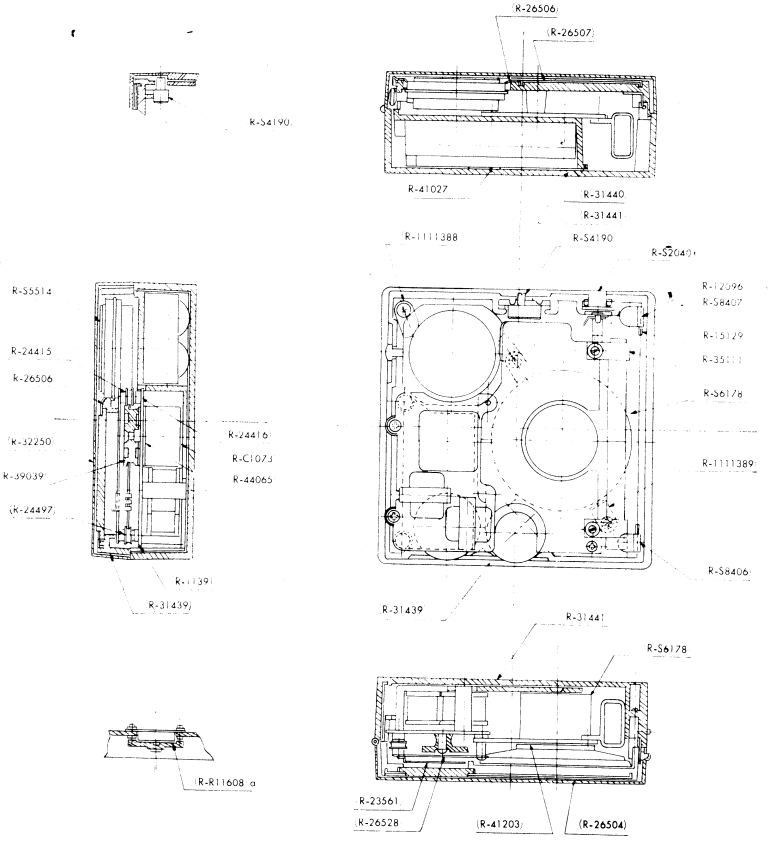
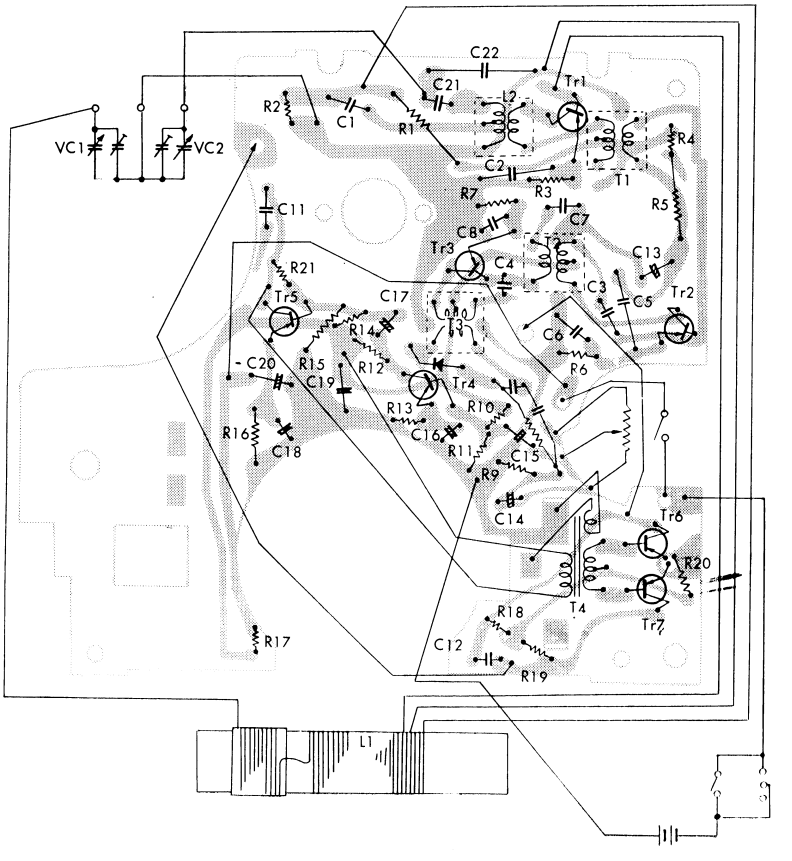
INTER PARTS CONNECTION