"Breville" Battery Broadcast Model 74

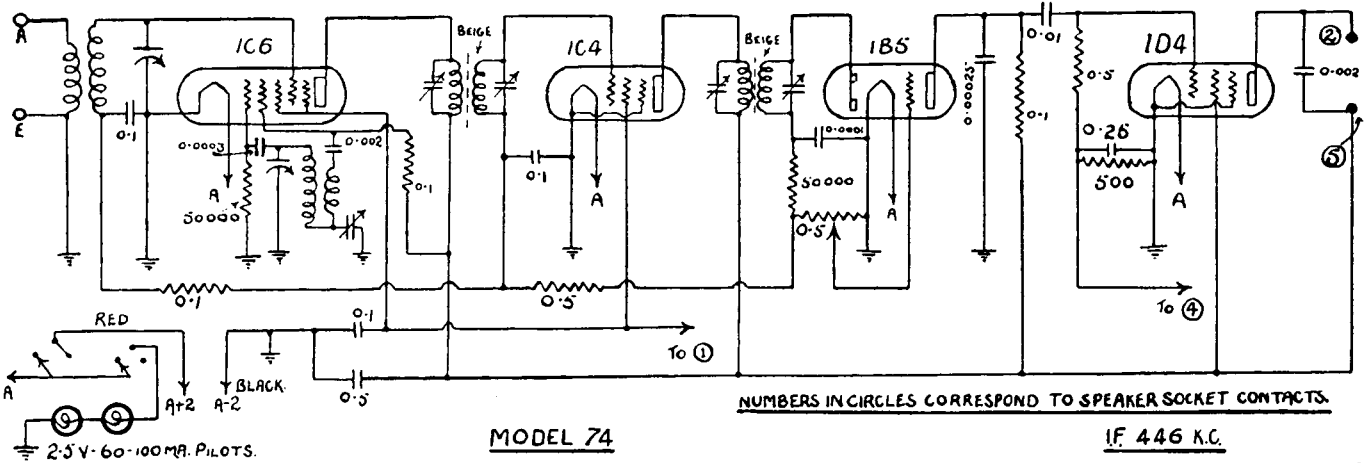

MODEL 74

Breville model 74 is a four-valve receiver designed for broadcast coverage and operation from battery power supplies. This receiver is of the console type and is fitted with three controls—volume, tuning, and battery switch (with extra position for dial-lamp control). The loudspeaker is an 8-inch permanent magnet unit, and power supply is obtained from a 2 v. accumulator ("A") and three series-connected 45 v. dry batteries ("B"). Only one valve in the receiver is biased under "no signal" conditions and this one (the power output valve) receives its bias from the drop across a 500 ohms resistor wired in series with the "B" negative lead. Connection to the "B" supply is effected through the speaker plug, in accordance with the group diagram on page 256.

The circuit arrangement of this receiver is fairly straightforward and requires little description. Particular attention should be paid to the shunt-fed oscillator circuit, and it should be remembered that the negative side of the "B" battery must **not** be connected to earth or the negative "A" lead. If it is, no bias will be applied to the output pentode, as this receives its grid voltage from the drop across a resistor wired in series between earth and "B" negative.

I.F. 446 K.C.

The voltage distribution system in this receiver is quite simple and does not necessitate complete tabulation of the operating potentials. The converter and I.F. valve screens are fed direct from a 45 v. tapping on the "B" battery, but the actual reading obtained between the screens and earth will only be 40 volts, due to the drop across the bias resistor. The oscillator anode grid is fed from "B" max. through a 100,000 ohms resistor and receives an applied potential of about 45 volts. The drop across the output valve bias resistor should be approx. 5 volts.