MODEL TR 7180

PORTABLE RECEIVER

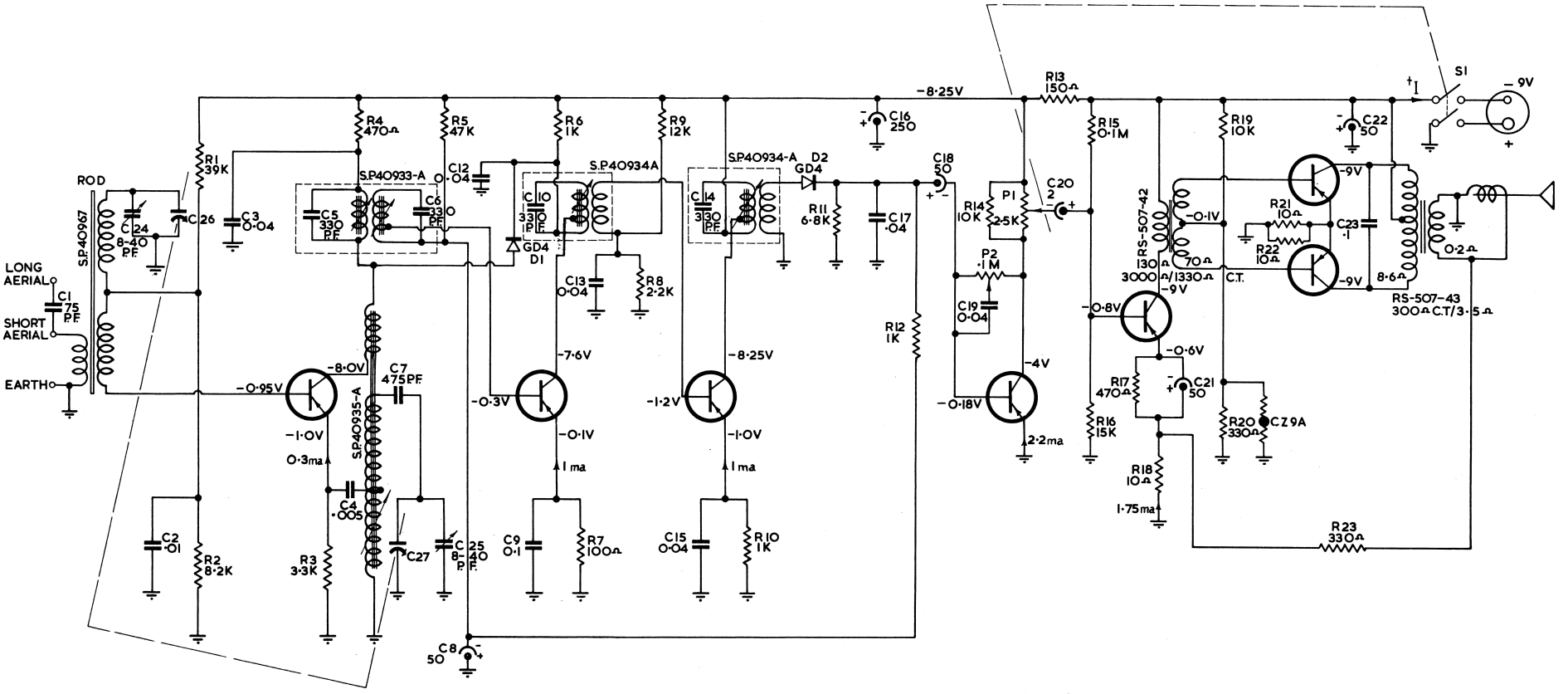

X1	X2	X3	X4	X5	X6-2N270
2N252	2N308	2N308	TS 13	TS 14	X7-2N270

MANUFACTURER RESERVES THE RIGHT TO CHANGE COMPONENTS & CIRCUIT ARRANGEMENTS WITHOUT NOTICE.

NOTE:—1. C26, C27 10—375 P.F. GANGED.
2. INTERMEDIATE FREQUENCY 455 K/C.
3. CURRENT †I IS AS FOLLOWS:
8-10ma NO SIGNAL
30-50ma NORMAL OPERATION
60-70ma FULL OUTPUT SINE WAVE INPUT
4. CAPACITANCE IN M.F. UNLESS OTHERWISE STATED.
5. ALL VOLTAGES WERE MEASURED WITH A 20,000 OHM PER VOLT METER.
6. THE TOLERANCE ON THE STATED VOLTAGES IS ±20%.
7. DIAL SCALE S.P.40958.