SANYO

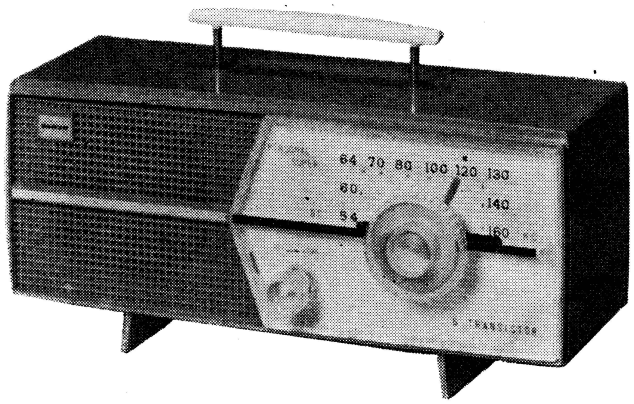

6 - transistor Portable Radio

MODEL **6C-36**

SERVICE MANUAL

SANYO ELECTRIC CO., LTD.

INTERNATIONAL DIVISION: SANYO ELECTRIC TRADING CO., LTD.
OSAKA, JAPAN

SPECIFICATIONS

FREQUENCY RANGE	BC	530—1605 kc
INTERMEDIATE FREQUENCY		455 kc
TRANSISTORS	(1) 2SA203 or 2SA182	Frequency converter
	(2) 2SA202 or 2SA180	1st IF amplifier
	(3) 2SA197 or 2SA198	2nd IF amplifier
	(4) 2SB185	AF amplifier
	(5) 2SB22 × 2	Power amplifier
DIODE & THERMISTOR		
	(1) 1S188	Detector & AGC (Di)
	(2) SDT-09	Temperature compensator (Th)

OUTPUT POWER	Undistorted	400 mW
	Maximum	600 mW
SENSITIVITY	BC 200μV/m for 10 mW output	
CURRENT DRAIN	No signal	18 mA
	Maximum	200 mA
POWER SOURCE	Four "D" size flashlight batteries	
LOUDSPEAKER	4" permanent dynamic speaker Voice coil impedance 4 ohms.	
DIMENSIONS	12" wide × 5½" high × 4¼" deep (30 × 14 × 11 cm)	
WEIGHT	1 lbs. (0.45 kg) Excl. batteries	

ALIGNMENT PROCEDURES

(1) Alignment of Semi-fixed Resistor

Apply 6 volt to the receiver as power source and make a receiver tune in no signal (Station).

Connect an ammeter (range : 1 mA) between two points A and B as illustrated.

Adjust the volume of Semi-fixed Volume in order to obtain 350 μA deflection.

Short-circuit the two points by soldering after adjustment.

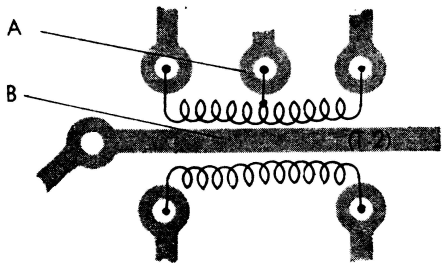

(2) IF and Broadcast RF Alignment

Apply volt-meter across the voice coil.

Volume control should be at maximum position. Output of signal generator should be no higher than necessary to obtain output reading in order to avoid AGC function.

STEP	SIGNAL GENERATOR COUPLING	SIGNAL GENERATOR FREQUENCY	RADIO DIAL SETTING	ADJUST FOR MAXIMUM OUTPUT
IF ALIGNMENT				
1	Radiate signal through the loop antenna which connected with signal generator output cable.	455 Kc	lower end	IF Transformer T3 T2 T1
BROADCAST RF ALIGNMENT				
2	Radiate signal through the loop antenna which connected with signal generator output cable.	520 Kc	lower end	L2
3		1650 Kc	upper end	Cv-2 Trimmer
4		Repeat steps 2 and 3.		
5		600 Kc	lower end	L1
6		1400 Kc	upper end	Cv-1 Trimmer
7		Repeat steps 5 and 6.		

PARTS LIST

SYMBOL NO.	STOCK NO.	DESCRIPTION

TRANSISTORS

Tr-1	2SA203 or 2SA182	Transistor
Tr-2	2SA202 or 2SA180	〃
Tr-3	2SA198 or 2SA197	〃
Tr-4	2SB185	〃
Tr-5,6	2SB22	

DIODE & THERMISTOR

DI	1S188	Detector & AGC
TH	SDT-09	Temperature compensator

TRANSFORMERS

T 1	R-W5T059	1st IF transformer
T 2	R-W5T009	2nd IF transformer
T 3	R-W5T062	3rd IF transformer
T 4	R-W6181	Input transformer
T 5	R-W6529	Output transformer

COILS

L 1	R-S85023	Antenna coil complete
L 2	R-W8086	Oscillator coil

CONTROLS

VR	R-R124502	Variable resistor
VC	R-C1506	Variable capacitor
	R-R11011	Semi-fixed resistor
	R-CXC-002	CR package
	R-CXC-025	〃

LOUDSPEAKER

SP	R-S6208	Speaker Impedance 4 ohms

ELECTROLYTIC CAPACITORS

C 4	R-C9082	100 μF 6 V
C 9	R-C9079	10 μF 3 V
C10	R-C9080	30 μF 3 V
C12,15	R-C9077	200 μF 6 V

MISCELLANEOUS-1

	R-315058	Cabinet
	R-315040	Dial scale
	R-26458	Fixing metal
	R-26473	Badge
	R-325014	Pointer
	R-S8349a	Tuning knob complete
	R-S8350	Volume knob complete
	R-13013L	Spring

SYMBOL NO.	STOCK NO.	DESCRIPTION

MISCELLANEOUS-2

	R-425261	Back cover
	R-111258	Nut
	R-33337	Handle
	R-23610	Pipe
	R-355028	Battery cover
	R-S2115	Earphone socket

SYMBOL NO.	DESCRIPTION				Q'ty

FIXED CAPACITORS

C1	Myler	0.0015 μF	+30,−20%	50wv	1…Trl
〃	〃	0.002 μF	〃	〃	1…Trl
C2	Styrol	330 pF	±10%	125wv	1
C3	Ceramic	10 pF	〃	25wv	1
C5 C7	〃	0.04 μF	+80−20%	〃	2
C6	〃	13 pF	±10%	〃	1
C8	〃	12 pF	〃	〃	1
C11	Myler	0.003 μF	+30−20%	50wv	1
C13 C14	〃	0.005 μF	〃	〃	2
C16	〃	0.01 μF	〃	〃	1
C17	Ceramic	0.04 μF	+80−20%	25wv	1
C25	〃	3 pF	±0.5 pF	〃	1
C26	〃	5 pF	±1 pF	〃	1

FIXED RESISTORS

R1	Solid or Carbon	12 K	±10%	¼w or ½w	1
R2	〃	5.6 K	〃	〃	1
R3	〃	1.8 K	〃	〃	1
R5	〃	33 K	〃	〃	1
R6	〃	6.8 K	〃	〃	1
R7	〃	560	〃	〃	1
R8	〃	100	±20%	〃	1
R9	〃	1.5 K	±5%	〃	1
R10	〃	82	±10%	〃	1
R11	〃	2.2	±5%	〃	1
R13	〃	4.7 K	±10%	〃	1
R14	〃	680	〃	〃	1
R19	〃	82	〃	〃	1
R20	〃	150 K	〃	〃	1

Printed in Japan.

MAIN PARTS TERMINAL IDENTIFICATION

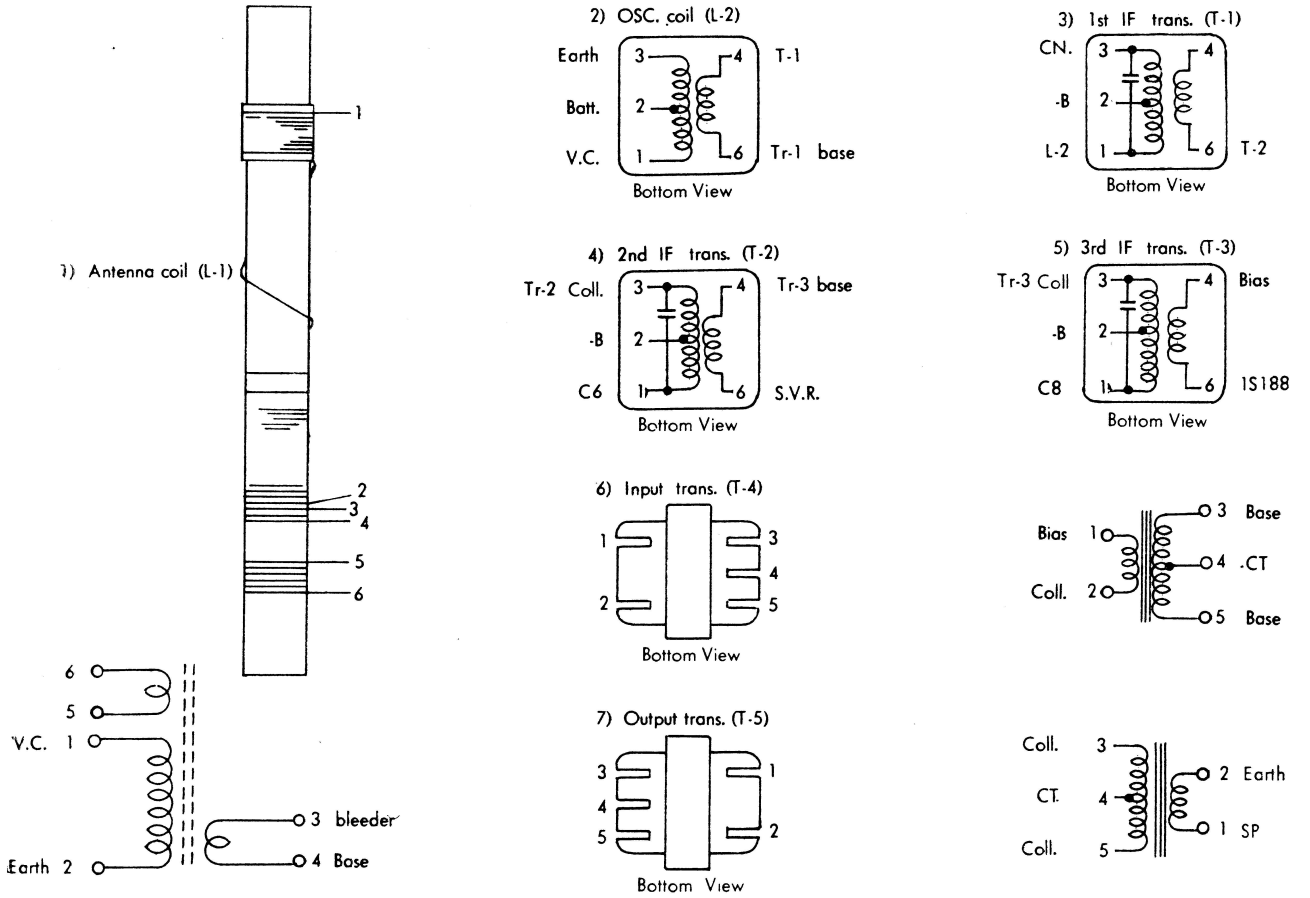

CIRCUIT DIAGRAM

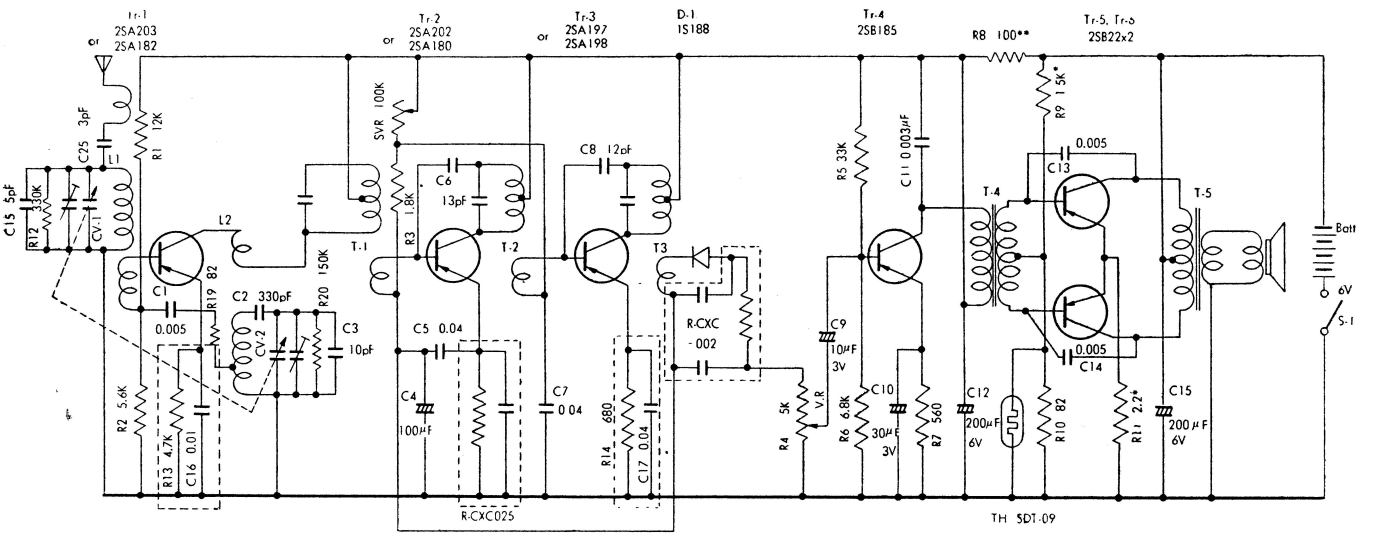

INTER PARTS CONNECITON

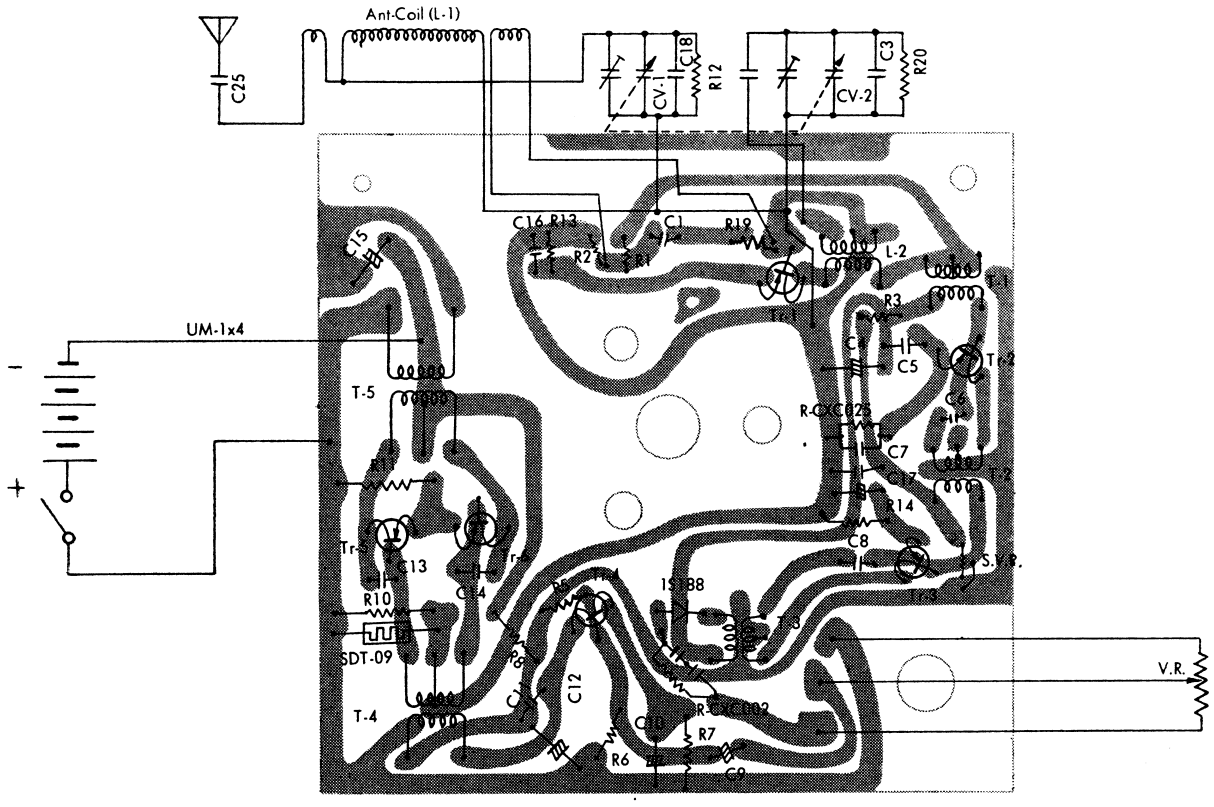
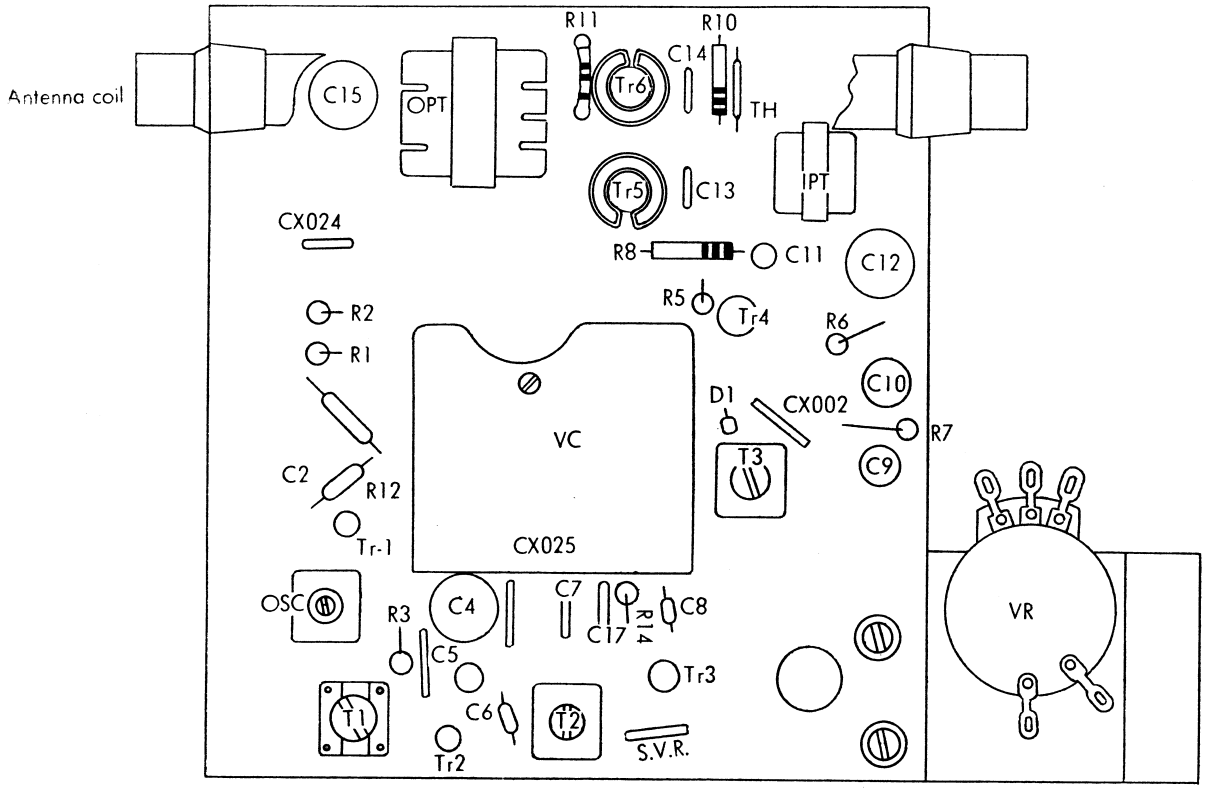
MAIN PARTS LOCATION