SANYO

6-TRANSISTOR PORTABLE RADIO

MODEL 6C-351

SERVICE MANUAL

SANYO ELECTRIC CO., LTD.

INTERNATIONAL DIVISION: SANYO ELECTRIC TRADING CO., LTD.
OSAKA, JAPAN

SPECIFICATIONS

Frequency Range ····· 530-1,605 Kc
Intermediate Frequency ····· 455 Kc
Transistors 2SA321 ····· Frequency converter
2SA202 ····· 1st IF amplifier
2SA203 ····· 2nd IF amplifier
2SB186 ····· Audio amplifier
2SB22×2 ····· Power amplifier
Diode 1S188 ····· Detector & A.G.C.
Sensitivity ····· (for 10mW output) 350 uV/m
Distortion ····· (at 50mW output with 5mV/m input) 5%

Output Power ····· Maximum 200 mW
Undistorted 130 mW
Loundspeaker ····· 2″ permanent dynamic speaker
Voice coil impedance 8 ohms
Battery ····· Two 1½ volt pen-lite batteries
Current Drain ····· No signal 25 mA
Maximum 190 mA
Outlet ····· Jack for low impedance earphone
Dimensions ····· 4½″ wide×2½″ high×1¼″ deep
Weight ····· ½ pound

ALIGNMENT PROCEDURES

Apply a volt-meter across the voice coil.
Volume control should be set at its maximum response.
Output of signal generator should not be higher than necessary to obtain proper meter reading in order to avoid AGC function.

STEP	SIGNAL GENERATOR COUPLING	SIGNAL GENERATOR FREQUENCY	RADIO DIAL SETTING	ADJUST FOR MAXIMUM OUTPUT
IF ALIGNMENT				
1	Radiate signal thru loop antenna which connected with signal generator output cable	455 Kc	Lower end	IF transformers T3 T2 T1
RF ALIGNMENT				
2	Radiate signal thru loop antenna which connected with signal generator output cable.	530 Kc	Lower end	Oscillator coil L2
3		1650 Kc	Upper end	Osc. trimmer Ct2
4		Repeat steps 2 and 3.		
5		600 Kc	600 Kc	Antenna coil L1
6		1400 Kc	1400 Kc	Antenna trimmer Ct1
7		Repeat steps 5 and 6.		

PARTS LIST

PARTS NO.	DESCRIPTION	Q'TY
TRANSISTORS & DIODE		
2SA321	Transistors Brown color	1
2SA202AA	〃	1
2SA203AA	〃	1
2SB186A	〃	1
2SB22A	〃 Red or no color	2
COILS & TRANSFORMERS		
R-W2612	Antenna Coil L1	1
R-W8535a	Oscillator Coil L2	1
R-W5T531	IF Transformer T1	1
R-W5T532	〃 T2	1
R-W5T533	〃 T3	1
R-W6152a	Input Transformer T4	1
R-W6609	Output Transformer T5	1
CONTROLS		
R-C1088	Variable Capacitor	1
R-R110506	Variable Resistor	1
ELECTROLYTIC CAPACITORS		
R-C9526	30μF 3V C4, C12	2
R-C9547	100μF 3V C10	1
R-C9527	5μF 6V C11	1
MISCELLANEOUS		
R-S6644	Speaker 2″ 8 ohms	1
R-S6560	Earphone	1
R-S2107	Jack-earphone	1
R-23439	Lug Terminal	1
CHASSIS		
R-415335a	Printed Circuit Board	1
R-255113	Battery Terminal - negative	2
R-255114	Battery Terminal - positive	2
R-325262	Plastic Mount - variable cap.	1
R-395180	Tuning Knob	1
R-245192a	Metal Mount - volume knob	1
R-315193	Cabinet - front body	1
R-265631	Metal Bracelet - on cabinet	1
R-265633	Trim Ring - volume knob opening	1
R-265796	Ornament Plate - MODEL 6C-351	1
R-325357	Plastic Mount - p.c. board mtg	1
R-375021	Ribbon - battery pull - out	1
R-395178	Front Plastic - chrome plated	1
R-315194	Back Cover - rear body	1
R-435074	Cloth Net - on back cover	1
R-325258	Battery Compartment Lid	1
R-265797	Specification Sheet	1
R-325260	Front Panel - on front plastic	1
R-325259	Transparent Cover - 〃	1
R-265634	Dial - 〃	1
R-25068	Fixing Metal - speaker	1

PARTS NO.	DESCRIPTION	Q'TY
CABINET		
R-425975	Cushion - speaker	1
R-395179a	Volume Knob	1
R-265696	Decoration Disc - volume knob	1
R-355154	Polyethylene Ring - 〃	1
R-475645a	Battery Instruction Sheet	1

REC. NO.	DESCRIPTION	Q'TY
FIXED VALUE CAPACITORS		
C1	0.0033μF ±20% 25V Mylar	1
C2, C13, C14	0.01μF 〃 〃 〃	3
C15	0.02μF 〃 〃 〃	1
C17	0.001μF 〃 〃 〃	1
C5	16pF or 18pF ±10% 25V Ceramic	1
C7	15pF or 16pF 〃 〃 〃	1
C3	140pF ±5% 25V Styrol or mica	1
C6, C8	0.02μF +80% 25V Ceramic	2
FIXED VALUE RESTSTORS		
R1	6.8 K ohms ±10% ¼W	1
R2, R9	5.6 K 〃 〃 〃	2
R3	3.9 K 〃 〃 〃	1
R4	15 〃 〃 〃	1
R5	33 〃 〃 〃	1
R6 R11	47 K 〃 〃 〃	2
R7	390 〃 〃 〃	1
R8, R10	220 〃 〃 〃	2
R12	4.7 K 〃 〃 〃	1
R13	56 〃 ±20% 〃	1
R14, R16	47 〃 ±10% 〃	2
R15	680 〃 〃 〃	1
R17	1 〃 〃 〃	1

Printed in Japan

CIRCUIT DIAGRAM

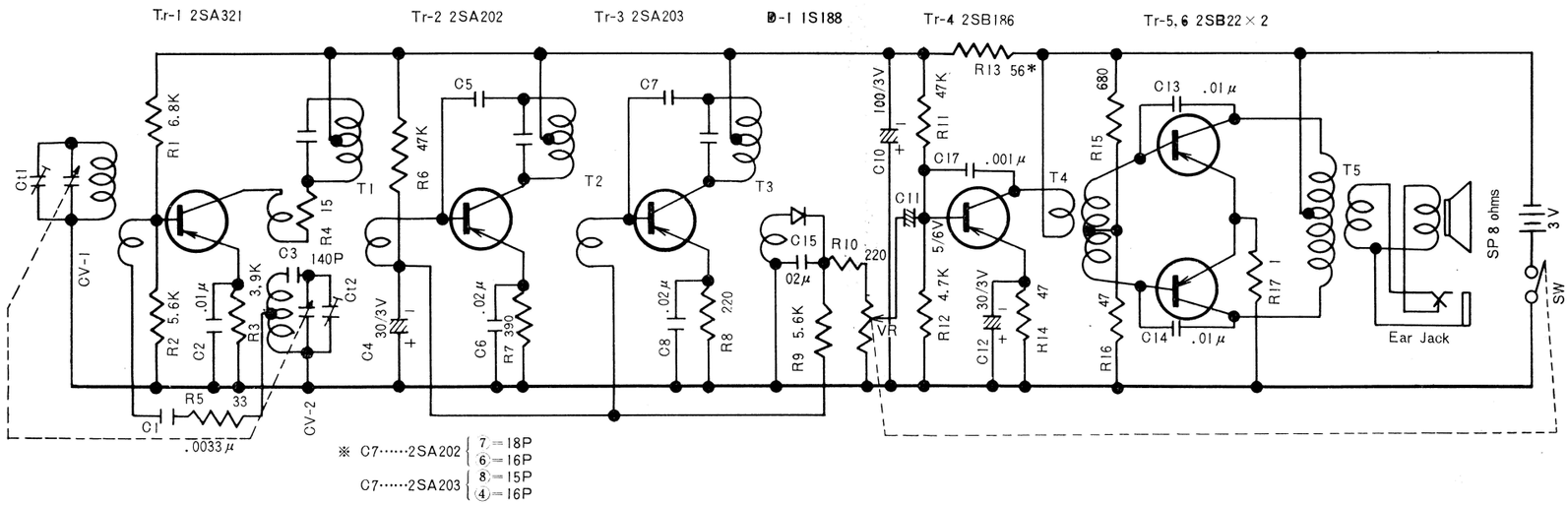

ELECTRIC PARTS IDENTIFICATION

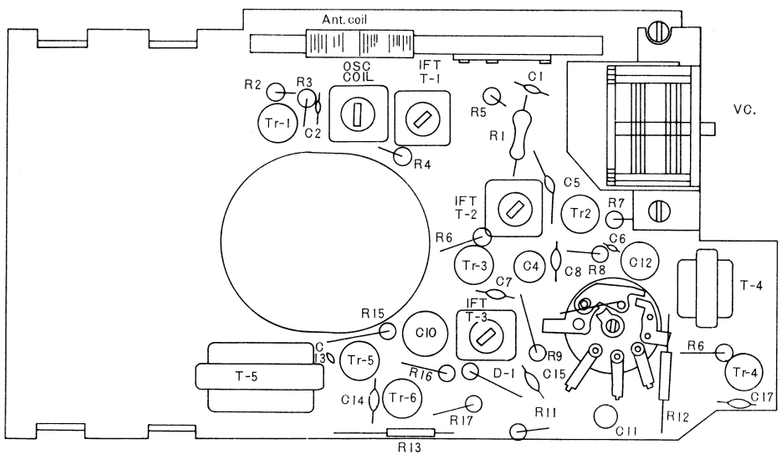

MEASURED VOLTAGES & CURRENTS (in volts)

	Tr1	Tr2	Tr3	Tr4	Tr5	Tr6
Collector	2.6	2.65	2.65	2.3	2.95	2.95
Base	1.25	0.23	0.23	0.20	0.15	0.15
Emitterr	1.15	0.14	0.13	0.75	—	—
Collector Currents	280μA	330μA	560μA	1.5mA	4.5mA	
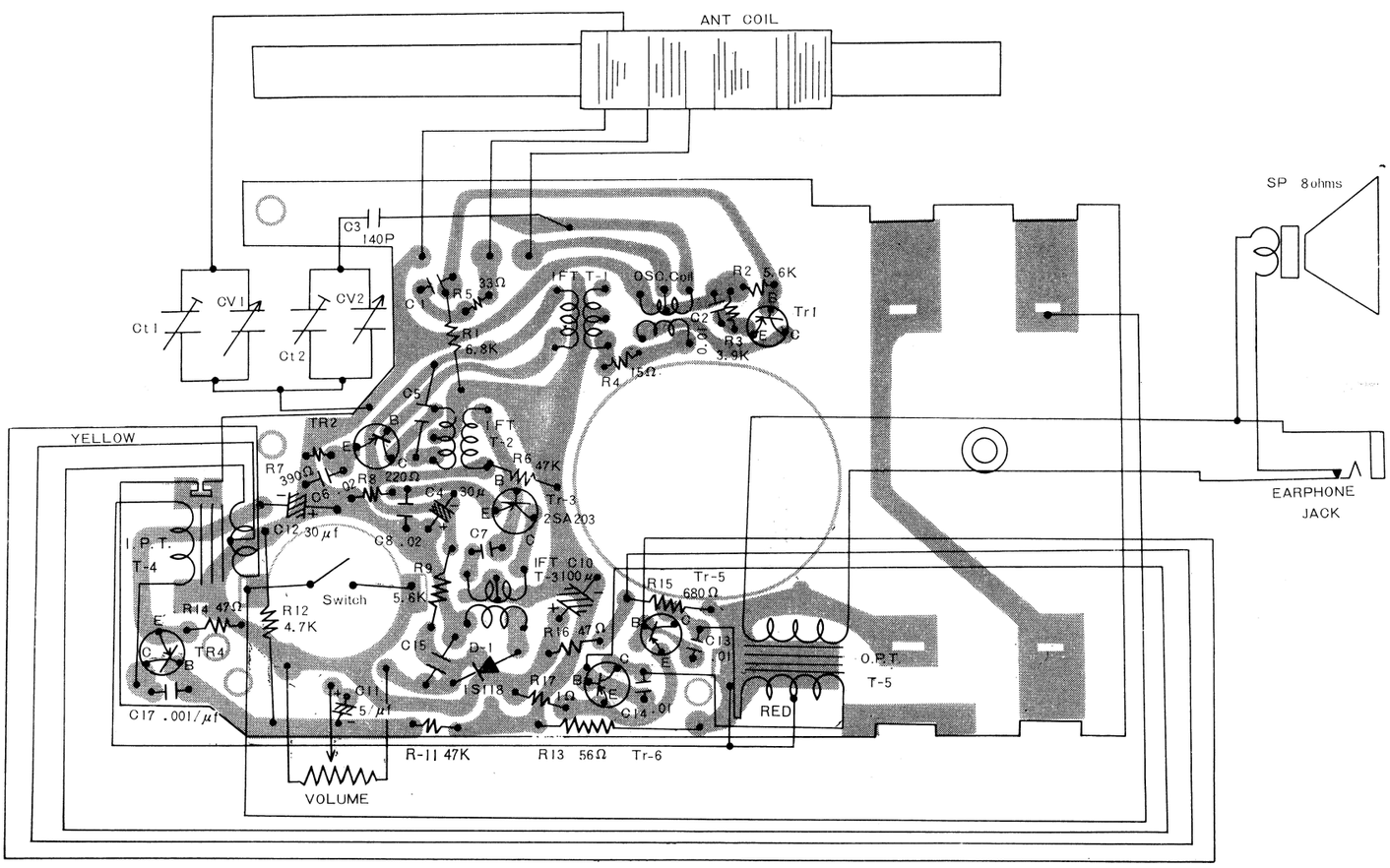
INTER-PARTS WIRING ILLUSTRATION