SANYO

ISO

All fasteners subject to metric dimension of International Organization for Standadization.

6-Transistor Table Radio
Plastic Cabinet

MODEL 6C-120D

SERVICE MANUAL

SANYO ELECTRIC CO., LTD.

INTERNATIONAL DIVISION: SANYO ELECTRIC TRADING CO., LTD.
OSAKA, JAPAN

SPECIFICATION

FREQUENCY RANGE ·····535-1605 KHz
INTERMEDIATE FREQUENCY ·····455 KHz
TRANSISTORS ·····2SA101 Frequency converter
2SA202 IF Amplifier
2SA203 IF Amplifier
2SB186 Audio Amplifier
2SB22×2 Power Amplifier
DIODE····· 1S188 or SD46 Detector & AGC
THERMISTOR····· SDT-09 Temperature compensator

OUTPUT POWER·····Undistorted 500 mW
Maximum 800 mW
CURRENT DRAIN ·····No signal 12 mA
Maximum 230 mA
SPEAKER·····4″ permanent dynamic
4 ohm voice coil impedance
POWER SUPPLY ·····DC 6V:4×D-size battery
DIMENSIONS ·····10½″ wide×8¼″ high×3½″ deep
WEIGHT ·····3 lbs.

ALIGNMENT PROCEDURES

IF & RF alignment

Apply volt-meter across voice coil.
Volume control should be at maximum position.
Output of signal generator should be no higher than necessary to obtain proper output reading in order to avoid AGC function.

STEP	SIGNAL GENERATOR COUPLING	SIGNAL GENERATOR FREQUENCY	RADIO DIAL SETTING	ADJUST FOR MAXIMUM OUTPUT
IF alignment				
1	Radiate signal through the loop antenna, which connected with signal generator output cable.	455 KHz	Lower end	T-1 T-2 T-3
RF alignment				
2	Radiate signal through the loop antenna, which connected with signal generator output cable.	540 KHz	Lower end	L-2
3		1605 KHz	Upper end	MW osc. trim. Ct-2
4		Repeat Steps 2 and 3		
5		600 KHz	600 KHz	L-1
6		1400 KHz	1400 KHz	MW ant. trim. Ct-1
7		Repeat steps 5 and 6		

PARTS LIST

PART NO.	DESCRIPTION	Q'TY
HOUSING		
R-A6120D	Housing Assembly	1
-R-311147	Housing	1
-R-38215	Dial Scale	1
-R-262184	Badge	1
-R-	Back Screen 115×25×1t paper with adhesive	1
-R-311161	Plastic Grille speaker grille	1
-R-	Double-face Adhesive 3M #467 6×190	2
R-275051a	Handle	1
R-311230	Back Cover plastic	1
R-23927	Pointor	1
R-311258	Plastic Base battery support	1
R-35171	Battery Holder Tube	1
R-S81827	Volume Knob	1
R-S81812	Tuning Knob	1
CHASSIS		
R-S85289	Tuning shaft	1
R-S7089	Special nut-Tuning shaft mtg	1
R-39447	Drum	1
R-S7083	Special screw-Drum mtg	1
R-155026	Tension spring	1
R-327077	Pulley	3
R-241416	Pulley shaft ISO	3
R-	Dial cord 0.5ϕ tetron 1000mm	1

SCHEMATIC LOCATION	PART NO.	DESCRIPTION
SEMICONDUCTORS		
Tr1	2SA101	Transistor
Tr2	2SA202AA	Transistor
Tr3	2SA203B3	Transistor
Tr4	2SB186B	Transistor
Tr5 Tr6	2SB22	Transistor (orange or blue marking)
D1	1S188 or SD-46	Diode
	SDT-09	Thermistor
COILS & TRANSFORMERS		
L1	R-S85225a	Antenna coil
L2	R-W8295-3	Oscillator coil
T1	R-W5T008	IF Transformer
T2	R-W5T009	IF Transformer
T3	R-W5T043	IF Transformer
T4	R-W6181	Input Transformer
T5	R-W6560	Output Transformer
CONTROLS		
VR	R-R116558	Variable resistor-volume control
Cv1 Cv2	R-C1031	Variable capacitor-tuning cotrol
MISCELLANEOUS		
	R-S6543	Speaker 4 inches 4 ohms
	R-115332a	Battery terminal-positive
	R-255059a	Taper spring-negative

SCHEMATIC LOCATION	PART NO.	DESCRIPTION	
ELECTROLYTIC CAPACITORS			
C4	R-C9137	30μF	6V
	R-C9105		
C12	R-C9131	5μF	6V
	R-C9078		
C13	R-C9105	30μF	6V
	R-C9137		
C14	R-C9143	200μF	6V
FIXED VALUE CAPACITORS			
C1	R-CKD150K	Ceramic 15pF	±10%
C2	R-CQS152M	Mylar 0.0015μF	±20%
C3	R-CQS472M	Mylar 0.0047μF	±20%
C5 C9	R-CKD203Z	Ceramic 0.02μF	+80%
C6	R-CKD150K	Ceramic 15pF	±10%
C7	R-CQS682K	Mylar 0.0068μF	±20%
C8	R-CKD100K	Ceramic 10pF	±10%
C10 C11	R-CKD103Z	Ceramic 0.01μF	+80%
C15 C16	R-CQS153M	Mylar 0.015μF	±20%
FIXED VALUE RESISTORS			
All resistors herein are of $\frac{1}{4}$ watt type with 10% allowance.			
R1 R10	R-R562K	5.6K ohms	
R2 R9 R14	R-R473K	47K ohms	
R3	R-R152K	1.5K ohms	
R4	R-R330K	33 ohms	
R5	R-R101K	100 ohms	
R7	R-R122K	1.2K ohms	
R11 R15	R-R471K	470 ohms	
R12	R-R821K	820 ohms	
R13	R-R103K	10K ohms	
R16	R-R391K	390 ohms	
R17	R-R151K	150 ohms	
R18	R-R222K	2.2K ohms	
R19	R-R010K	1 ohm	
R20	R-R184K	180K ohms	
R21	R-R272K	2.7K ohms	

WM-48 1969 June Printed in Japan

SCHEMATIC DIAGRAM

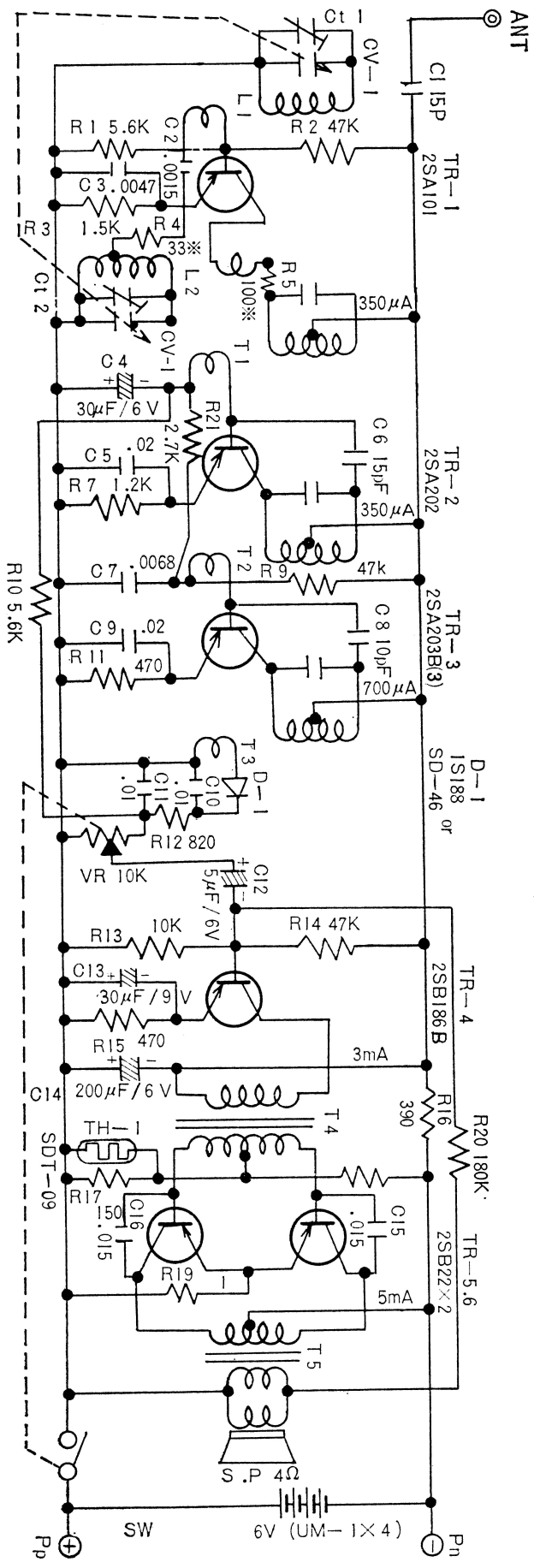

VALUES OF VOLTAGES DEVELOPED ON TRANSISTORS

(Measured from common positive line to the respective terminals of transistors)

TRANSISTOR / TERMINALS	TR-1	TR-2	TR-3	TR-4	TR-5 & TR-6
BASE	−0.42V	−0.45V	−0.42V	−0.7V	−0.2V
EMITTER	−0.42V	−0.45V	−3.2V	−0.67V	0 V
COLLECTOR	−4.5V	−4.9V	−4.9V	−4.4V	−6.0V
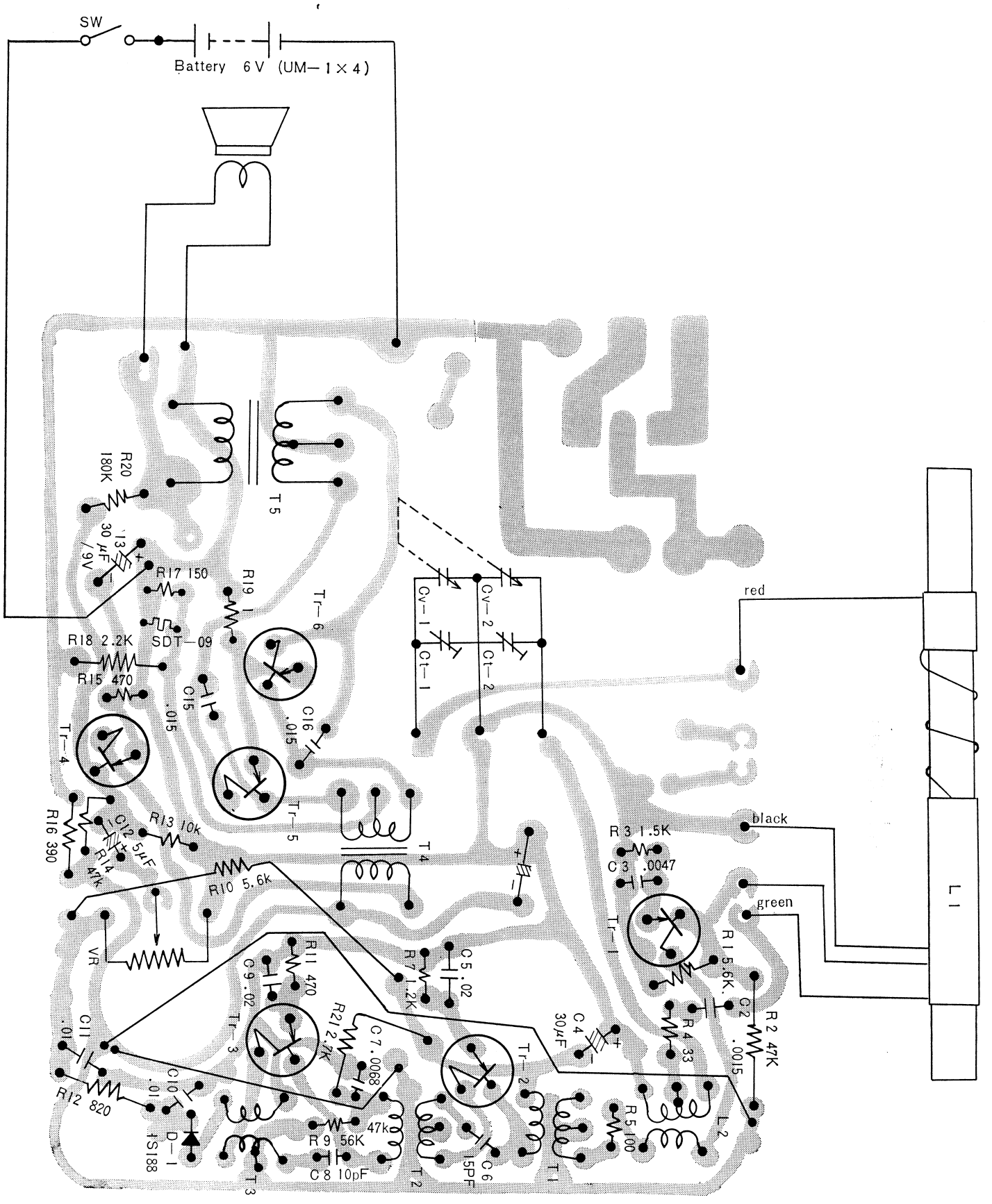
INTER-PARTS WIRING