SANYO

6-Transistor, Table Radio

MODEL 6C-117

SERVICE MANUAL

SANYO ELECTRIC CO., LTD.

INTERNATIONAL DIVISION : SANYO ELECTRIC TRADING CO., LTD.
OSAKA, JAPAN

SPECIFICATION

FREQUENCY RANGE		535-1,605 Kc
INTERMEDIATE FREQUENCY		455 Kc
TRANSISTORS	2SA321	Frequency converter
	2SA202×2	IF amplifier
	2SB186	AF amplifier
	2SB22	Power amplifier
DIODE	1S188 or 1S426	Detector & AGC.
THERMISTOR	SDT-09	Temperature compensator

SENSITIVITY	10 mW output	40 μV/m
OUTPUT POWER	Undistorted	500 mW
	Maximum	800 mW
CURRENT DRAIN	No signal	12 mA
	Maximum	230 mA
LOUDSPEAKER	4″ permanent dynamic speaker	
BATTERY	6V : 4×D-size battery (UM-1×4)	
DIMENSIONS	10⅜″ wide×5⅞″ high×¾″ thick	
WEIGHT	3.1 lbs.	

ALIGNMENT PROCEDURES

IF & RF alignment

Apply volt-meter across voice coil.
Volume control should be at maximum position.
Output of signal generator should be no higher than necessary to obtain proper output reading in order to avoid AGC function.

STEP	SIGNAL GENERATOR COUPLING	SIGNAL GENERATOR FREQUENCY	RADIO DIAL SETTING	ADJUST FOR MAXIMUM OUTPUT
IF alignment				
1	Radiate signal through the loop antenna, which connected with signal generator output cable.	455 Kc	Lower end	T-1 T-2 T-3
RF alignment				
2	Radiate signal through the loop antenna, which connected with signal generator output cable.	530 Kc	Lower end	L-2
3		1605 Kc	Upper end	BC osc. trim. Ct-2
4		Repeat Steps 2 and 3		
5		600 Kc	600 Kc	L-1
6		1400 Kc	1400 Kc	BC ant. trim. Ct-1
7		Repeat steps 5 end 6		

PARTS LIST

Symbol No.	Stock No.	Description	Q'ty
Cabinet			
	R-315178	Cabinet	1
	R-325202	Dial	1
	R-265390	Badge	1
	R-325203	Handle	1
	R-325204	Handle cover	1
	R-115331	Pointer	1
	R-115332	Battery terminal (−)	1
	R-255059	〃 (+)	1
	R-325125	Tuning knob	1
	R-265394	Decoration metal of TU knob	1
	R-355133	Spacer of TU knob	1
	R-325126	Volume knob	1
	R-265072	Decoration metal of volume knob	1
	R-355134	Spacer of volume knob	1
	R-426567	Back cover	1
	R-435060	Black net on back cover	1
	R-35171	Battery holding tube	1
Chassis			
	R-415222	Printed in circuit board	1
	R-115333	Chassis	1
	R-32324	Drum	1
	R-155026	Coil spring of drum	1
	R-S85184	Tuning shaft	1
	R-325017	Pulley	3
	R-275024	Pulley shaft	3
	R-435061	Spacer of pulley	3
	R-435062	Tuning rope (0.5∅)	1
	R-265193a	Antenna holder	1
	R-44065	Cushion of VC.	1
Electric parts			
	R-S6543	Speaker	1
T-4	R-W6181	Input trans	1
T-5	R-W6560	Output trans	1
L-2	R-W8545	OSC. coil	1
	R-R116541	Variable resistor	1
Cv-1, 2	R-C1509	Variable capacitor	1
T-1	R-W5T008	IF. trans.	1
T-2	R-W5T009	〃	1
T-3	R-W5T043	〃	1
L-1	R-S85188	Antenna coil	1
C4	R-C9023	Electrolytic capacitor (30 μF/6V)	1
C12	R-C9098	〃 (5 μF/6V)	1
C13	R-C9081b	〃 (50 μF/9V)	1
C14	R-9077	〃 (200 μF/6V)	1
	R-S2115	Socket of measurement terminal	1
	R-S8300	External antenna lead	1
	R-S85020	Measurement terminal	1
Tr-1	2SA321	Transistor	1
Tr-2, 3	2RA202	〃	2
Tr-4	2SB186	〃	2
Tr-5, 6	2SB22	〃	1
D-1	1S188	Diode	1
TH-1	SDT-09	Thermister	1
Resistor & Capacitor			
R1, 10	5.6 k ohms	±10% ¼ or ½W Solid or	2
R2, 14	47 k ohms	〃 〃 Carbon	2
R3	1.5 k ohms	〃 〃 〃	1
R4	33 ohms	±20% 〃 〃	1
R5	100 ohms	〃 〃 〃	1
R6	68 k ohms	±10% 〃 〃	1
R8	4.7 k ohms	〃 〃 〃	1

Symbol No.	Description	Q'ty
R9	59 k ohms 〃 〃 〃	1
R11, 15	470 ohms 〃 〃 〃	2
R12	820 ohms 〃 〃 〃	1
R13	10 k ohms 〃 〃 〃	1
R16	390 ohms 〃 〃 〃	1
R17	150 ohms 〃 〃 〃	1
R18	2.2 k ohms 〃 〃 〃	1
R19	1 ohms 〃 〃 〃	1
R20	180 k ohms 〃 〃 〃	1
R7	1.2 k ohms 〃 〃 〃	1
R19	2.2 k ohms 〃 〃 〃	1
C2	0.0015 μF ±20% 25 or 50V Mylar	1
C3	0.0047 μF 〃 〃 〃	1
C16, 15	0.01 μF 〃 〃 〃	2
C7	0.0068 μF 〃 〃 〃	1
C5, 9	0.02 μF +80 −20% 〃 Ceramic	2
C10, 11	0.01 μF 〃 〃 〃	2
C1, 6	15 pF ±10% 25V 〃	2
C8	10 pF 〃 〃 〃	1
Screw, Washer & Nut		
Pan head tapping screw (5×8)	Speaker	4
Washer (3.2×10×1t)	Handle	2
Spring washer (5∅)	〃	2
Hexagon nut (M3)	〃	2
Eyelet (3×10)		1
Washer (3.2×10×1t)		2
Round head screw (3×8)	Chassis & P.C. board	2
Washer (3.2×10×1t)	〃	1
Spring washer (3∅)	〃	2
Round head screw (2.6×3)	VC	2
〃 (2.6×6)	Drum	1
Spring washer (2.7∅)	〃	1
〃 (3∅)	Pulley shaft	3
Hexagon nut (M8.3)	TU shaft	1
Pan head tapping screw (3×8)	P.C. board	6

6-20079 Printed in Japan

LOCATION OF MAIN PARTS

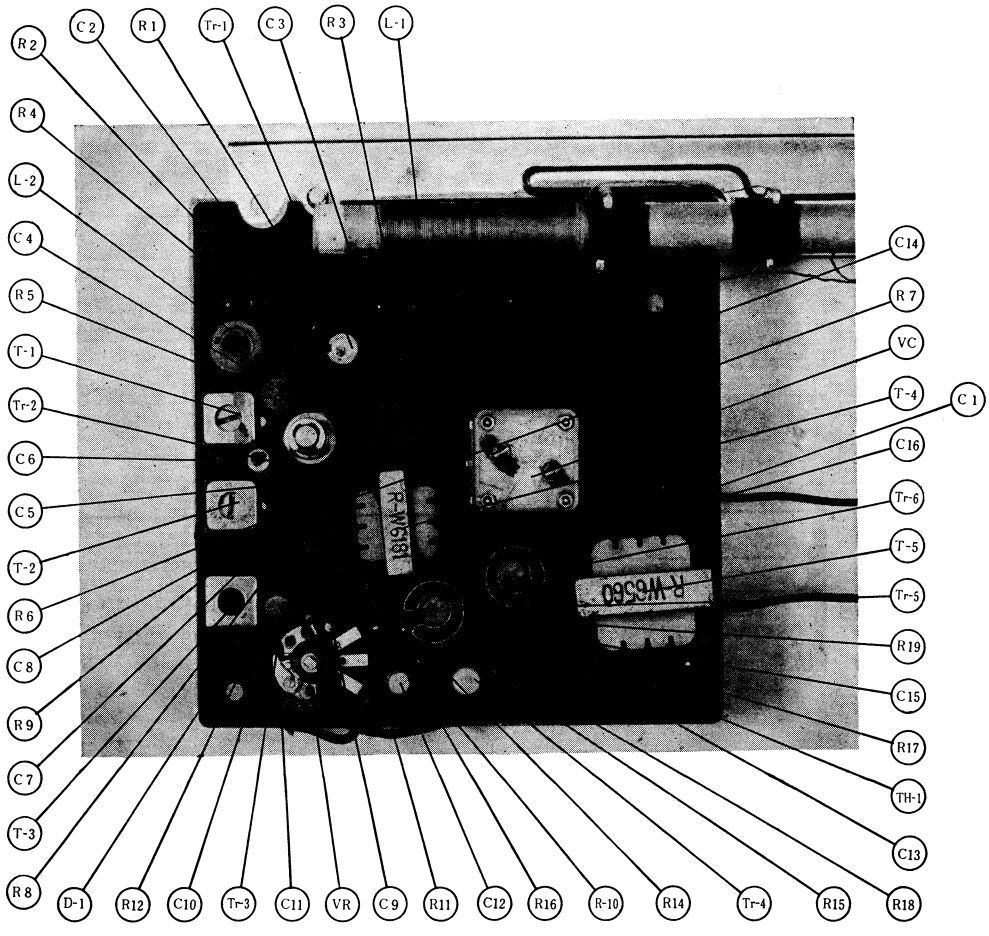

INTER-PARTS WIRING

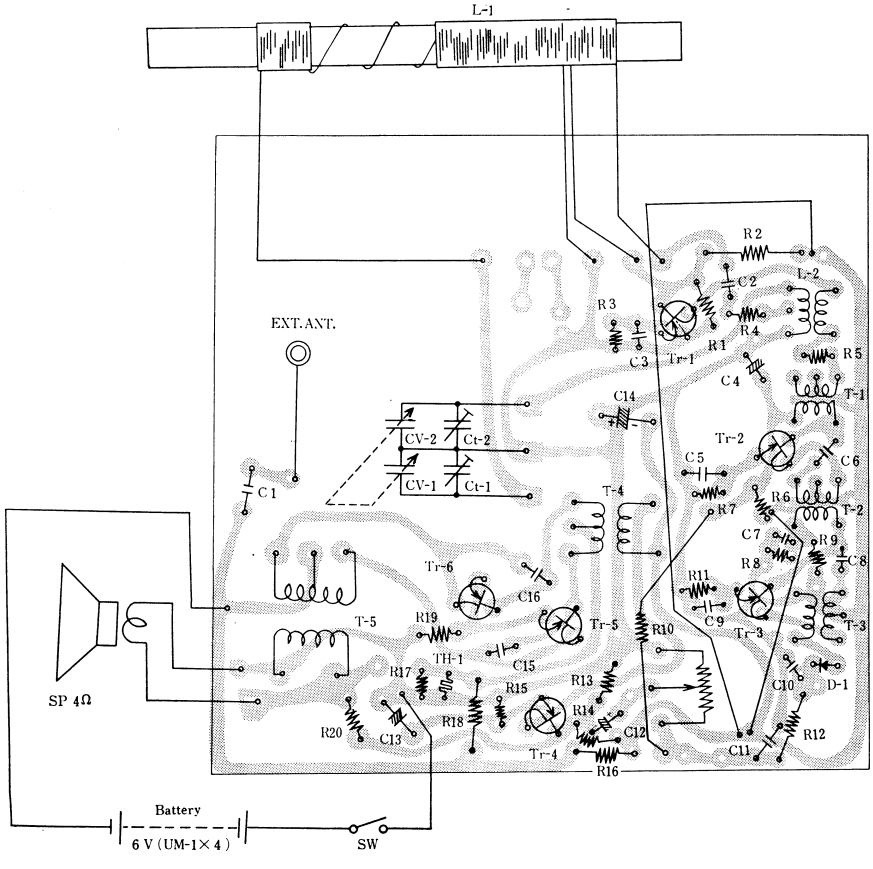
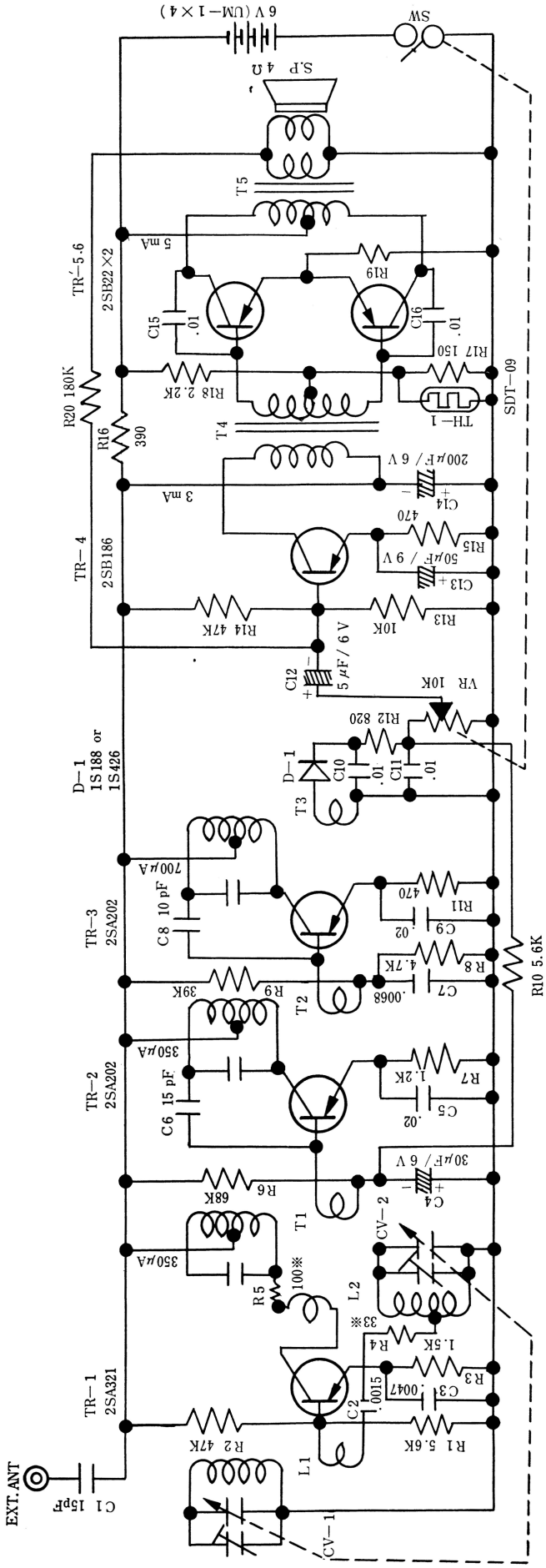
CIRCUIT DIAGRAMS