SANYO

6-transistor Table/Portable Radio

MODEL 6C-03

SERVICE MANUAL

SANYO ELECTRIC CO., LTD.
INTERNATIONAL DIVISION: SANYO ELECTRIC TRADING CO., LTD.
OSAKA, JAPAN

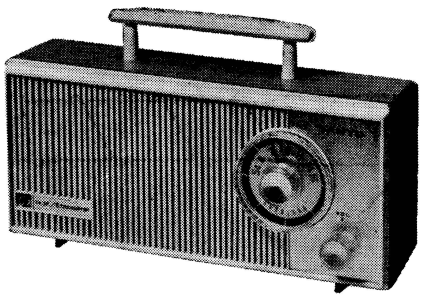

SPECIFICATIONS

FREQUENCY RANGE: 530 - 1605 Kc
INTERMEDIATE FREQUENCY: 455 Kc
TRANSISTORS:
(1) 2SA182 or 2SA203 ..... Frequency converter
(2) 2SA180 or 2SA202 ..... 1st IF amplifier
(3) 2SA197 or 2SA202 ..... 2nd IF amplifier
(4) 2SB185 ..... AF amplifier
(5) 2SB187×2 ..... Power amplifier
DIODE: 1S188 ..... Detector & AGC
THERMISTOR: SDT-20 ..... Temperature compensator
RADIATION SENSITIVITY:
10 mW output 420 μV/m

DISTORTION:
50 mW output at 5 mV/m input 7%
OUTPUT POWER: Undistorted ..... 200 mW
Maximum ..... 320 mW
SIGNAL TO NOISE RATIO:
5 mW output at 1 mV/m input ..... 25 dB
CURRENT DRAIN: No signal ..... 15 mA
Maximum ..... 125 mA
LOUDSPEAKER: 4″ permanent dynamic speaker
Voice coil impedance 4 ohms
BATTERY: Operates on 4 " D " size flashlight batteries
DIMENSIONS: 10⅜″ wide×5″ high×3″ thick
WEIGHT: 2.2 lbs.

ALIGNMENT PROCEDURES

(1) Alignment of Semi-fixed Resistor.
Apply 6 volts to the receiver as power source and make a receiver tune in no signal (station).
Connect an ammeter (range: 1 mA) between two points A and B as figre.
Adjust the value of semi-fixed Volume in order to obtain 350 μA deflection.
Short circuit the two points by soldering after adjustment.

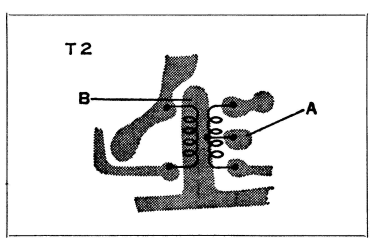

(2) IF and Broadcast RF alignment.
Apply volt-meter across the voice coil.
Volume control should be at maximum position. Output of signal generator should be no higher than necessary to obtain output reading in order to avoid AGC function.

STEP	SIGNAL GENERATOR COUPLING	SIGNAL GENERATOR FREQUENCY	RADIO DIAL SETTING	ADJUST FOR MAXIMUM OUTPUT
IF ALIGNMENT				
1	Radiate signal through the loop antenna, which connected with signal generator output cable.	455 KC	lower end	IF Transformer T-3 T-2 T-1
BROADCAST RF ALIGNMENT				
2	Radiate signal through the loop antenna, which connected with signal generator output cable.	520 KC	lower end	L-2
3		1650 KC	upper end	Ct-2 OSC trimmer
4		Repeat step 2 and 3.		
5		600 KC	600 KC	L-1
6		1400 KC	1400 KC	Ct-1 ANT trimmer
7		Repeat step 5 and 6.		

PARTS LIST

SYMBOL No.	STOCK No.	DESCRIPTION	Q'ty
CHASSIS			
	R-44045	Cushion of VC	3
	R-35147	Holder of ANT coil	1
ELECTRICAL			
L-1	R-S85051	ANT coil (Complete)	1
L-2	R-W8516	OSC coil	1
T-4	R-W6181	Input trans	1
T-5	R-W6182	Output trans	1
	R-C1036a	Variable capacitor	1
	R-R116514	Variable resistor	1
	R-R11011	Semi-fixed resistor	1
	R-S6531	Speaker or R-56543	1
	R-CXC002	Packed capacitor & resistor (200ohms + 0.01μF × 2)	1
	R-CXC024	〃 (4.7Kohms + 0.005μF)	1
C9	R-C9079	Electrolytic capacitor (3V 10μF)	1
C10	R-C9080	〃 (3V 30μF)	1
C5	R-C9082	〃 (6V 100μF)	1
C12	R-C9086a	〃 (6V 120μF)	1
	R-S2040	Earphone socket	1
	R-S2025b	External ANT jack	1
	R-CXC025	Packed capacitor & resistor (1.2Kohms + 0.04μF)	1
	R-CXC026	〃 (820ohms + 0.04μF)	1
T-1	R-W5T008	IF trans	1
T-2	R-W5T009	〃	1
T-3	R-W5T043	〃	1
Tr-1	2SA182 or 2SA203	Transistor AA	1
Tr-2	2SA180 or 2SA202	〃 〃	1
Tr-3	2SA202	〃 〃	1
	2SB185	〃 〃	1
Tr-4	2BS187	〃 〃	2
Tr-5,6	1S188	Diode	1
	SDT-20	Thermistor	1
PACKAGE			
	R-475212	Instruction sheet	1

SYMBOL No.	STOCK No.	DESCRIPTION	Q'ty
CABINET			
R-315053		Front plastic grille	1
R-315054a		Cabinet	1
R-395022		Battery compartment cover	1
R-265120		Metal plate (Sanyo)	1
R-265121		"6 TRANSISTOR" metal	1
R-265110		Dial scale disc	1
R-S3008		Lug	1
R-12080		Nut (Cabinet and panel retaining clip)	2
R-S85041a		Battery terminal (−)	1
R-115114		Battery terminal (+)	1
R-315057		Handle	1
R-315029		Hanger pole (between the handle and cabinet)	2
R-35171		Battery holding tube	1
R-S8543		VR knob	1
R-365025		Vinyl ring (tube pull out)	1
R-S85013a		Tuning knob	1
RESISTOR & CAPACITOR			
R12	2.2 K ohms	±10% ½ or ¼W	1
R9	100 ohms	±20% 〃	1
R11	220 ohms	±10% 〃	1
R8	560 ohms	〃 〃	1
R13	1.8 K ohms	〃 〃	1
R10	3.3 K ohms	〃 〃	1
R2,7	5.6 K ohms	〃 〃	2
R1	12 K ohms	〃 〃	1
R6	22 K ohms	〃 〃	1
C1	0.003 μF	$^{+30}_{-20}$% 50WV Mylar	1
C11	0.0075 μF	〃 〃 〃	1
C13,14	0.01 μF	〃 〃 〃	2
C18	5 pF	±10% 25WV Ceramic	1
C16,17	0.04 μF	$^{+100}_{-0}$% 50WV 〃	2
C19	2 pF	±10% 25WV 〃	1
C3,7	10 pF	〃 〃 〃	2
C4	13 pF	〃 〃 〃	1
C2	330 pF	〃 50WV	1

6-20034 Printed in Japan

MAIN PARTS CONNECTION

1. Antenna

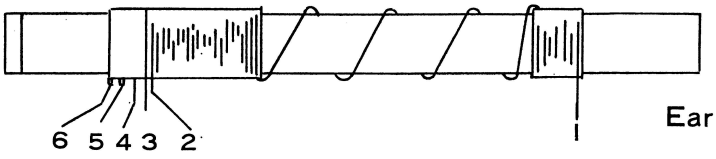

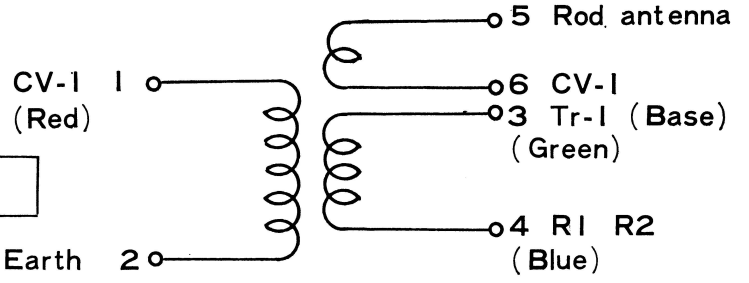

2. OSC coil

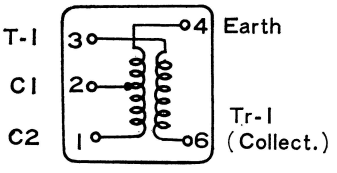

3. Input trans

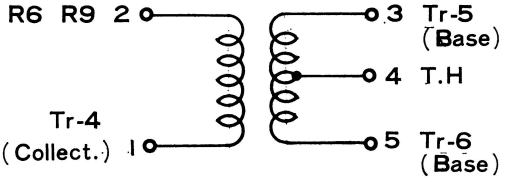

4. Output trans

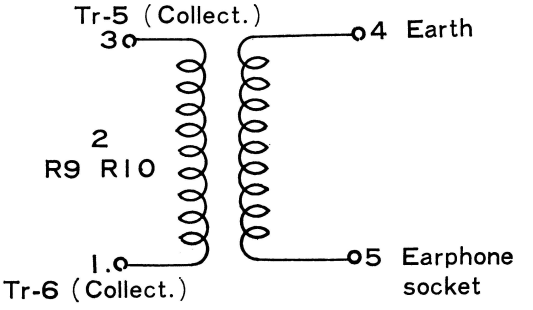

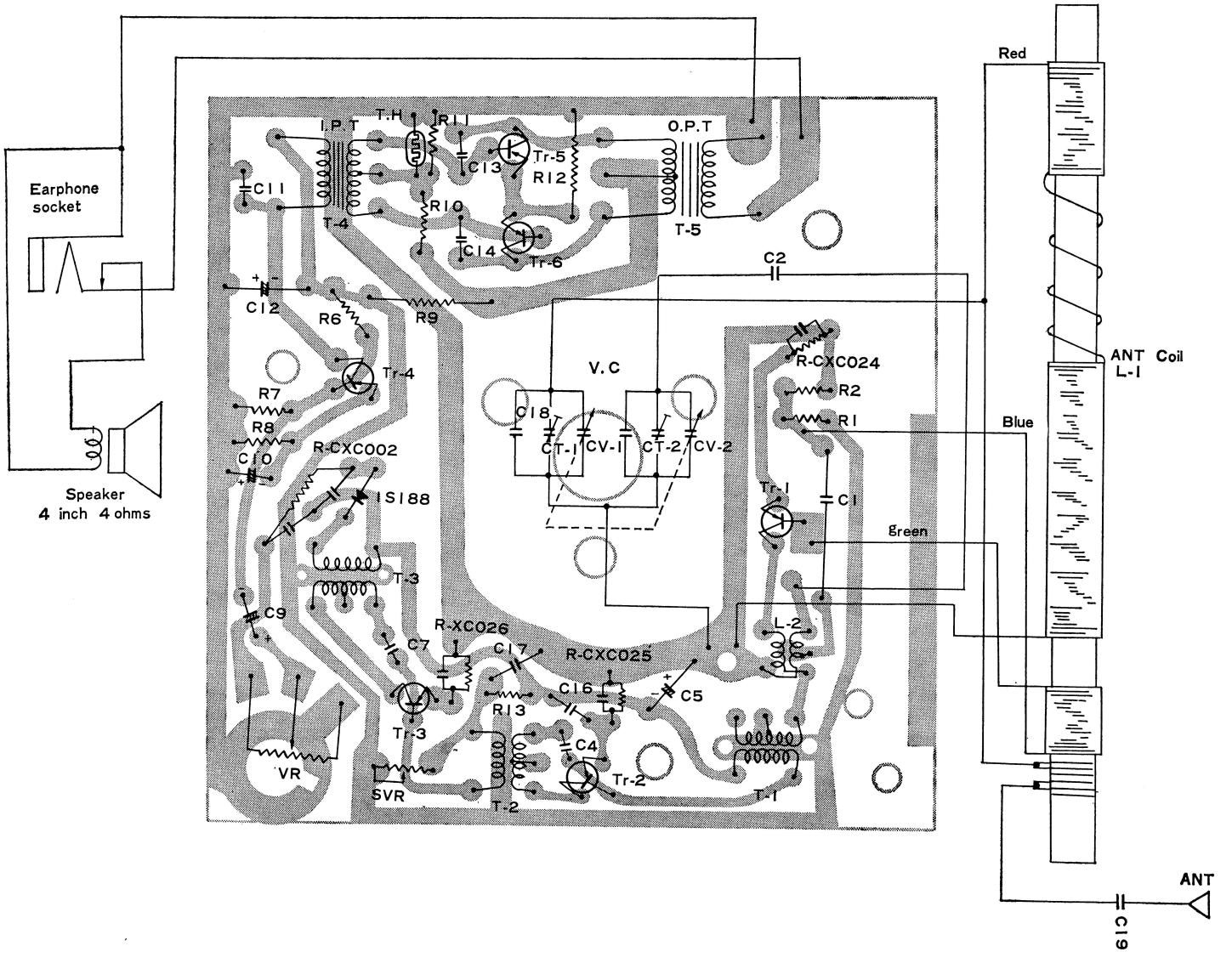

CIRCUIT DIAGRAM

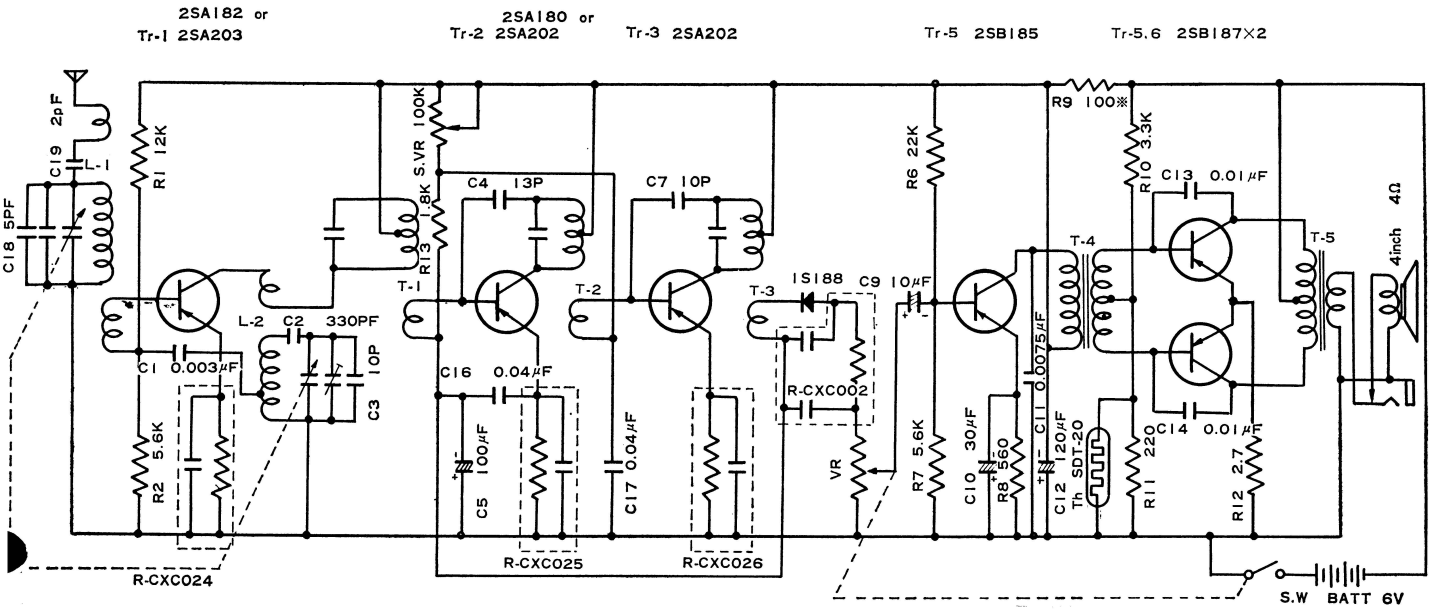

All resistance values in ohms, K = 1000 ohms

Tolerance of resistance value : no mark ± 10% ※ mark ± 20%
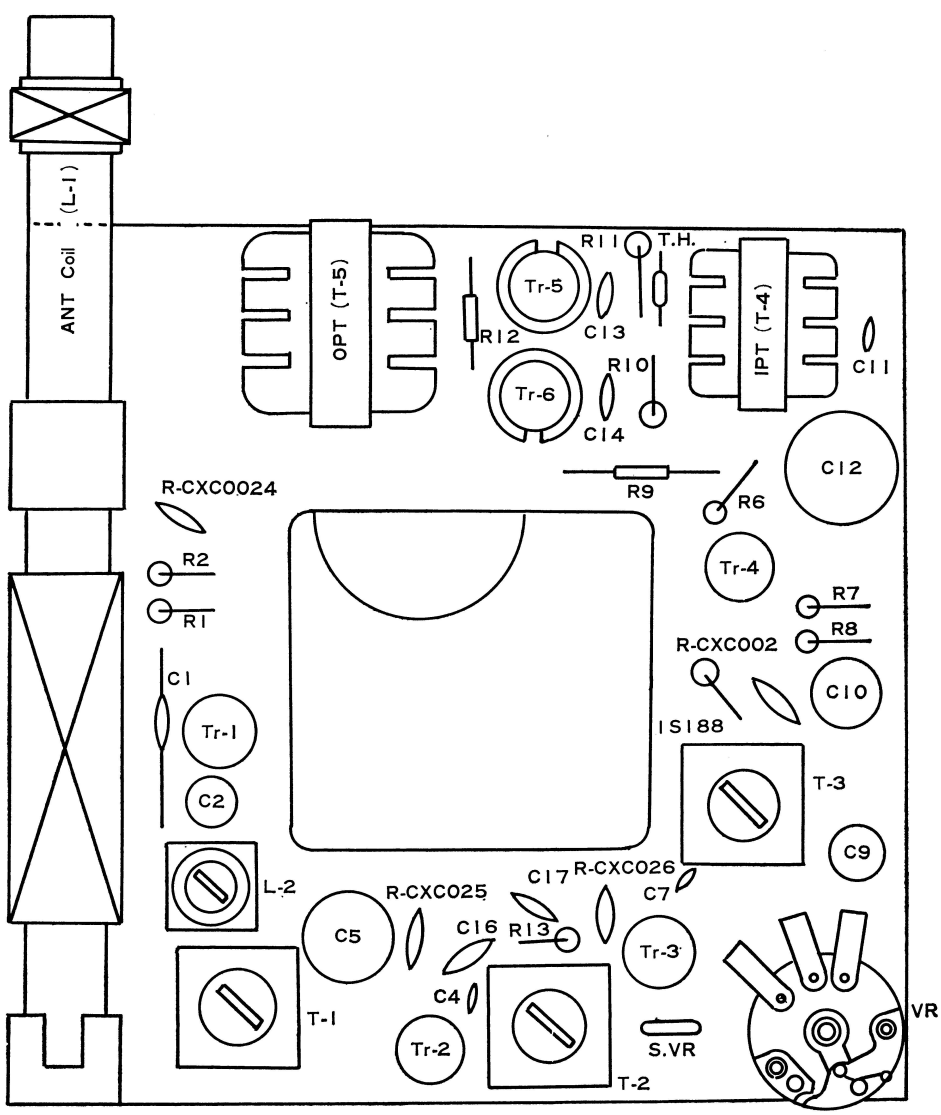
MAIN PARTS LOCATION