SANYO *All-transistor Radio* **MODEL 6C-022**

Service Manual

SPECIFICATION

WAVE RANGE	540–1,600 kc	
INTERMEDIATE FREQUENCY	455 kc	
TRANSISTOR COMPLEMENT		
	1×2 SA 52	Oscillator & Frequency Converter
	1×2 SA 49	1st IF Amplifier
	1×2 SA 53	2nd IF Amplifier
	1×2 SB 54	AF Amplifier
	2×2 SB 56	Power Amplifier (B class pushpull)
GERMANIUM DIODE	1 N 60	Detector & A. G. C.
POWER OUTPUT	Undistorted	40 mW
	Maximum	60 mW
RADIATION SENSITIVITY	Lower Limit for 10 mW output 710 μV/m (77 db)	
BATTERY USED	9-volt Neda 1604, Eveready 216, Ray-O-Vac 1604, JIS BL-006P, Burgess 1604 or similar	
CURRENT DRAIN	8.5 mA – 20 mA	
LOUDSPEAKER	2-inch Permanent Dynamic Voice Coil Impedance 8 ohms at 1,000 cycles	
CABINET DIMENSION	Width	60 mm (2¼″)
	Height	97 mm (4″)
	Depth	28 mm (1″)
NET WEIGHT	212 grams (7 ½ ounces) incl. battery	

SANYO ELECTRIC CO., LTD.

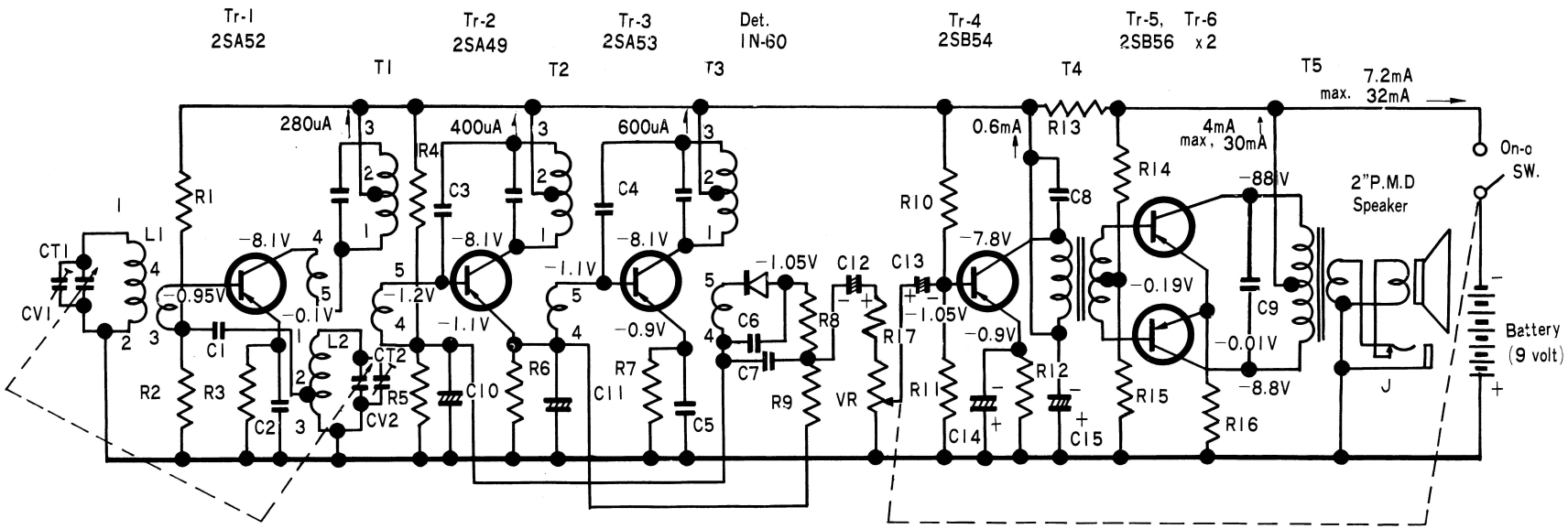

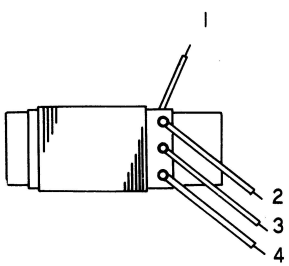

ANTENNA ASSEMBLY (L1)

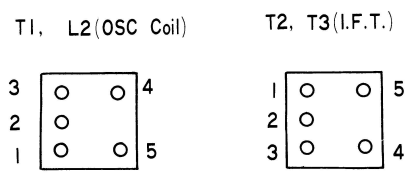

TERMINAL CONNECTION FOR L2 T1 T2 T3

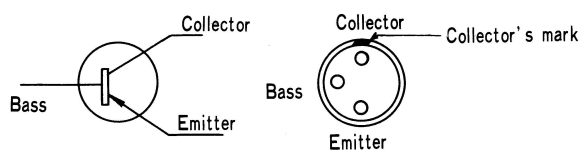

PRINTED IN JAPAN

ALIGNMENT PROCEDURE

Output meter alignment :

Connect the volt-meter with the both ends of the voice coil, and the volume control at maximum.

Test oscillator :

For all alignment operations, connect the low side of the test oscillator to the receiver printed base and keep the oscillator output as low as possible to avoid A. G. C. action.

Step	Connect HIGH side of SIG. GEN. to :-	SIG. GEN. output	Dial pointer setting	Adjust for Maximum output
1	Connection lug of CV1 ANT side section of VC in series with 0.1 mfd.	455 kc	Quiet point near 530 kc	IF Trans. T 3 T 2 T 1
2	Short wire placed near antenna for radiated signal.	530 kc	gang fully closed	O. S. C. coil L 2
3		1650 kc	gang fully open	O. S. C. trimmer CT 2
4		Repeat Steps 2 and 3.		
5			600 kc signal	ANT coil L 1
6		1400 kc	1400 kc signal	ANT trimmer CT 1
7		Repeat step 3 and 4.		

PARTS LIST

TRANSISTORS

PART No.	ORIGINAL TYPE	DESCRIPTION
Tr 1	2SA52	Oscillator & Frequency Converter
Tr 2	2SA49	1st IF Amplifier
Tr 3	2SA53	2nd IF Amplifier
Tr 4	2SB54	AF Amplifier
Tr 5	2SB56	Power Amplifier
Tr 6	2SB56	Power Amplifier

GERMANIUM DIODE

PART No.	ORIGINAL TYPE	DESCRIPTION
Det	1 N 60	Detector and A. G. C.

VARIABLE CAPACITOR

PART No.	STOCK No.	REMARKS
VC 1 VC 2	R-C1031	with Trimmer CT 1 & CT 2

VOLUME CONTROL

PART No.	STOCK No.	REMARKS
VR	R-11606	with switch

COILS

PART No.	STOCK No.	DESCRIPTION
L 1	R-W 2051	Antenna Coil
L 2	R-W 8006	Oscillating Coil

TRANSFORMER

PART No.	STOCK No.	DESCRIPTION
T 1	R-W5 T032	I. F. T.
T 2	R-W5 T033	I. F. T.
T 3	R-W5 T034	I. F. T.
T 4	R-W6064	O. P. T.
T 5	R-W6063	I. P. T.

FIXED RESISTORS

PART No.	RATING OHMS	RATING WATT	TSLERANCE	DESCRIPTION
R 1	40K	¼	± 10%	
R 2	3.5K	½	± 10%	
R 3	2.2K	½	± 10%	
R 4	90K	¼	± 10%	
R 5	18K	¼	± 10%	
R 6	2.2K	¼	± 10%	
R 7	1K	¼	± 10%	
R 8	200	¼	± 10%	
R 9	5.6K	½	± 10%	
R 10	28K	½	± 20%	
R 11	4K	½	± 20%	
R 12	1K	½	± 20%	
R 13	200	¼	± 10%	
R 14	4.5K	¼	± 10%	
R 15	100	¼	± 10%	
R 16	10	¼	± 10%	
R 17	3.5K	½	± 20%	

FIXED CAPACITORS

PART No.	STOCK No.	RATING CAP	RATING VOLT	DESCRIPTION
C 1	R-C8S5303P	0.003 μf		Polyestel
C 2	R-C8S5103M	0.01 〃		Polyestel
C 3	R-C3S4508D	5 pf		Ceramic
C 4	R-C2S4508D	5 pf		Ceramic
C 5	R-C2S4403P	0.04 μf		Polyestel
C 6	R-C8S5103P	0.01 〃		Polyestel
C 7	R-C8S5103P	0.01 〃		Polyestel
C 8	R-C8S5502P	0.005 〃		Polyestel
C 9	R-C2S4203P	0.02 〃		Ceramic

ELECTROLYTIC CAPACITORS

PART No.	STOCK No.	RATING CAP	RATING VOLT	DESCRIPTION
C 10	R-C9V1106P	10 μf	3	
C 11	R-C9V1106P	10 〃	3	
C 12	R-C9V1106P	10 〃	3	
C 13	R-C9V1106P	10 〃	3	
C 14	R-C9V1106P	10 〃	3	
C 15	R-C9V1506P	50 〃	9	

SPEAKER

PART No.	STOCK No.	TYPE SIZE	TYPE FIELD	TYPE V. C. IMP.
SP	R-S6056	2″	P. D.	8 ohms

MISCELLANEOUS
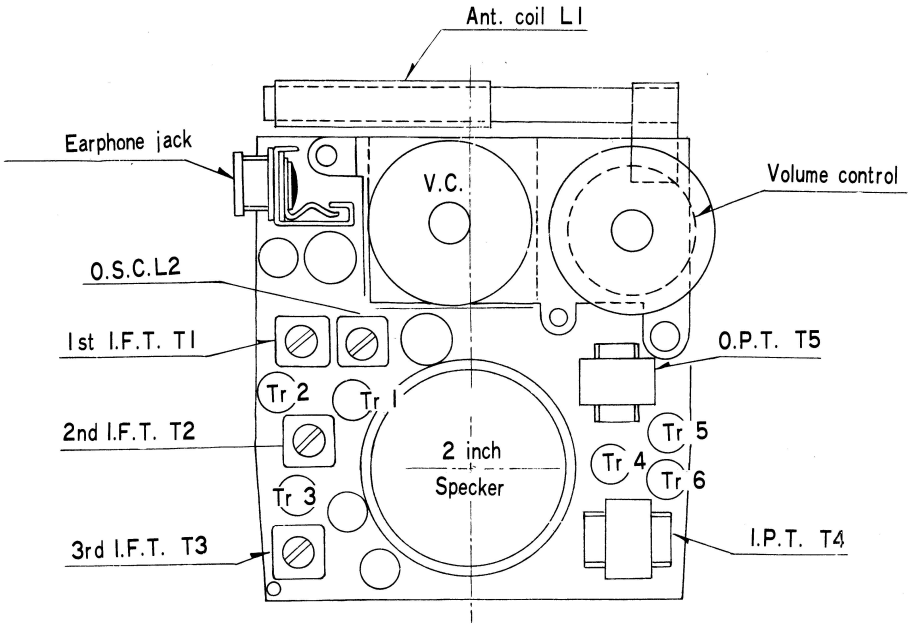
PART No.	STOCK No.	DESCRIPTION
M 1	R-S6065	Earphone with plug
M 2	R-S1027	Battery Snap Terminal