AUTOVOX 7 & 8 TRANSISTOR CAR RADIOS
MODEL 672 - 673 - 675 SINGLE ENDED OUTPUT
MODEL 674 - 678 PUSH-PULL OUTPUT

AUDIO SECTION FOR

MODEL 674 and 678

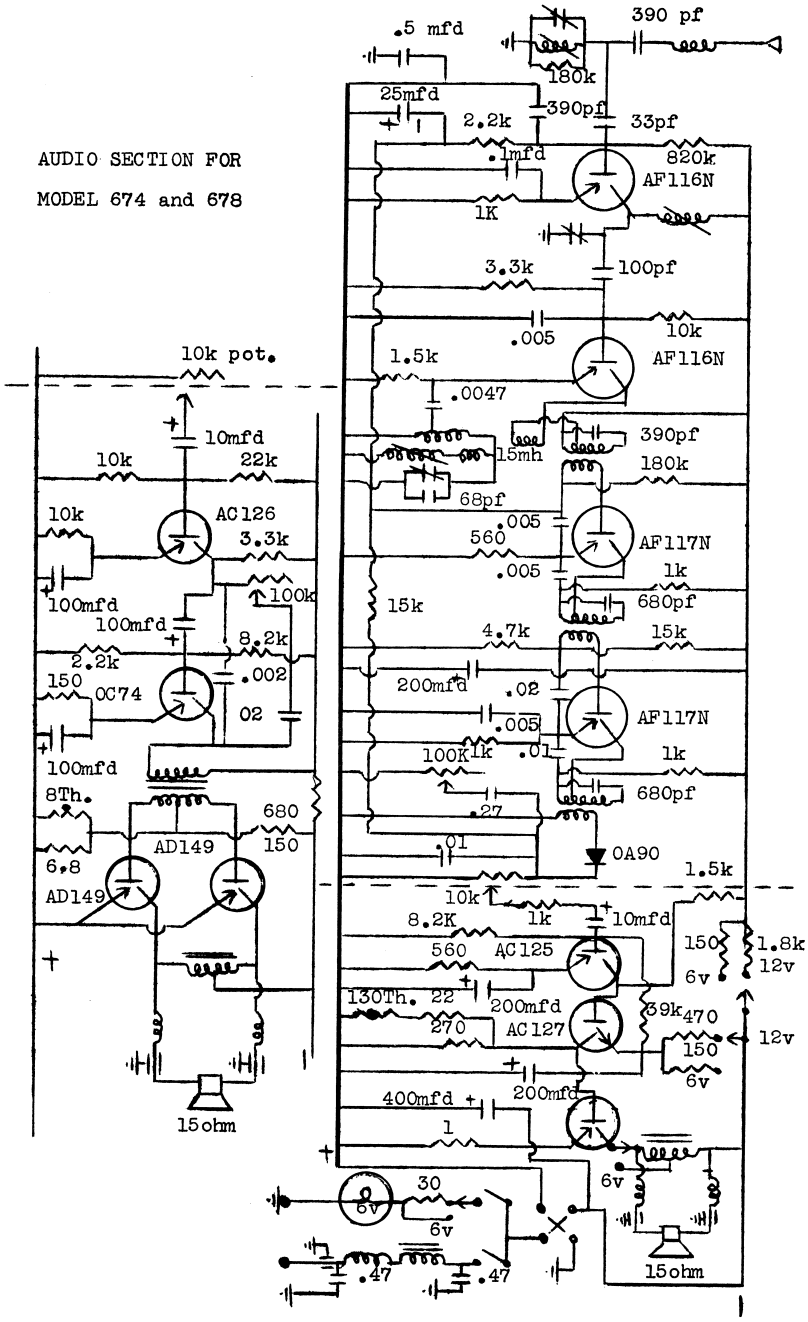

AUDIO SECTION

To be used in conjunction with RF section of Autovox Model 672

12 VOLT ONLY
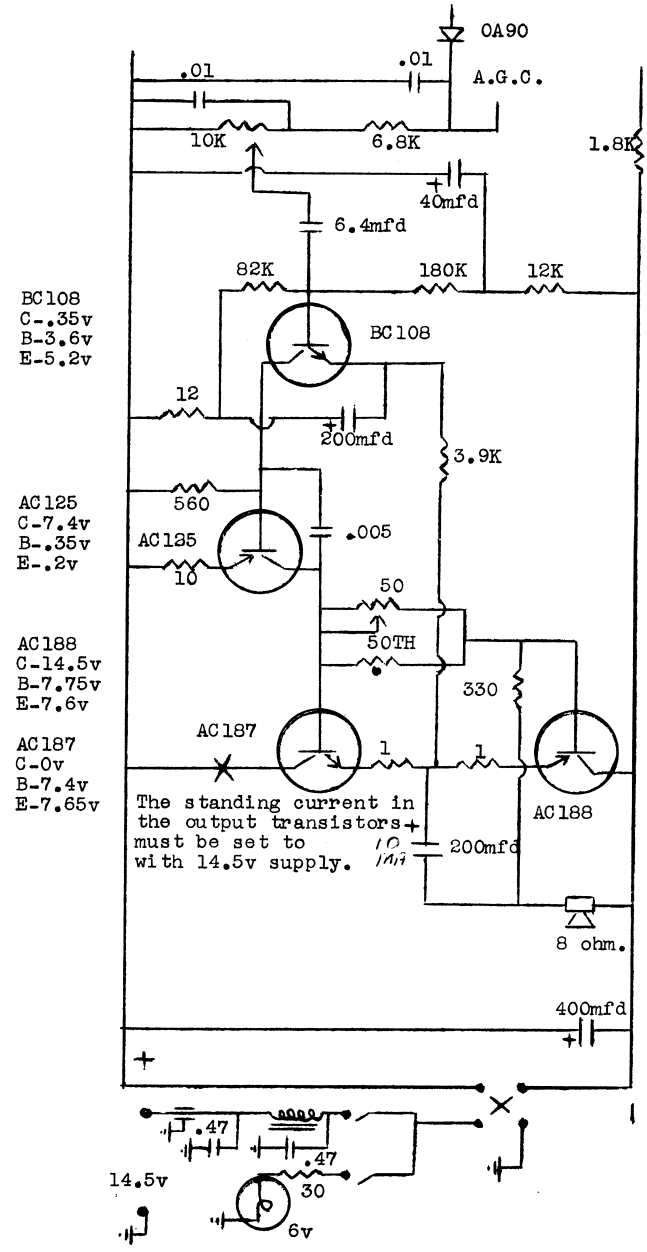
A103