RADIO SERVICE BULLETIN

Issue No. 138
Date of Issue:
Subject: Model

SPECIFICATION OF S.T.C. MODEL A6481

CONSOLE RADIOGRAM

DESCRIPTION:

TUNING RANGE)
INTERMEDIATE FREQUENCY)
POWER SUPPLY)
LOUDSPEAKER) Refer to Service Bulletin on Model
MEASUREMENT SPECIFICATION) A6461 No. 119
ALIGNMENT FREQUENCIES)
CHECK POINTS)
ALIGNMENT PROCEDURE)

VALVE COMPLEMENT:

V1 R.F. Amplifier 6BA6
V2 Converter 12AH8
V3 I.F. Amplifier, Detector and A.G.C. 6N8
V4 Audio Amplifier and Tone Control 12AX7
V5 Power Output Beam Tetrode 6L6 GA
V6 Rectifier 5Z4G

CIRCUIT VOLTAGES:

Refer to Circuit Diagram

These voltages may vary within 10% of their stated value.
Measuring meter must be at least 20,000 ohms per volt.

STEREOPHONIC REPRODUCTION:

Provision has been made on this receiver for the possibility of playing stereophonic records by providing at the rear of the cabinet, a socket marked – "TO STEREO. CONVERTER".
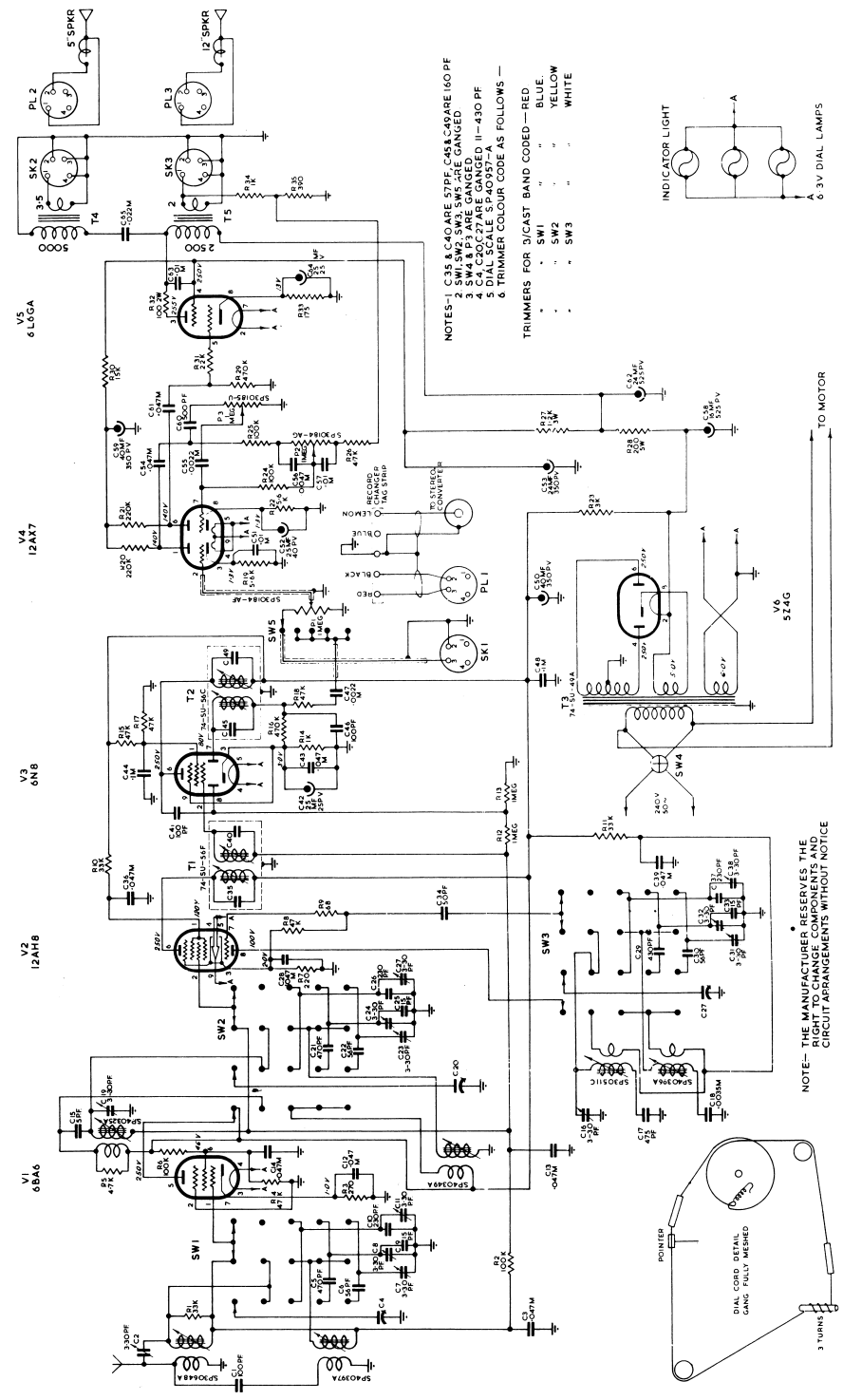
MODEL 6481
CONSOLE RADIOGRAM