Stromberg-Carlson

STROMBERG-CARLSON
SERVICE BULLETIN, No. 58

Stromberg-Carlson Model 58 Superheterodyne

BROADCAST RECEIVER

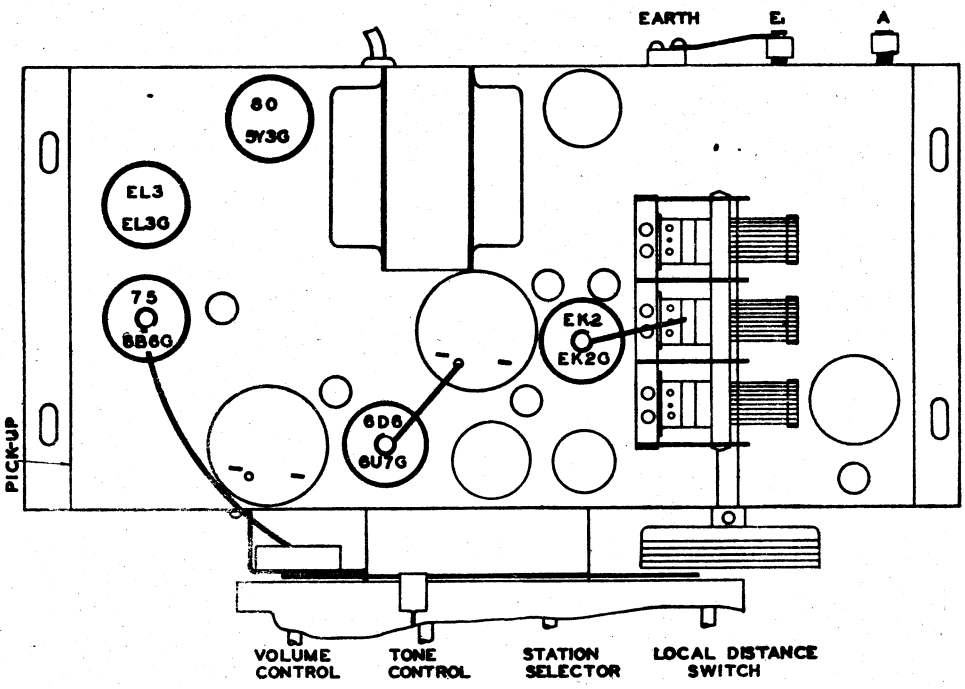

Chassis of Model 58

This Service Bulletin is issued free of charge to all authorised Stromberg-Carlson Dealers. Applications for additional copies should be made direct to the nearest Distributor.

Stromberg-Carlson (A'asia) Pty. Ltd. reserves the right to make changes in design details at any time without incurring any obligations to install same on radio receivers previously sold.

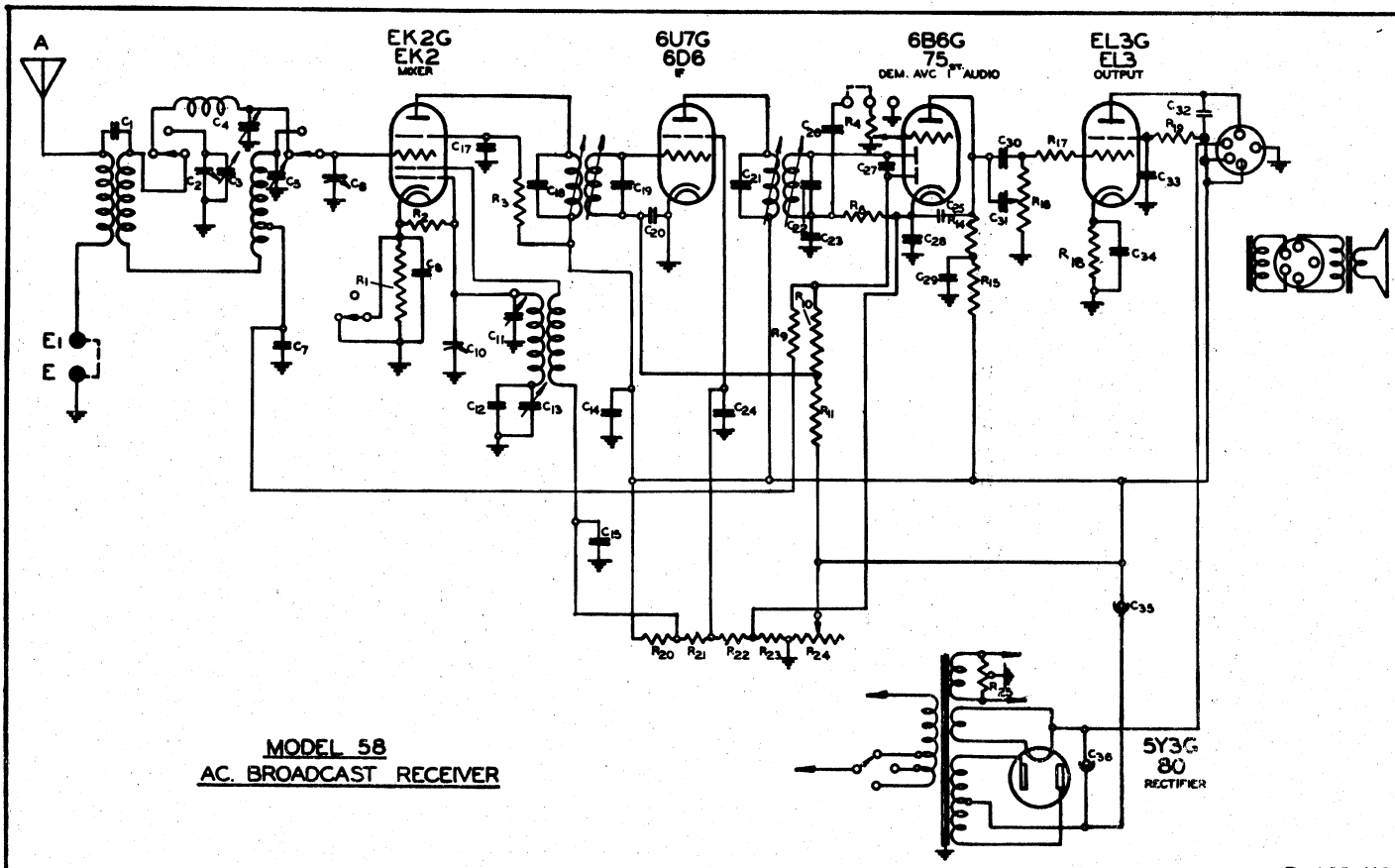

MODEL 58
AC. BROADCAST RECEIVER

CHANGES

STROMBERG-CARLSON (AUSTRALASIA) PTY. LTD.
SYDNEY, AUSTRALIA.

DRAWN. B.M.Martin.
EXAMINED 8-7-30.
APPROVED.
DATE 22-9-38.

DRAWING NO 2179

LOCATION OF COILS & TRIMMERS BENEATH CHASSIS

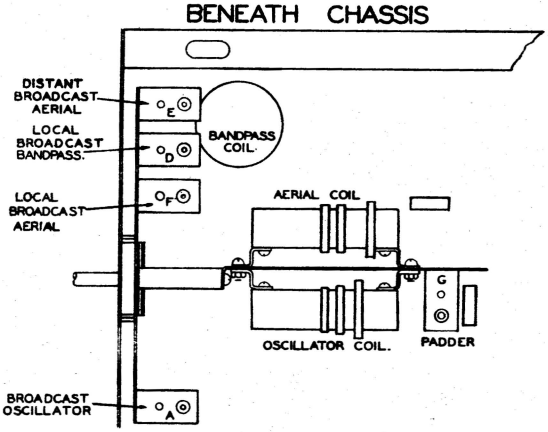

The Local Distant Switch has two positions which will be referred to as positions 1 and 2. Position 1 is in an extreme clockwise direction, and 2 in an anti-clockwise direction.

<u>IF Alignment:</u> Turn the volume control full on and the local Distant Switch to position 2. Set the test oscillator to 465 KC and connect to grid of the EK2 valve. Adjust the four IF trimmers for maximum gain.

<u>Broadcast Band:</u> First align the receiver for local broadcast reception. Turn the LD switch to position 2 and connect the oscillator to the aerial terminal.

1. Adjust test oscillator to 1500 KC, turn receiver dial to 1500 KC and adjust trimmer A (See drawing) for maximum output.

2. Set test oscillator to 1400 KC, tune it in on the receiver and adjust trimmers D and F for maximum gain.

3. Set test oscillator to 600 KC, tune it in on the receiver and adjust the padder G whilst rocking the gang to and fro about 600 KC.
   Repeat the three operations.

Next align the receiver for distant broadcast reception. Turn the LD switch to position 1.

1. Put test oscillator on 1400 KC, tune it in on the receiver and without adjusting trimmers A, D, and F, adjust E for maximum gain. This completes the broadcast aligning.

CIRCUIT CODE MODEL 58

C	Part No.	Item
C1	33/102	4 uuF
C2	724/19	3 Gang Type F
C3	1/303	Air Trimmer
C4	1/303	Air Trimmer
C5	1/303	Air Trimmer
C6	724/19	3 Gang Type F
C7	526/2104	.1 uF
C8	526/2104	.1 uF
C9		
C10	724/19	3 Gang Type F
C11	1/303	Air Trimmer
C12	526/63	425 uuF
C13	1/304	Padder
C14	526/23	.5 uF
C15	526/2104	.1 uF
C16		
C17	526/2104	.1 uF
C18	526/60	250 uuF
C19	526/59	150 uuF
C20	526/2104	.1 uF
C21	526/59	150 uuF
C22	526/60	250 uuF
C23	526/1	100 uuF
C24	526/2104	.1 uF

C	Part No.	Item
C25	526/9	.001 uF
C26	526/15	.01 uF
C27	526/1	.0001 uF
C28	526/4804	10 uF Electrolytic
C29	526/23	.5 uF
C30	526/9	.001 uF
C31	526/15	.01 uF
C32	526/1302	.005 uF
C33	526/2104	.1 uF
C34	526/4804	10 uF Electrolytic
C35	526/50	16 uF Electrolytic
C36	526/50	16 uF Electrolytic

R	Part No.	Item
R1	573/1917	200 w
R2	573/1912	.05 Mw
R3	573/212	.15 Mw
R4	573/6	1 Mw (Volume)
R5		
R6	573/1915	.5 Mw
R7		
R8		
R9	573/1916	1 Mw
R10	573/1915	.5 Mw
R11	573/1915	.5 Mw
R12		
R13		
R14	573/202	.2 Mw
R15	573/200	.05 Mw
R16	573/8	.5 Mw (Tone)
R17	573/1913	.1 Mw
R18	573/26	150 w
R19	573/196	4000 w
R20)		
R21)		
R22)	599/19	Voltage Divider
R23)		
R24)		

OPERATION: Looking at the front of the chassis and reading from left to right the four controls are as follows:- Volume — Tone — Station Selector -- Local Distance Switch.

Local Distance Switch: This has two positions. The extreme left (anti-clockwise) position is for local broadcast reception 1500 to 550 KC's; the right position for distant broadcast reception.

Tone Control: Turn the knob clockwise to increase the high frequency response of the receiver.

Pick-up Jacks: These are located at the left hand end of the chassis. To use a pick-up, remove the metal bar between the centre and back jacks and insert the pick-up leads in the centre and front jacks. The tone and volume controls both operate the pick-up. Replace the shorting bar in its original position when the radio is to be used again.

Voltage Adjustment Panel: Before leaving the factory the voltage switch is set to the 240 volt setting. If the line voltage differs from this the switch should be set to the position nearest to, but not less than the measured line voltage in the locality. The voltage tappings for 200, 240 and 260 volts are designated on the back of the chassis. The adjustment is readily carried out with a screw driver on removing the danger plate. When making any adjustment SEE THAT THE POWER PLUG IS COMPLETELY REMOVED FROM THE SOCKET OF THE SUPPLY SOURCE.

VALVES AND VOLTAGES

The location of all valves is shown on the first page.

VALVE		PLATE	SCREEN	CATHODE	BACK BIAS
EK2G - EK2	Mixer				
	Octode ..	250	50	--	-3
	Triode ..	200	—	--	--
6U7G - 6D6	IF	250	90	--	-3
6B6G - 75.	Dem.AVC.1st Audio	100	--	1.5	--
EL3G - EL3	Output	235	240	6	--

ALIGNMENT INSTRUCTIONS

Refer to the drawings of chassis and coil unit for the location of all trimming screws. There are two on each IF transformer and five on the coil assembly. No attempt should be made to adjust these unless a competent service man equipped with a calibrated test oscillator is available.