"Airzone" A.C./D.C. Dual-Wave Models 559, 579

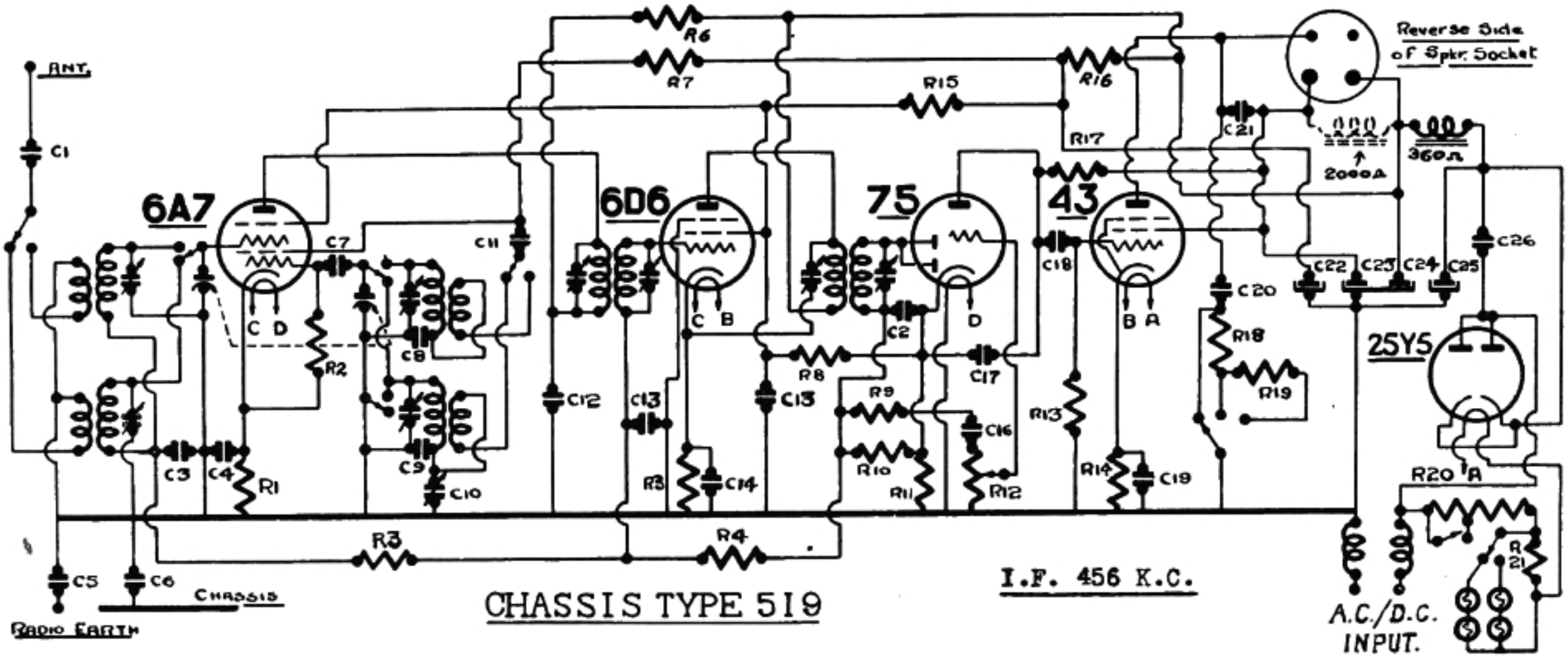

Airzone models 559 (1937) and 579 (1938) are basically similar consoles and employ chassis type 519.

COMPONENT VALUES

RESISTORS.

R1, R5—400 ohms, ½ W.; **R2**—100,000 ohms, ¼ W.; **R3**—250,000 ohms, ¼ W.; **R4**—1 megohm,, ¼ W.; **R6**—4,000 ohms, ½ W.; **R7**—10,000 ohms, ½ W.; **R8**—20,000 ohms, ½ W.; **R9**—50,000 ohms, ¼ W.; **R10, R13**—500,000 ohms, ¼ W.; **R11**—200 ohms, ½ W.; **R12**—500,000 ohms, volume control; **R14**—500 ohms, 1 W.; **R15, R16**—5,000 ohms, 1 W.; **R17**—250,000 ohms, ½ W.; **R18**—5,000 ohms, ¼ W.; **R19**—15,000 ohms, ¼ W.; **R20**—500 ohms, tap 90 ohms, w.w.; **R21**—60 ohms, w.w.

CONDENSERS.

C1, C5, C21—5,000 mmfd., mica; **C2**—250 mmfd., mica; **C3, C13, C20**—0.05 mfd., 400 v., paper; **C4, C12**—0.1 mfd., 400 v., paper; **C6**—0.08 mfd., 600 v., paper; **C7**—50 mmfd., mica; **C8**—7,025 mmfd. ± 1% mica, S.W. padder; **C9**—300 mmfd. ± 3%, mica, B.C. padder shunt; **C10**—3 plate B.C. padder; **C11, C17**—500 mmfd., mica; **C14**—0.2 mfd., 200 v., paper; **C15, C18**—0.02 mfd., 400 v., paper; **C16**—0.01 mfd., 400 v., paper; **C19**—10 mfd. electro, 25 v. W.; **C22**—8 mfd., 440 v., W., electro; **C23, C24**—8 mfd., 450 v., W., electros. in one can; **C25**—8 mfd., 500 v., W., electro; **C26**—0.01 mfd. mica.