HIS MASTER'S VOICE 537

(Incorporating Chassis Type A 536 D/S)

5V., D/W, A.C., Mantel

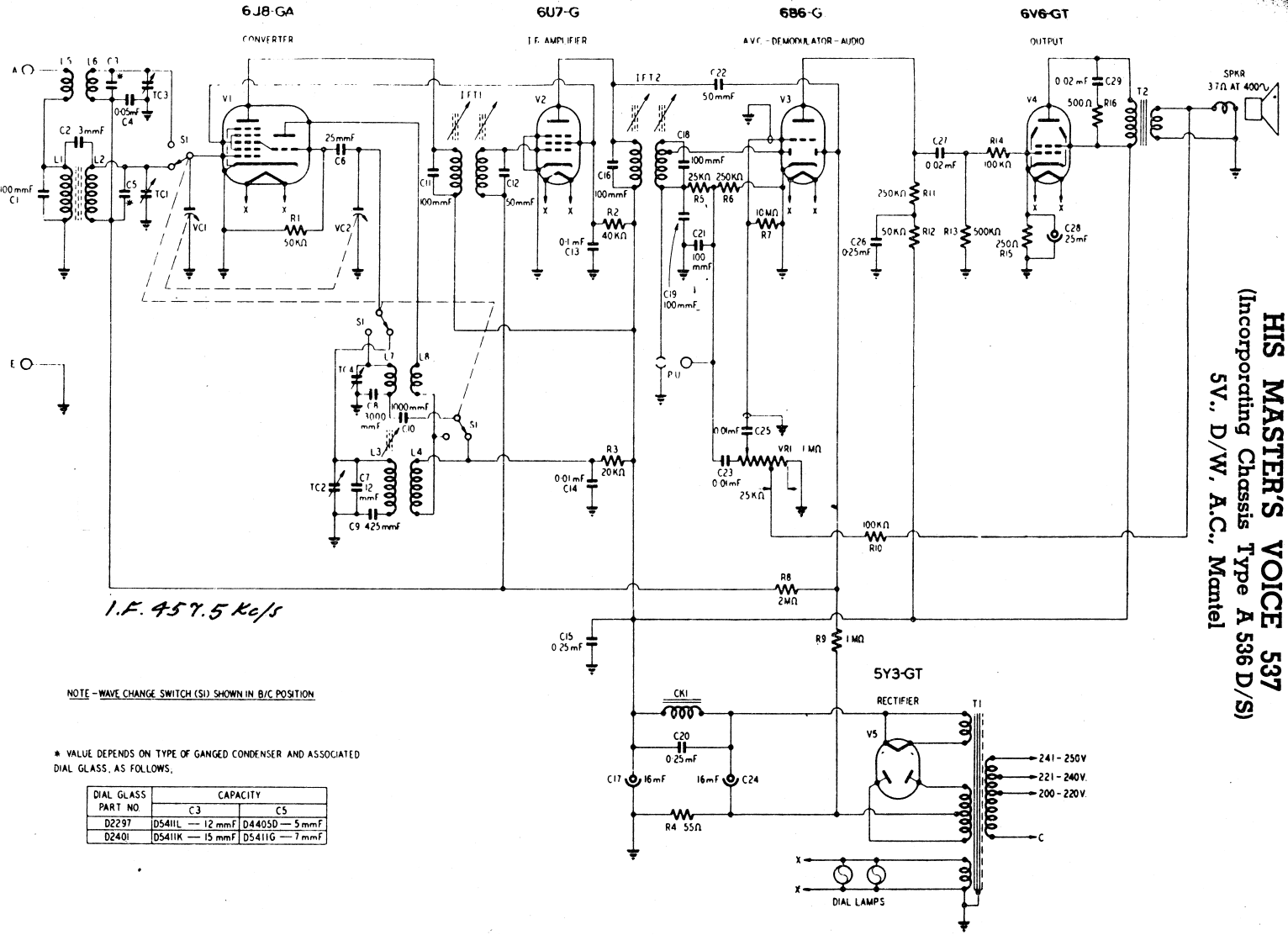

* VALUE DEPENDS ON TYPE OF GANGED CONDENSER AND ASSOCIATED DIAL GLASS, AS FOLLOWS,

DIAL GLASS PART NO.	CAPACITY	
	C3	C5
D2297	D5411L — 12 mmF	D4405D — 5 mmF
D2401	D5411K — 15 mmF	D5411G — 7 mmF

CONDENSERS

C1 100 mmF. ± 10%
C2 3 mmF. ± 0.5 mmF.
C3
C4 .05 mF. 200V. wkg.
C5
C6 25 mmF. ± 10%
C7 12 mmF. ± 10%
C8 3000 mmF ± 100 mmF.
C9 425 mmF. ± 5 mmF.
C10 1000 mmF. ± 10%
C11 100 mmF. ± 5%
C12 50 mmF. ± 5%
C13 .1 mF. 400V. wkg.
C14 .01 mF. 600V. wkg.
C15 .25 mF. 400V. wkg.
C16 100 mmF ± 5%
C17 16 mF. 525PV.
C18 100 mmF. ± 5%
C19 100 mmF. ± 10%
C20 .25 mF. 200V. wkg.
C21 100 mmF. ± 10%
C22 50 mmF. ± 10%
C23 01 mF. 600V. wkg.
C24 16 mF. 525 PV.
C25 .01 mF. 600V. wkg.
C26 .25 mF. 400V. wkg.
C27 .02 mF. 400V. wkg.
C28 25 mF. 40PV.
C29 .02 mF. 600V. wkg.

VC1-2 2 Gang Condenser with Dial Glass
or
2 Gang Condenser with Dial Glass
VR1 1 Megohm Potentiometer tapped at 25,000 ohms.
S1 3-pole 2-position Switch.
IFT.1 1st I.F. Transformer.
IFT.2 2nd I.F. Transformer.
Dial Lamps. 6.3 V., 0.25 amp. S.C. Lamp.
T1 Mains Transformer.
T2 Output Transformer.
CK.1 H.T. Filter Choke.
L1-2 B/C Aerial Coil.
L3-4 B/C Osc. Coil.
L5-6 S-W Aerial Coil.
L7-8 S-W Osc. Coil.

TC.1 Trimmer Condenser.
TC.2 Trimmer Condenser.
TC.3 Trimmer Condenser.
TC.4 Trimmer Condenser.

R1 50,000 ohms ¼ watt ± 10%
R2 40,000 ohms 1 watt ± 10%
R3 20,000 ohms 1 watt ± 10%
R4 55 ohms 1 watt ± 10%
R5 25,000 ohms ¼ watt ± 10%
R6 250,000 ohms ¼ watt ± 10%
R7 10 megohms 1 watt ± 10%
R8 2 megohms ¼ watt ± 10%
R9 1 megohm ¼ watt ± 10%
R10 100,000 ohms ¼ watt ± 10%
R11 250,000 ohms 1 watt ± 10%
R12 50,000 ohms 1 watt ± 10%
R13 500,000 ohms ¼ watt ± 10%
R14 100,000 ohms ¼ watt ± 10%
R15 250 ohms 1 watt ± 10%
R16 500 ohms ½ watt ± 10%

POWER SUPPLY:
200 to 250 volts. 40 to 50 cycles.

CONSUMPTION:
43 watts.

FREQUENCY RANGE:
Broadcast: 540 Kc/s to 1600 Kc/s.
Short-Wave: 16.5 metres to 53 metres.

I.F. FREQUENCY:
457.5 Kc/s.

VALVE COMPLEMENT:
6J8GA Converter.
6U7G I.F. Amplifier.
6B6G Demod., AVC, Audio Amplifier.
6V6GT Power.
5Y3GT Rectifier.

DIAL LAMPS (2):
6.3 volts 0.15 to 0.3 amps.

LOUDSPEAKER:
5-inch Permagnetic. 3.7 ohm voice coil impedance at 400 cycles.

FREQUENCY CHANGER

The aerial, on the broadcast band, is coupled to the signal frequency circuit by means of the iron dust cored aerial transformer L1—L2. For short-wave reception the short-wave aerial transformer L5—L6 is switched into circuit.

A triode heptode V1 is employed as frequency changer. Fixed padding capacitors are used on both bands. A variable padding adjustment is provided on the broadcast band by means of an iron dust tuning bolt in the broadcast oscillator coil L3—L4.

I.F. AMPLIFIER

The converter valve is transformer coupled to a super control pentode V2. This valve is in turn transformer coupled to one diode section of a duo diode triode V3. Both I.F. transformers IFT1 and IFT2 are permeability tuned and have fixed tuning capacitors.