All-Electric Superhet 6-Valve, Type 50

AUTODYNE USING 2/57, 2/58, 1/47, 1/80 VALVES.

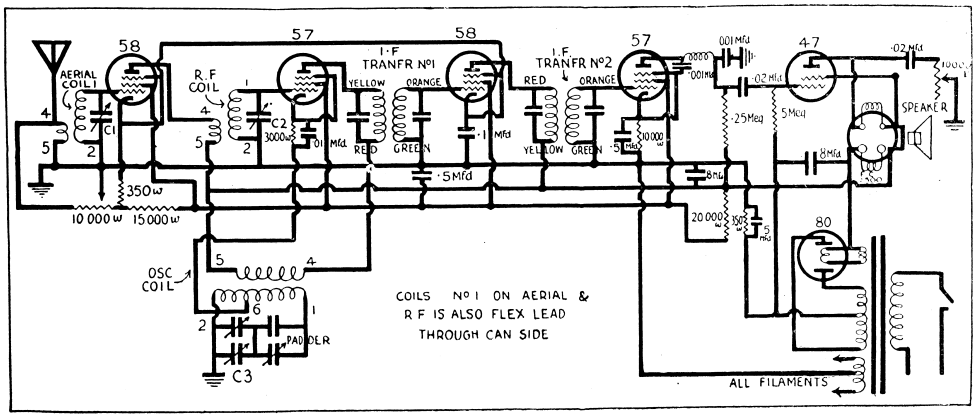

KIT TYPE 5-50
COMPRISES THE FOLLOWING:

RADIOKES COIL—KIT TYPE 5-50, comprises the following:—

1 Aerial Coil, Shielded.
1 Oscillator Coil, Shielded.
1 R.F. Coil, Shielded.
1 3-Gang Condenser.
1 Padding Condenser.
2 I.F. Transformers.

PRICE: £4/15/-

RADIOKES KIT-SET TYPE 12-50, comprises:—

(1) Coil Kit 6-50, as above.
(2) Chassis, complete with sockets.
(3) 2 Resistors, 350 ohm., Radiokes Types 4-14N.
(4) 1 Resistor, 3,000 ohm., Radiokes Type 4-54N.
(5) 1 Resistor, 10,000 ohm., Radiokes Type 4-57N.
(6) 1 Resistor, 15,000 ohm., Radiokes Type 4-56N.
(7) 1 Resistor, 20,000 ohm., Radiokes Type 4-56N.
(8) 1 Volume Control, 10,000 ohm., Radiokes Type 8-1.
(9) 1 Leak—500,000 ohms.
(10) 1 Leak—250,000 ohms.
(11) 1 R.F. Choke, Radiokes Type 3-20.
(12) 1 Condenser Block, 3 x 0.5 mfd.
(13) 1 Condenser, .01 mfd.
(14) 1 Condenser, .002 mfd.
(15) 2 Condensers, .001 mfd.
(16) 2 Condensers, Electrolytic, 8 mfd.
(17) 1 Power Transformer, Radiokes Type 1-21.
(18) 1 Toggle Switch, single pole.
(19) 1 Dial, Full Vision, Radiokes Type 7-6, 7-7, or 7-8.
(20) 4 Yards Hook-up Wire.

PRICE: £9/2/6
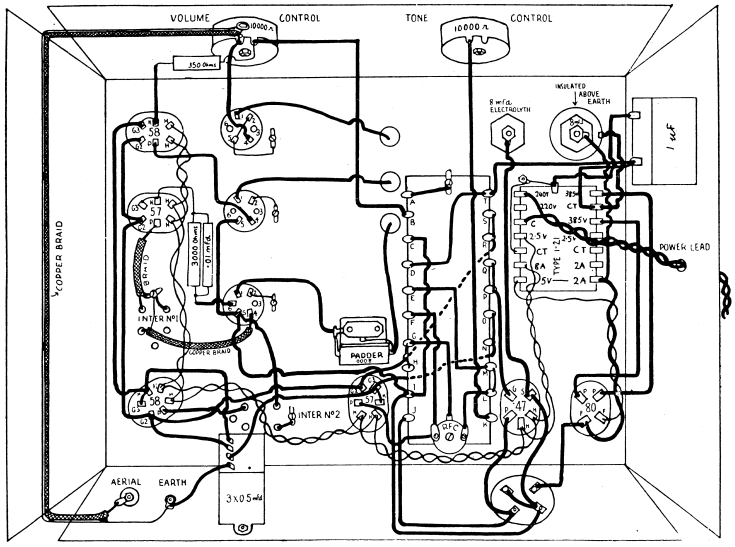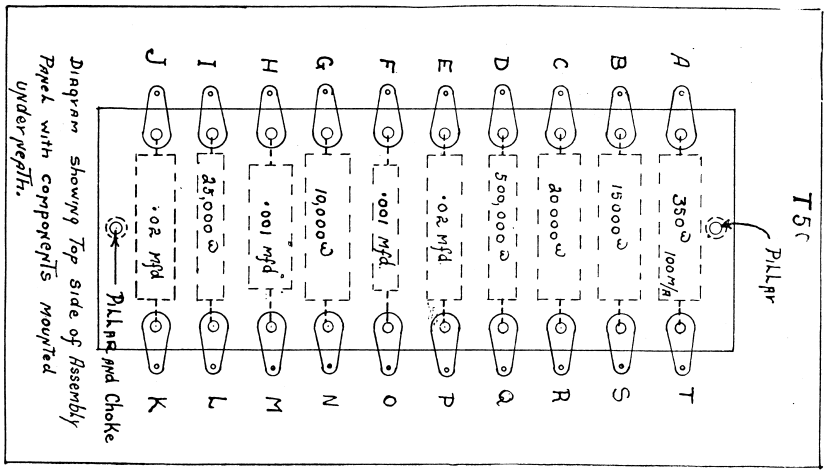
N.B.—The Chassis Kit 12-50 does not include Valves or Dynamic Speaker. The Valves are detailed at the top of the page, whilst the speaker must have 8,000 ohm. input impedance, and 2,500 ohm. field.