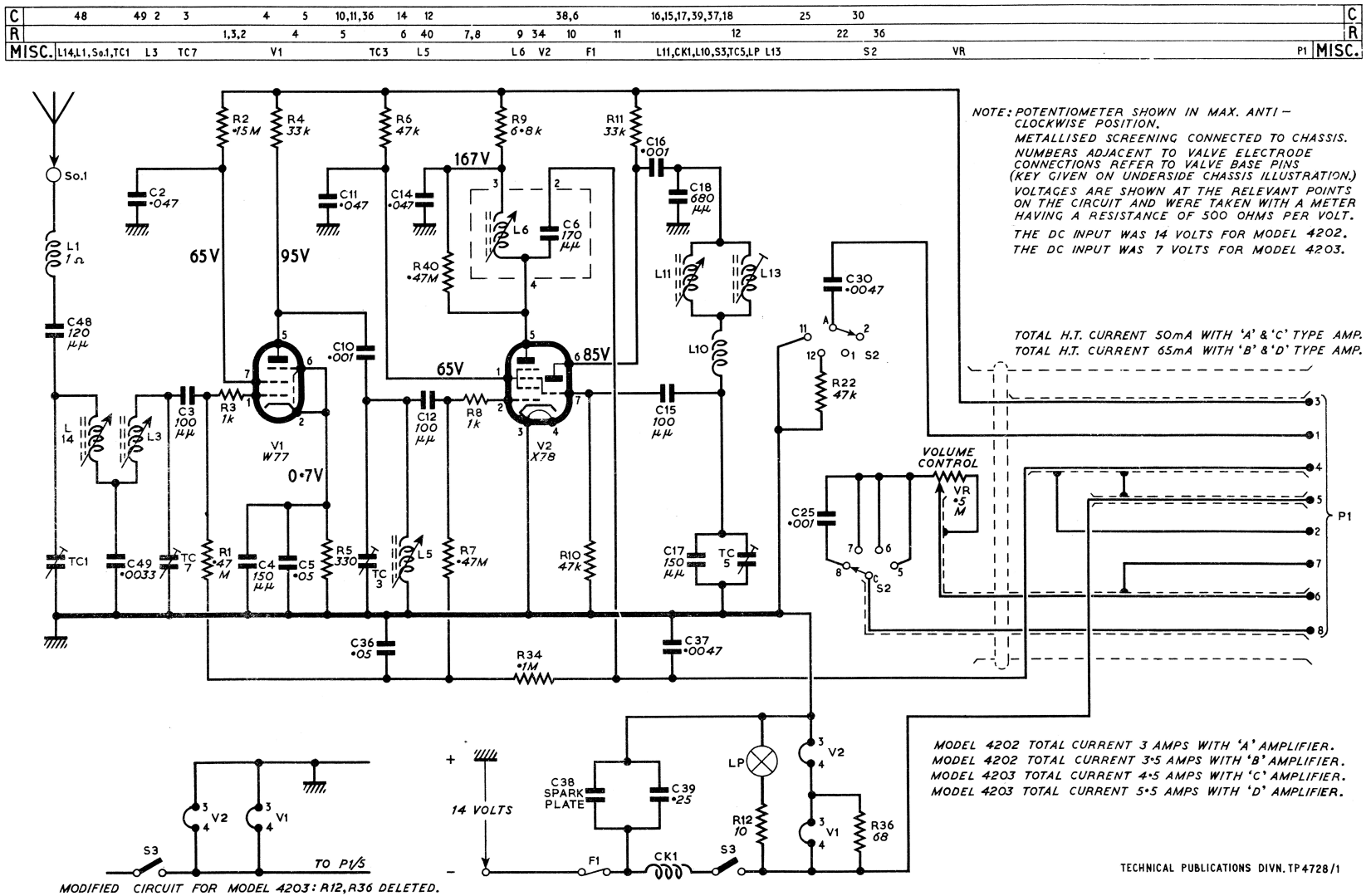

CIRCUIT FOR 4202-3 CONTROL UNIT