* R36 USED ON MODEL 4202 ONLY.

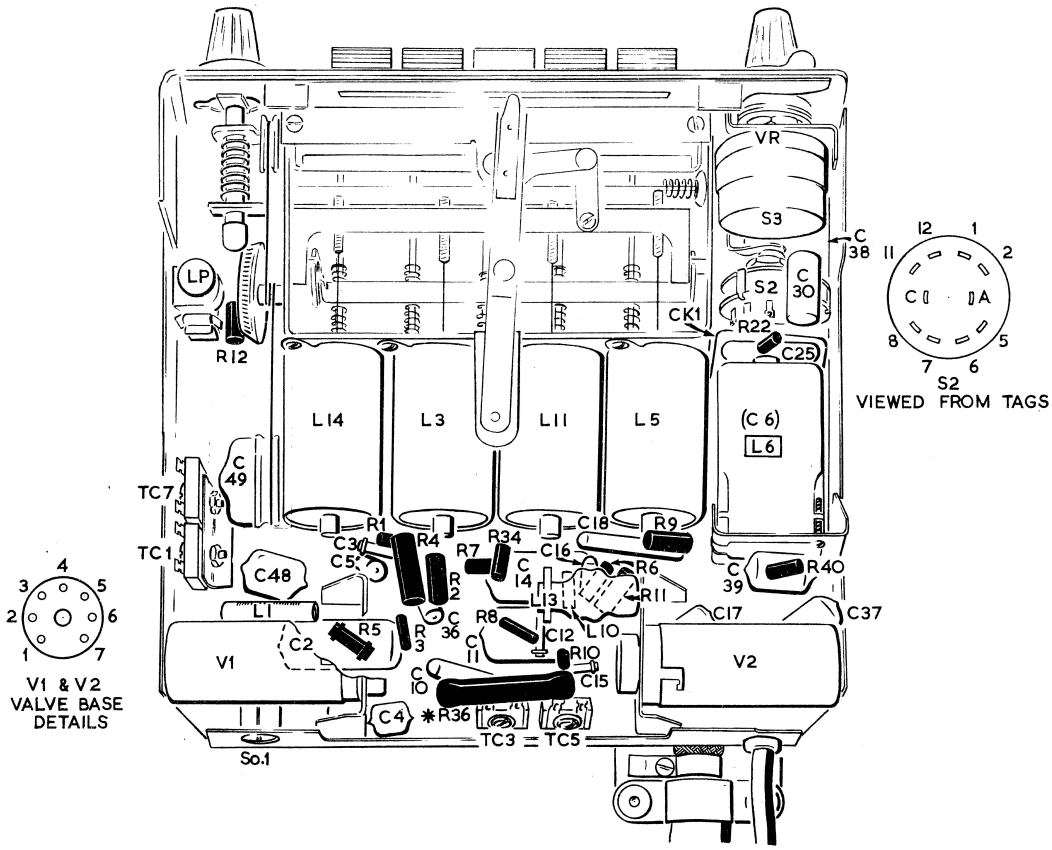

GENERAL CHASSIS VIEW

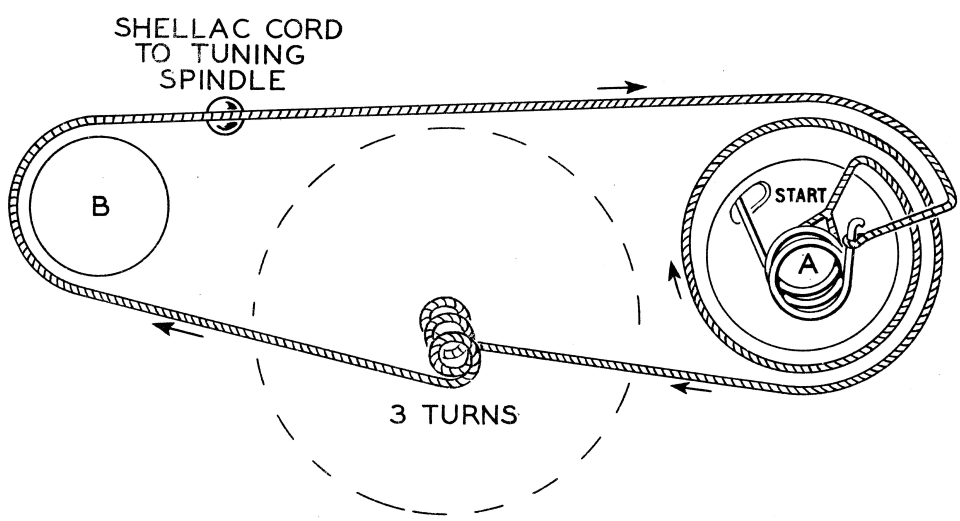

CORD DRIVE