KRIESLER
AUSTRALASIA PTY. LIMITED

TECHNICAL ADVISORY SERVICE
SERVICE SHEET NO. 112

BOX 107 P.O. CARINGBAH N.S.W. 524-0444

PLEASE CIRCULATE TO YOUR SERVICE DEPARTMENT

41-57 SERVICE DATA

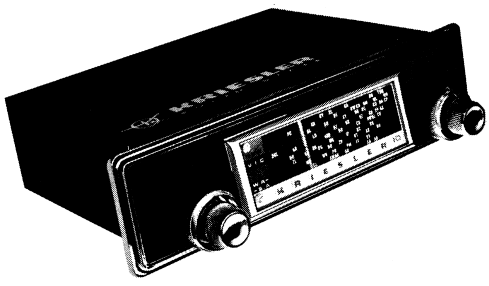

MODEL 41-57

DESCRIPTION: Model 41-57 is a ten transistor, single-unit car radio. The final stage employs two Germanium transistors, with Silicon transistors in all previous stages.

TONE CONTROL: Movement from the fully clockwise to the mid-position results in increasing bottom cut. From the mid-position to fully anticlockwise provides increasing bottom and top cut.

Frequency Range: 520 to 1620 KHz.
Intermediate Frequency: 455 KHz.

SUPPLY VOLTAGE: 12 volts D.C. only, of either polarity. The external polarity plug should be inserted so that the notch on its perimeter lines up with the "+" sign on the case for supply from a positive-ground car battery; and with the notch lined up with the "–" sign for supply from a negative ground car battery.

CONSUMPTION: 230mA. at 12 volts (no signal condition).

Speaker: 15 ohms impedance at 400 c.p.s. Size and type dependent on installation requirements; universal installation kit speaker is 7" x 5" M.S.P. type 750A/15.

POWER OUTPUT: 4 watts at 400 c.p.s. (14 volts supply).

DIMENSIONS: Width 7", height 2", depth 5¾".

WEIGHT: 4 lb.

HIGH CAPACITY AERIAL SYSTEM: Inability to peak the aerial trimmer after installation could indicate that the aerial feeder capacitance is excessively high. To overcome this –

1. Remove the 27pF aerial shunt capacitance C2; or
2. Reduce the feeder cable length; or
3. Insert a series capacitor in the aerial circuit; however, this will reduce the signal input to the receiver.

Note: The aerial trimmer should be finally peaked on a weak transmission around 1500 KHz with the receiver installed in the car and the aerial fully extended.

DIAL SCALE: One dial scale is fitted, marked with the callsign letters of all stations within an 80 mile radius of, and including, all Australian capital cities.
To replace dial scale, remove the screw at each end of the dial lens. Utilising screwhole, pull left hand end towards you to clear lens aperture. Move lens bodily to the left so that the captive righthand end is clear of the lens aperture. Insert alternative lens in reverse sequence of the foregoing. Note that when inserting, if the lens is accurately lined up with the lens aperture, the lefthand end of the lens will 'click' into position when it is pressed against the mounting-screw hole.

ALIGNMENT PROCEDURE

Sig. Generator connected to	Sig. Generator Frequency	Align for Max. Output	Remarks
Converter base through 0.1 uF	455 KHz	IFT 3 IFT 2 IFT 1B IFT 1A	Tuner core carriage fully out
REPEAT UNTIL MAXIMUM OUTPUT IS OBTAINED			
Aerial socket through dummy aerial	1620 KHz	Osc. Trimmer C17	Tuner core carriage fully out
Aerial socket through dummy aerial	1500 KHz	R.F. Trimmer C5 Aerial Trimmer C1	Dial pointer at 1500 KHz approx.
Aerial socket through dummy aerial	600 KHz	Padder Coil L3	Dial pointer at 600 KHz approx. Rock tuner
REPEAT UNTIL CORRECT ALIGNMENT IS OBTAINED, AND DIAL POINTER (RE-SET AS NECESSARY) ACCURACY IS WITH LETTERING LIMITS			

SERVICE ACCESS TO COMPONENTS:

COVER: Remove 8 S.T. screws.

PRINTED WIRING BOARD: Remove 3 S.T. screws from foil side of board. When screwing board back, ensure that the shielded leads are not caught under I.F. transformer cans or other tall components.

PERMEABILITY TUNER: Remove 4 S.T. screws securing front of tuner to chassis and lift vertically after disconnecting leads, light guide and manual drive.

VOLUME CONTROL ASSEMBLY: The chassis has a slotted hole which enables easy withdrawal of this component.

LIGHT GUIDE: Lift upwards to disengage from dial lamp bracket and withdraw from front of chassis. When replacing, ensure that the guide projects ⅝" from the dial back plate and that the other end does NOT touch the dial lamp.

DRIVER TRANSFORMER: Remove printed wiring board and remove 2 S.T. screws securing the transformer assembly to the chassis.

OUTPUT TRANSFORMER: As for Driver Transformer but note that a slightly different mounting bracket is used.

POWER TRANSISTOR REPLACEMENT: Should the power transistors TR11 or TR12 require replacing, always use a matched pair and adjust the standing collector current at the output transformer centre tap to 80mA (no signal condition) by connecting an appropriate value of resistance (R40) in the bias circuit.

MODEL 41-57

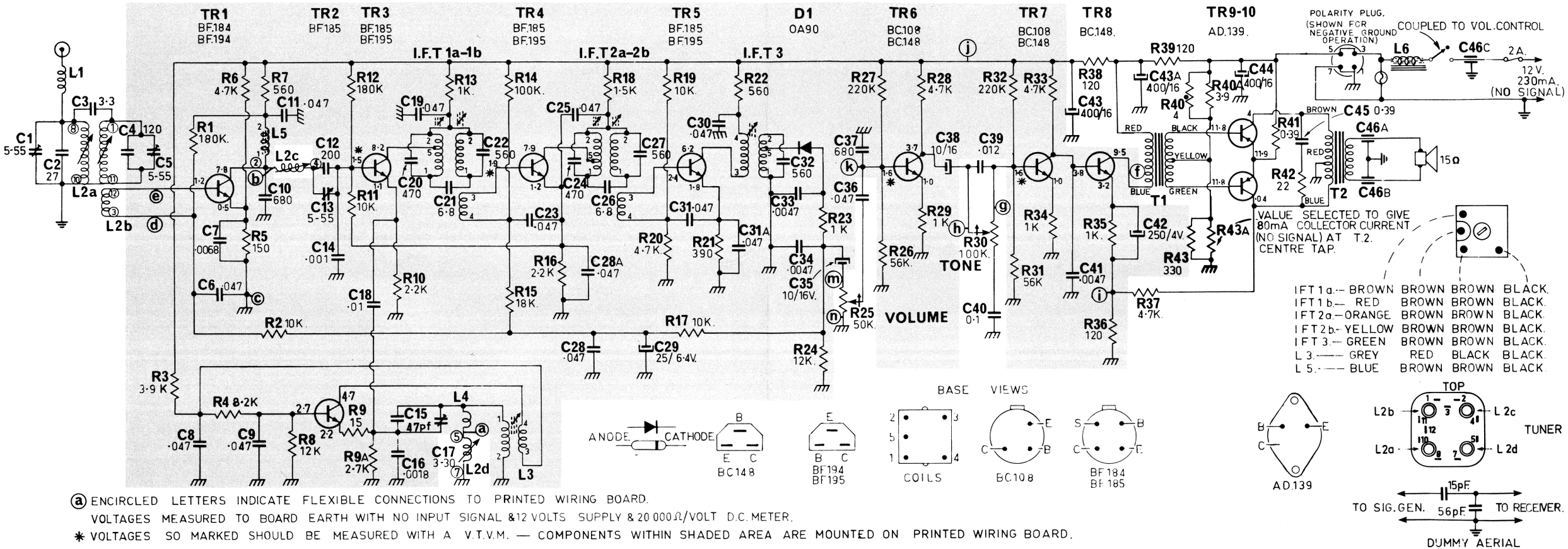

ⓐ ENCIRCLED LETTERS INDICATE FLEXIBLE CONNECTIONS TO PRINTED WIRING BOARD.
VOLTAGES MEASURED TO BOARD EARTH WITH NO INPUT SIGNAL & 12 VOLTS SUPPLY & 20 000Ω/VOLT D.C. METER.
✱ VOLTAGES SO MARKED SHOULD BE MEASURED WITH A V.T.V.M. — COMPONENTS WITHIN SHADED AREA ARE MOUNTED ON PRINTED WIRING BOARD.

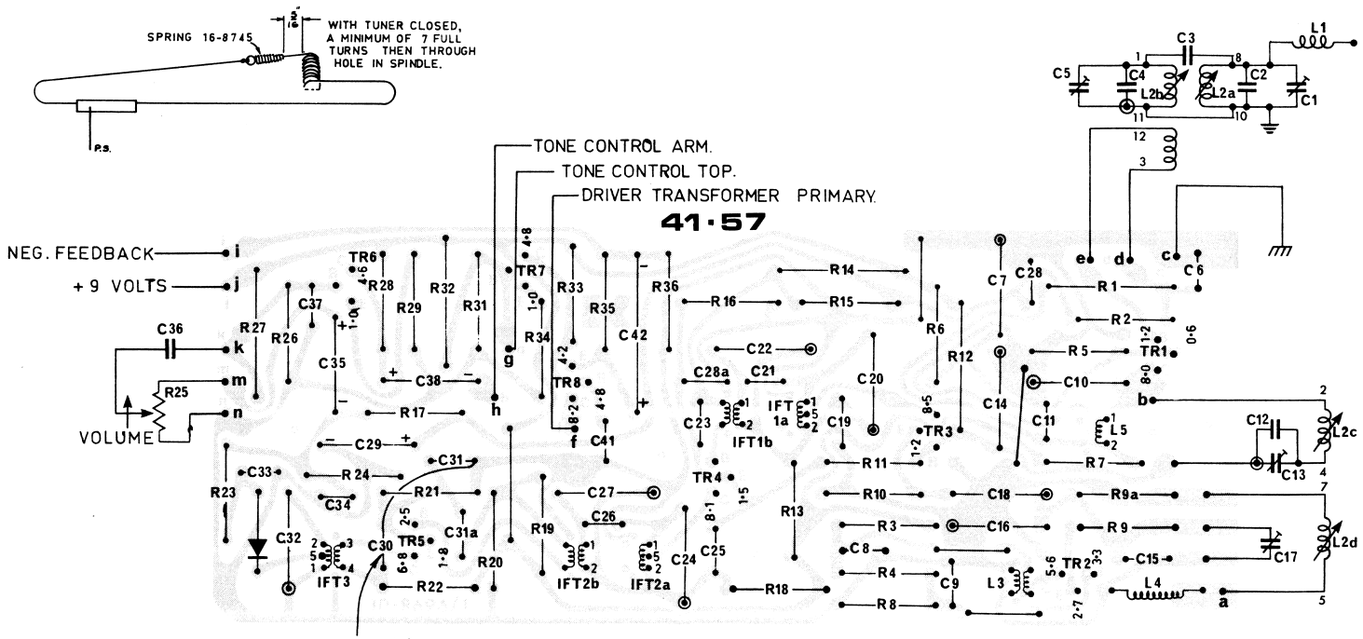

Parts List Resistors:—
All ½W ± 10% Except as follows:-
½W. ± 5%; R38.
1W, ± 5%; R1, R12 1W, ± 10%; R14, R27, R32, R40.
½W. WW ± 10%; R41.
Vol-Tone/Off-on SW. (R25, R30); Part No. 32-8701.
Capacitors:—
Electrolytics, as on circuit in capacity value/voltage rating.
Styro Seal, 630V ± 2½%; C20, C22, C24, C27, C32.
Styro Seal, 630V ± 5%; C4, C12.
Styro Seal, 630V ± 10%; C10, C14.
Styro Seal, 400V ± 10%; C16.
Styro Seal, 50V ± 10%; C7, C18;

Disc Ceramic (Red Cap) 25V Style "F" ± 20%; C33, C34, C41.
Disc Ceramic (Red Cap) 25V Style "B" — 20+80%; C6, C8, C9. C11, C19, C23, C25, C28, C28A, C30, C31, C31A.
Ceramic, NPO "F" ± ¼%; C3.
Ceramic, NPO "A" ± ¼%; C21, C26.
Ceramic, CDS "C" ± 10%; C2.
Ceramic, CDS "C" ± 5%; C15.
Ceramic, CDS "AY" ± 20%; C37.

MSP 35130; C1.
Transformer, Driver; T1, Part No. 5518
Transformer, Output; T2, Part No. 18-5519
Tuner, Part No. MSP 90-8750.
Filter Choke; L6 Part No. 4048-025-02.
R.F. Choke, 47 μH; L1, Part No. I.R.C. Type CLA.

Polyester, 160V ± 10%; C36, C39, C40, C45.
Triple Button Feed through, 3 x 1000PF; C46A, C46B, C46C.
Trimmers:—
Ducon CW NPO (Wire); C17.
Ducon CWA/O; C5, C13.

MECHANICAL PARTS LIST

Part No.	ITEM
16-8684	Trimmer bracket
90-8670	Dial pointer and carrier assembly
16-8751	Dial Light bracket
20-8734	Dial Light guide
BA95-10PC5	Dial Light, 16V 0.2A
16-8741	Dial Backing
16-5525	Lead washer, transistor
46-8739	Cover Assembly
90-8789	Dial escutcheon
69-8731	Dial Scale
26-8721	Dial Scale screw
20-8667	Tuning knob, front (volume)
20-8694	Tone Control knob
20-6195	Trimmer knob, aerial
90-7655	Polarity plug assembly
MSP 36546	Fuse Holder, MSP
90-8715	Aerial Lead Assembly

L5	CZ-651-016	1FT1a	CZ-651-011
1FT1b	CZ-651-012	1FT2a	CZ-651-013
1FT2b	CZ-651-014	1FT3	CZ-651-015
		L4	14-7068

L3 CZ-652-014 (Yellow Red Brown Black) for Board, Part No. 10-8696/1.
L3 CZ-652-008 (Grey Red Black Black) for Board, Part No. 10-8696/2.
If replacing L3 in either Board, change C15 to 68pF ± 5% Styroseal type DFB0668.

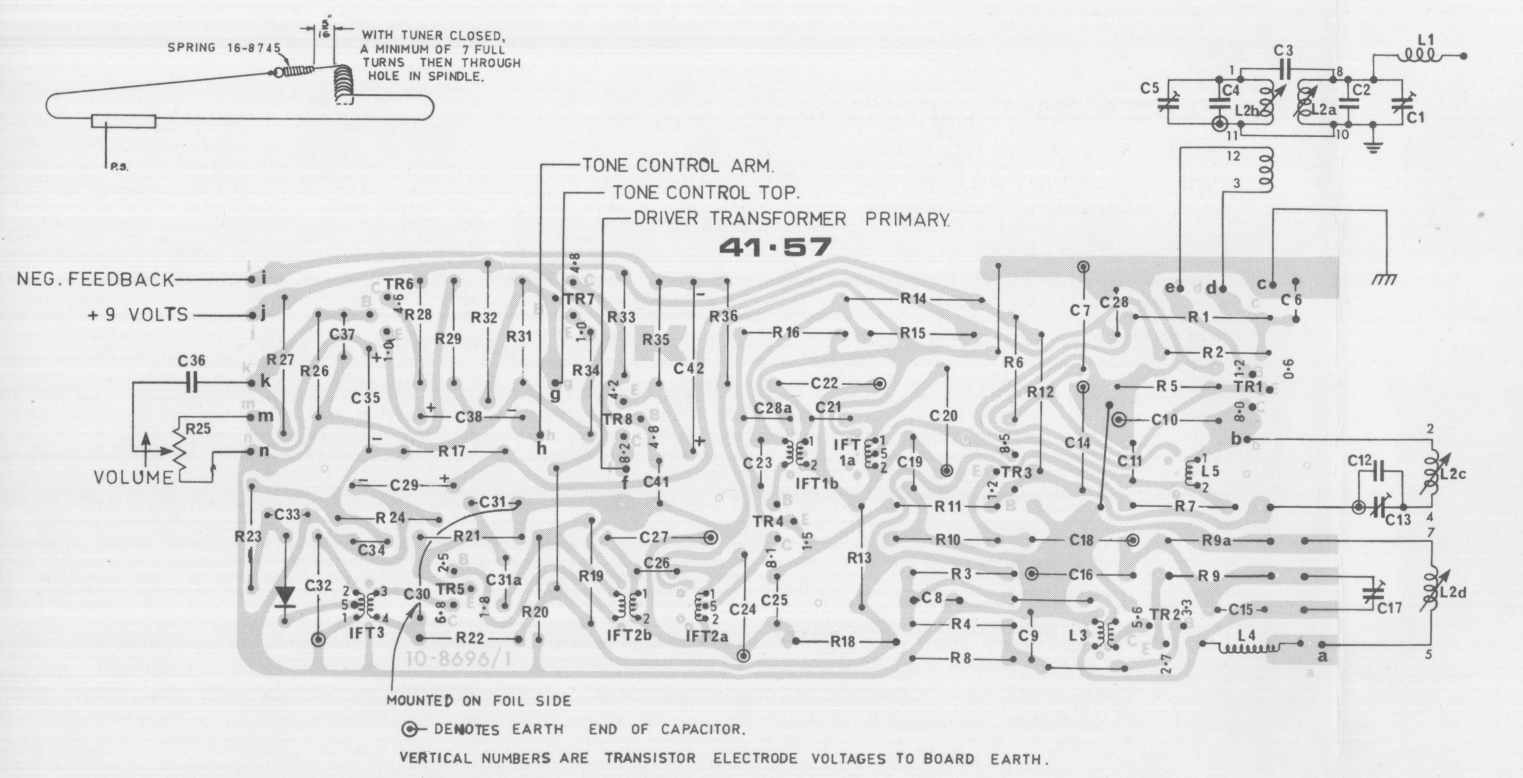
SPRING 16-8745
WITH TUNER CLOSED, A MINIMUM OF 7 FULL TURNS THEN THROUGH HOLE IN SPINDLE.
P.S.
TONE CONTROL ARM.
TONE CONTROL TOP.
DRIVER TRANSFORMER PRIMARY.
41·57
NEG. FEEDBACK
+ 9 VOLTS
VOLUME
MOUNTED ON FOIL SIDE
DENOTES EARTH END OF CAPACITOR.
VERTICAL NUMBERS ARE TRANSISTOR ELECTRODE VOLTAGES TO BOARD EARTH.
10-8696/1