TECHNICAL SERVICE INFORMATION

ISSUED BY

KRIESLER AUSTRALASIA PTY. LIMITED

12-30 Cawarra Road, Caringbah. P.O. Box 107, Caringbah. Telephone 5-2044

DESCRIPTION

Model 41-47 is a 6 transistor portable receiver designed for broadcast band reception from 525 to 1635 Kc/s. It is housed in a moulded plastic cabinet and is fitted with a nylon woven wrist carrying strap.

A socket is provided for the connection of an earpiece.

AERIAL

The receiver is fitted with an inbuilt ferrite-rod aerial.

EARPIECE

A dynamic earpiece of 7 to 15 ohms impedance may be plugged into the socket between the two control knobs.

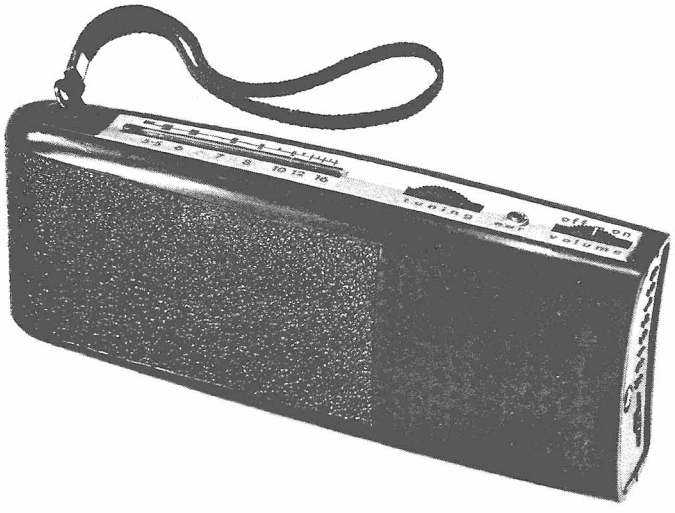

41-47

BATTERIES

Three 1.5 volt, size "AA" cells, Eveready 1015, or equivalent Manganese Alkaline cells may be used for longer life. For battery access, remove the screw securing the back with a screwdriver and then hinge open the back.

CHASSIS ACCESS AND REMOVAL

For access undo cabinet back (see above). Remove the batteries, remove two self-tapping screws located on the ends of the battery compartment. The chassis may now be removed by pulling up the chassis serial number card; this will remove the chassis at the correct angle from the cabinet. The chassis can now be moved to the extent of the speaker leads.

CHASSIS REFITTING

Reverse the above procedure.

NOTE: First locate the engaging pin on the dial scale assembly into the appropriate hole in the cabinet.

DIMENSIONS

Length $7^1/_8$", Width $2^1/_8$", Depth $1^3/_8$".

WEIGHT

12 ozs.

REPLACEMENT PARTS

Cabinet —	20-6246
Wrist Strap —	90-6264
Tuning Knob —	20-6250
Volume Knob —	20-6251
Escutcheon —	69-6265
Pointer —	16-6239
Dial Lens —	20-6249

Back Screw—self tapper 6 x $^3/_8$ Type A raised head, countersunk, nickel plated.

Speednut—Carr Fastener, SNU-1219-17-9

COMPONENT LAYOUT 41-47

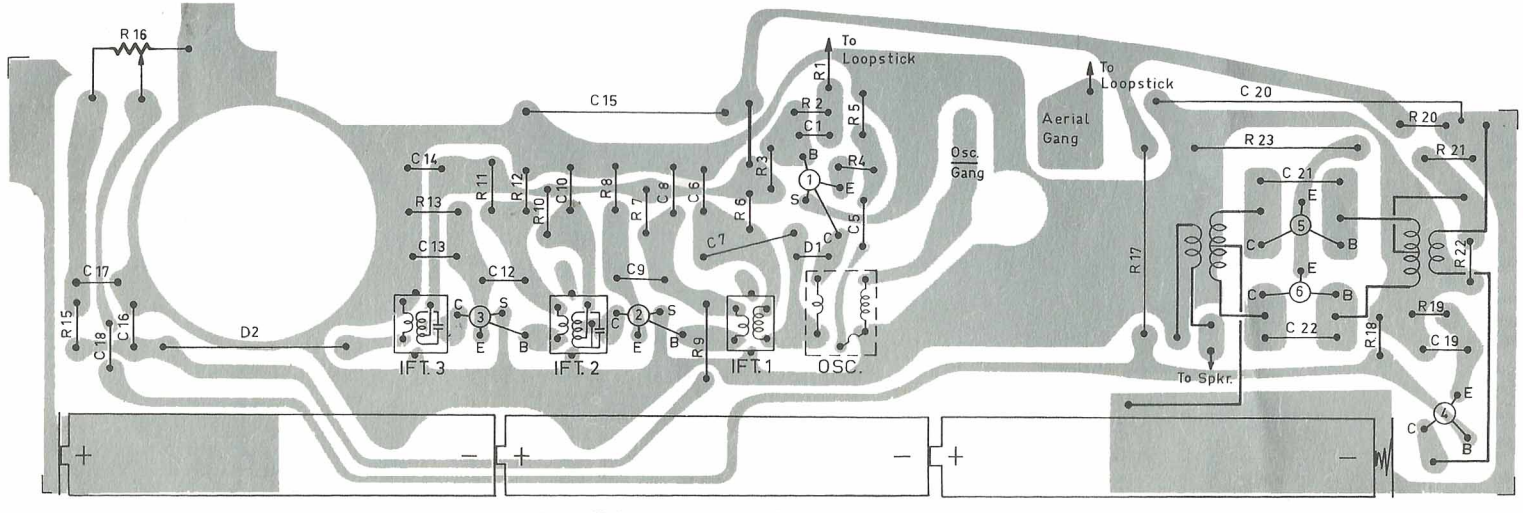

VIEW FROM PRINTED WIRING SIDE OF BOARD

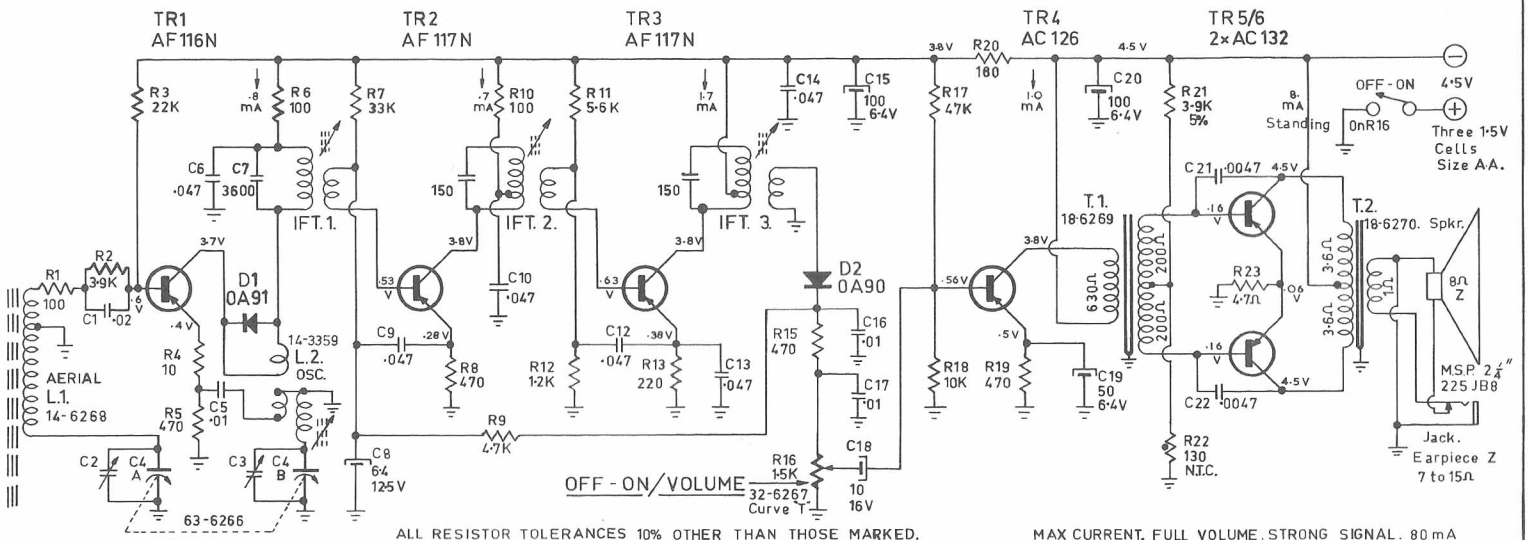

ALL RESISTOR TOLERANCES 10% OTHER THAN THOSE MARKED.

ALL VOLTAGES ARE NEGATIVE IN RESPECT TO BOARD EARTH AND ARE MEASURED WITH A 20000 OHM/VOLT D.C. METER.

D.C. RESISTANCES SHOWN ON INDUCTANCES.

MAX CURRENT. FULL VOLUME. STRONG SIGNAL. 80 mA

MIN CURRENT. MIN VOLUME. NO SIGNAL 16 mA

ALIGNMENT PROCEDURE.

STEP	SIGNAL GEN. FREQUENCY	CONNECT SIGNAL GENERATOR TO —	WITH TUNING GANG —	PROCEED AS FOLLOWS
1.	455 Kc/s	Base of TR 1	Closed	Peak core of IFT 3
2.	455 Kc/s	Important Connect generator earth to emitter of TR 1	Closed	Peak core of IFT 2
3.	455 Kc/s		Closed	Peak core of IFT 1
4.	——		——	Repeat until no further gain is obtainable.
5.	455 Kc/s	Radiate into Aerial	Closed	Check alignment of IFT 1.
6.	525 Kc/s	Radiate into Aerial	Closed	Adjust oscillator coil until signal is heard.
7.	1635 Kc/s	Radiate into Aerial	Open	Tune oscillator trimmer until signal is heard.
8.	600 Kc/s	Radiate into Aerial	at 600 Kc/s	Peak aerial coil.
9.	1500 Kc/s	Radiate into Aerial	at 1500 Kc/s	Peak aerial tmr.
10.	——	——	——	Using weak station signal, calibrate low end of scale at oscillator coil.
11.	——	——	——	Using weak station signal, calibrate high end of scale at oscillator trimmer.
12.	——	——	——	Repeat 8 and 9 until no further gain is obtainable.

NOTE: Inject 455 Kc/s signal to base of TR 1 via a 0.22 uF capacitor.

I.F.T. COLOUR CODE

IFT	A	B	C	D
1 —	BROWN	YELLOW	BLACK	BLACK
	or		BROWN	VIOLET
2 —	BROWN	ORANGE	BLACK	BLACK
	or		GREY	BLUE
3 —	BROWN	GREEN	BLACK	BLACK
	or		BLACK	VIOLET

6 TRANSISTOR B/C PORTABLE	41-47			DATE
		DRAWN	J. Blomire	21-5-65
		CHECKED		29-5-65
		APPROVED		29-6-65