TECHNICAL SERVICE INFORMATION

ISSUED BY

KRIESLER AUSTRALASIA PTY. LIMITED

12-30 Cawarra Road, Caringbah. P.O. Box 107, Caringbah. Telephone 5-2044

DESCRIPTION.

Model 41-45 is an 8 transistor portable receiver designed for Broadcast Band reception from 525 to 1635 Kc/s. It is housed in a moulded plastic cabinet and is fitted with an adjustable carrying strap. Sockets are provided for the connection of an extension or car radio aerial and an earpiece.

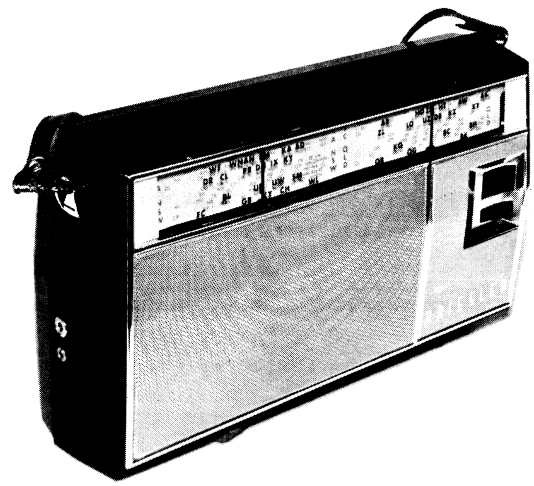

AERIAL.

Inbuilt ferrite-rod. An external aerial may be connected to the large socket on the left-hand end of the cabinet using a Kriesler 90-4867 plug.

CAR AERIAL.

For car radio operation, the Kriesler whip aerial type 90-4866 is recommended. It is already fitted with the correct plug and its capacitance does not exceed the allowable limit of 150 pF.

EARPIECE.

A dynamic earpiece of 7 to 15 ohms impedance may be plugged into the smaller of the two sockets on the left-hand end of the cabinet.

BATTERIES.

Four 1.5V 'c' cells, Eveready 1035, or equivalent Manganese Alkaline cells may be used for longer life. For battery access, remove the centre screw and cabinet back by twisting a coin in the slot on the base of the cabinet.

CHASSIS ACCESS AND REMOVAL.

For access, remove the cabinet back (see above). For complete removal, remove the three self-tapping screws securing the metal chassis to the cabinet front. The chassis may now be lifted out to the limit of the speaker and battery leads.

DIMENSIONS.

Length 9″, Height $5\frac{1}{8}$″, Depth $2\frac{3}{8}$″.

WEIGHT.

2 lbs. $5\frac{1}{2}$″ oz. including batteries.

ALIGNMENT PROCEDURE.

STEP	SIGNAL GEN. FREQUENCY	CONNECT SIGNAL GENERATOR TO —	WITH TUNING GANG —	PROCEED AS FOLLOWS
1.	455 Kc/s	Base of TR 1	Closed	Peak core of IFT 3
2.	455 Kc/s	Base of TR 1	Closed	Peak core of IFT 2
3.	455 Kc/s	Base of TR 1	Closed	Peak core of IFT 1
4.	———	———	———	Repeat until no further gain is obtainable.
5.	455 Kc/s	Radiate into Aerial	Closed	Check alignment of IFT 1.
6.	525 Kc/s	Radiate into Aerial	Closed	Adjust oscillator coil until signal is heard.
7.	1635 Kc/s	Radiate into Aerial	Open	Tune oscillator trimmer until signal is heard.
8.	600 Kc/s	Radiate into Aerial	at 600 Kc/s	Peak aerial coil.
9.	1500 Kc/s	Radiate into Aerial	at 1500 Kc/s	Peak aerial tmr.
10.	———	———	———	Using weak station signal, calibrate low end of scale at oscillator coil.
11.	———	———	———	Using weak station signal, calibrate high end of scale at oscillator trimmer.
12.	———	———	———	Repeat 8 and 9 until no further gain is obtainable.

NOTE: Inject 455 Kc/s signal to base of TR 1 via a 0.22 uF capacitor.

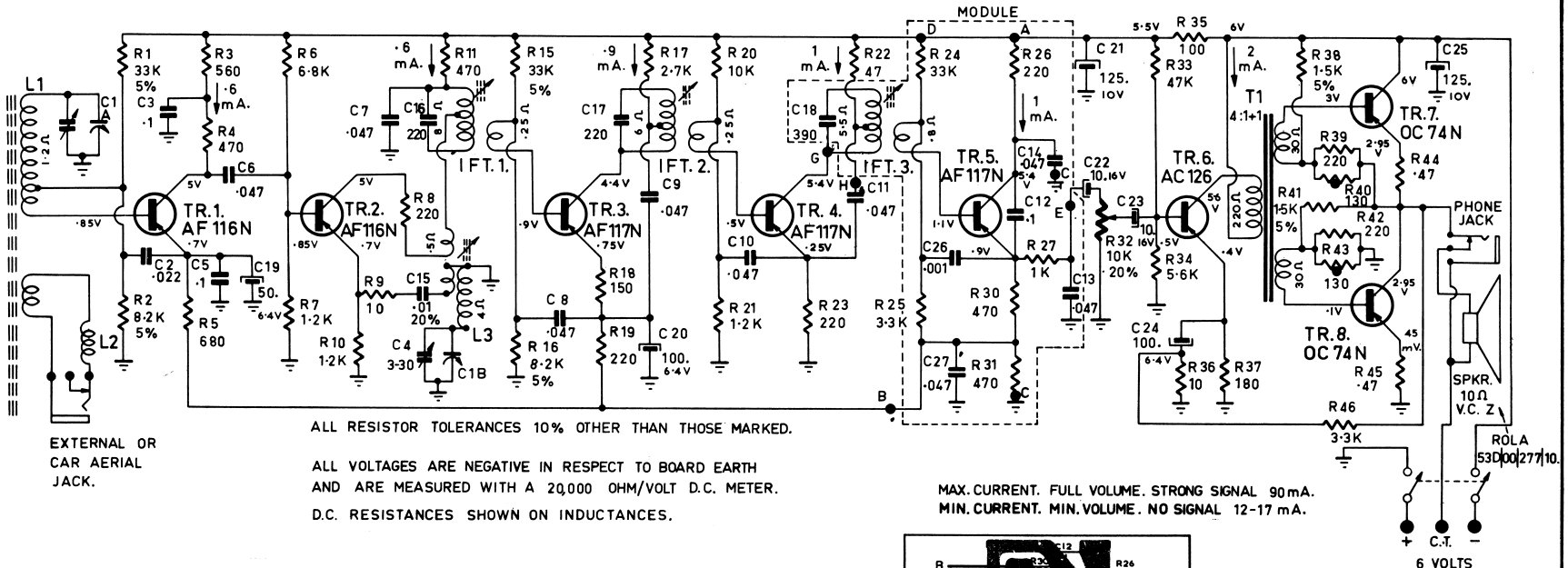

ALL RESISTOR TOLERANCES 10% OTHER THAN THOSE MARKED.

ALL VOLTAGES ARE NEGATIVE IN RESPECT TO BOARD EARTH AND ARE MEASURED WITH A 20,000 OHM/VOLT D.C. METER.

D.C. RESISTANCES SHOWN ON INDUCTANCES.

MAX. CURRENT. FULL VOLUME. STRONG SIGNAL 90 mA.
MIN. CURRENT. MIN. VOLUME. NO SIGNAL 12-17 mA.

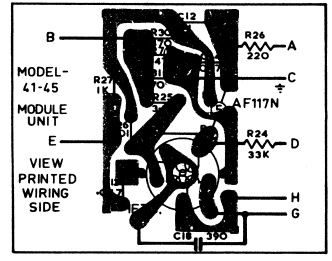

CHASSIS No. 89-24.

ELECTRICAL PARTS LIST. MODEL No. 41-45 CHASSIS No. 89-24.

R1	33K	½W	BTS	5%	I.R.C.	R26	220Ω	½W	BTS	10%	I.R.C.
R2	8.2K	"	"	"	"	R27	1K	"	"	"	"
R3	560Ω	"	"	10%	"	R30	470Ω	"	"	"	"
R4	470Ω	"	"	"	"	R31	470Ω	"	"	"	"
R5	680Ω	"	"	"	"	R32	10K Pot. 32-5705. Kriesler				
R6	6.8K	"	"	"	"	R33	47K	½W	BTS	10%	I.R.C.
R7	1.2K	"	"	"	"	R34	5.6K	"	"	"	"
R8	220Ω	"	"	"	"	R35	100Ω	"	"	"	"
R9	10Ω	"	"	"	"	R36	10Ω	"	"	"	"
R10	1.2K	"	"	"	"	R37	180Ω	"	"	"	"
R11	470Ω	"	"	"	"	R38	1.5K	"	"	5%	"
R15	33K	"	"	5%	"	R39	220Ω	"	"	10%	"
R16	8.2K	"	"	"	"	R40	130Ω Thermistor A/T Ducon				
R17	2.7K	"	"	10%	"	R41	1.5K	½W	BTS	5%	I.R.C.
R18	150Ω	"	"	"	"	R42	220Ω	"	"	10%	"
R19	220Ω	"	"	"	"	R43	130Ω Thermistor A/T Ducon				
R20	10K	"	"	"	"	R44	.47Ω	"	BW½	10%	I.R.C.
R21	1.2K	"	"	"	"	R45	.47Ω	"	"	"	"
R22	47Ω	"	"	"	"	R46	3.3K	"	BTS	"	"
R23	220Ω	"	"	"	"						
R24	33K	"	"	"	"	C1	Gang. 63-3899. M.S.P.				
R25	3.3K	"	"	"	"	C2	.022uF 25V Ceramic				

C3,12	.1uF	25V Ceramic.	
C4	3-30pF	Wire trimmer.	
C5	.1uF	25V Ceramic.	
C6-14	.047uF	25V Ceramic.	
C15	.01uF	25V Ceramic.	
C16-7	220pF	125V Styroseal.	
C18	390pF	"	"
C19	50uF	6.4V	Electro.
C20	100uF	6.4V	"
C21	125uF	10V	"
C22-3	10uF	16V	"
C24	100uF	6.4V	"
C25	125uF	10V	"
C26	.001uF	200V Styroseal.	
C27	.047uF	25V Ceramic.	
L1	Loopstick.		14-5572
L2	Choke.		34-4657
L3	Osc. Coil.		14-4660
IFT1	I.F. Trans.		24-2153
IFT2	I.F. Trans.		24-2154
IFT3	I.F. Trans.		24-5594
T1	Driver Trans.		18-5593

I	ORIGINAL										
ISSUE	CHANGE				7-8-64				DATE	S'GN'D	
MATERIAL		DRAWN	A. Sheather 27.7.64	PROJECT	QTY.	PROJECT	QTY.	PROJECT	QTY.		
GAUGE		CHECKED	L. Reed 7-7-64								
FINISH		APPROV. MECH.									
Prescription No.		ELEC.	O. Lim 7-9-64								
		STYLING									

8 - TRANSISTOR B/C PORTABLE 41-45

Work to Dimensions only. Unless otherwise specified, Tolerances to be read as:— ± 1/64" on Fractions. ± .005" on Decimals.

Before production is commenced 2 samples must be submitted to Drawing Office for approval.

This Drawing must be returned to KRIESLER AUSTRALASIA PTY. LTD. 12-20 CAWARRA RD., CARINGBAH

SCALE

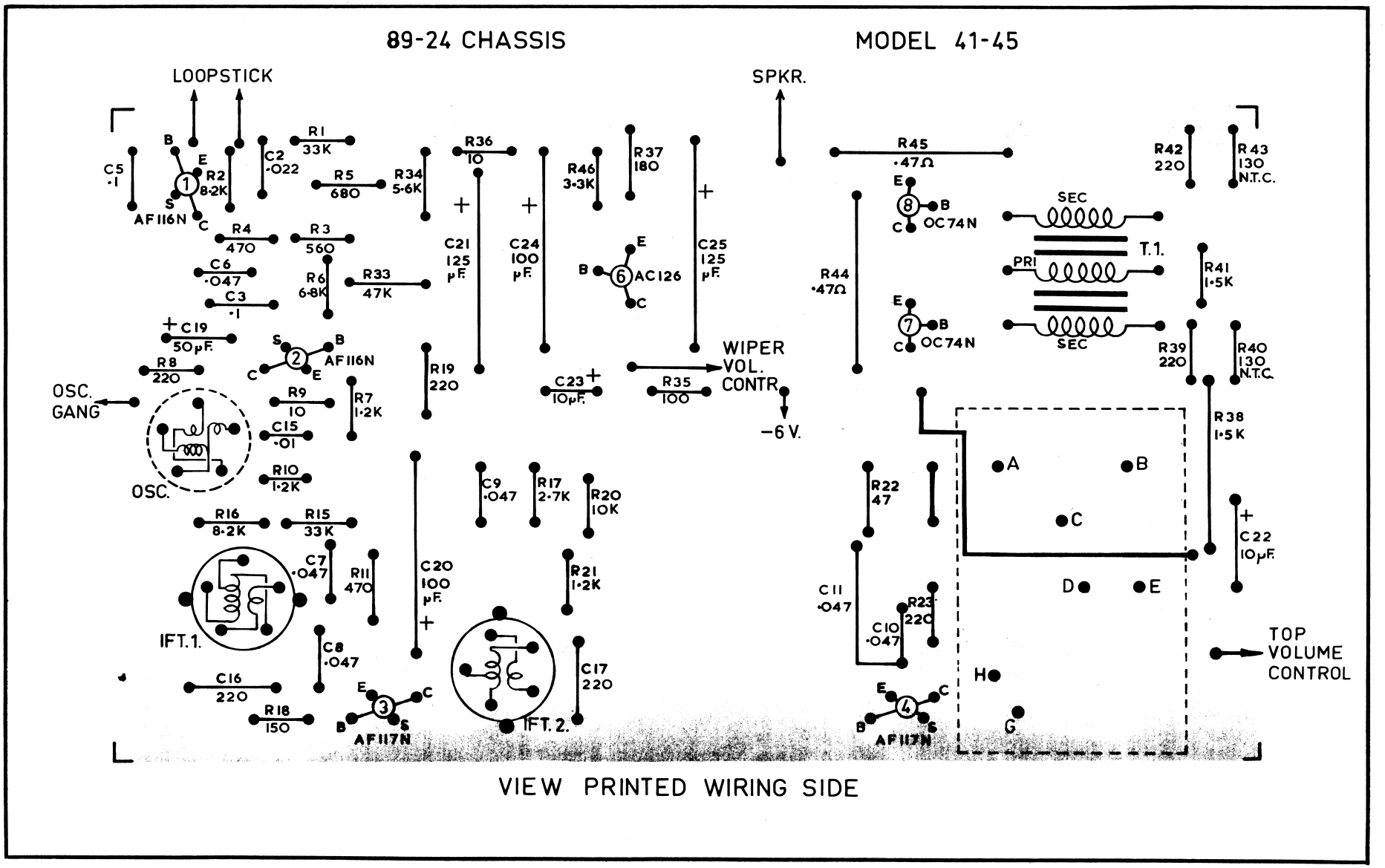
89-24 CHASSIS
MODEL 41-45
LOOPSTICK
SPKR.
C5 ·1
B E S C
AF116N
R2 8·2K
C2 ·022
R1 33K
R5 680
R34 5·6K
R36 10
R46 3·3K
R37 180
R45 ·47Ω
R42 220
R43 130 N.T.C.
E B C
OC74N
SEC
PRI
T.1.
R41 1·5K
R4 470
R3 560
C6 ·047
R6 6·8K
R33 47K
C3 ·1
C21 125 pF.
C24 100 pF.
E B C
AC126
C25 125 pF.
R44 ·47Ω
C19 50pF.
S B C E
AF116N
R8 220
OSC. GANG
R9 10
R7 1·2K
R19 220
C23 10pF.
R35 100
WIPER VOL. CONTR.
−6 V.
R39 220
R40 130 N.T.C.
R38 1·5K
C15 ·01
OSC.
R10 1·2K
C9 ·047
R17 2·7K
R20 10K
R22 47
A B C D E
C22 10pF.
R16 8·2K
R15 33K
C7 ·047
R11 470
C20 100 pF.
R21 1·2K
C11 ·047
R23 220
C10 ·047
IFT.1.
C8 ·047
C16 220
R18 150
E C B S
AF117N
IFT.2.
C17 220
H G
TOP VOLUME CONTROL
VIEW PRINTED WIRING SIDE

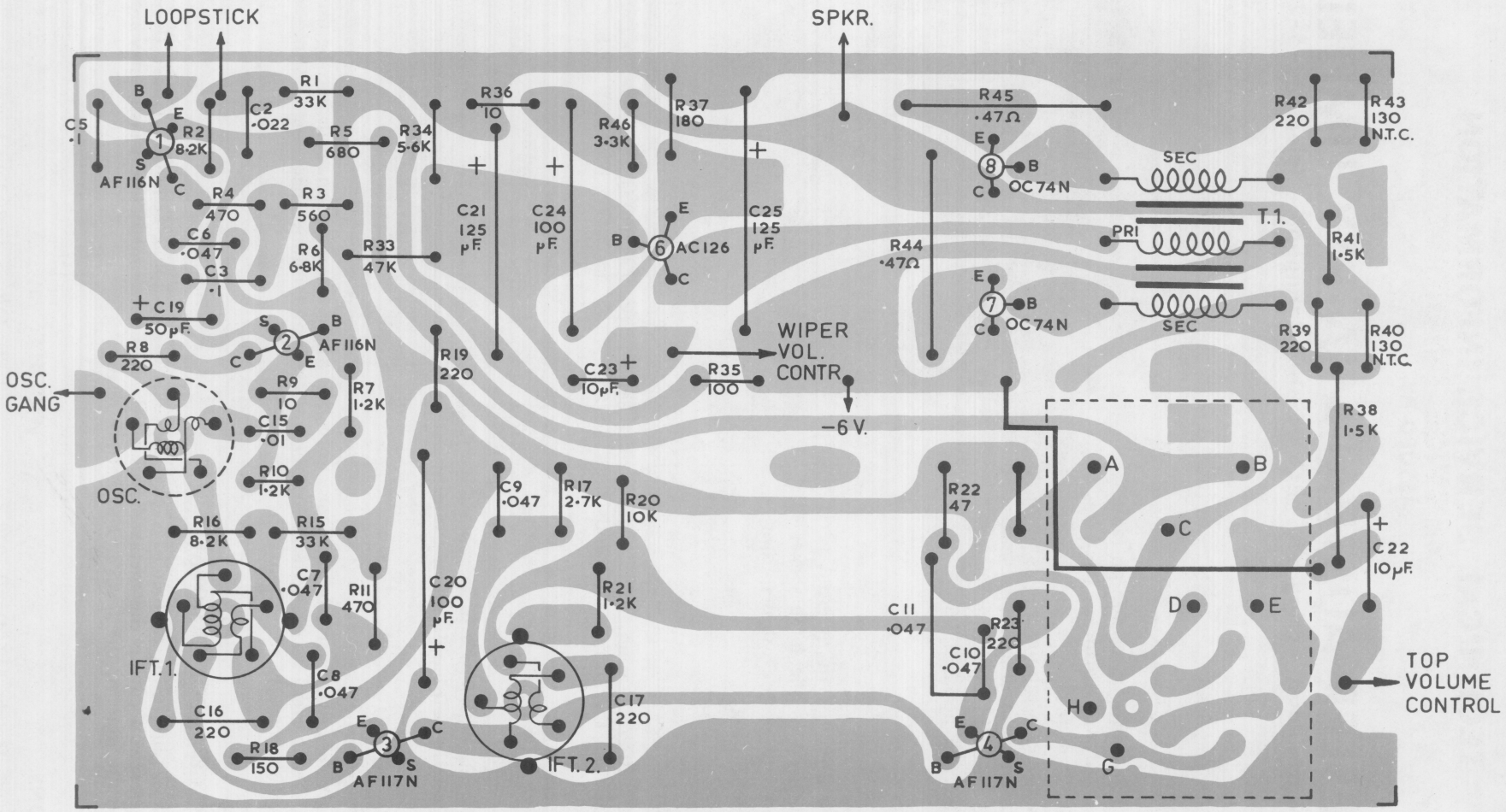

VIEW PRINTED WIRING SIDE