TECHNICAL SERVICE INSTRUCTIONS

ISSUED BY

KRIESLER AUSTRALASIA LTD.

41-3 RECEIVER DRY BATTERY TABLE MODEL

INSTALLATION INSTRUCTIONS: As recommended in booklet issued with receiver.

SOURCE OF POWER: "B" Supply ..... 90 volts D.C.
"A" Supply ..... 1.5 volts D.C.
Dial light supply ..... 4.5 volts D.C.

FREQUENCY RANGES: Broadcast Band—540 K.C. to 1650 K.C.
Shortwave Band—6 M.C. to 18 M.C.

The Frequency ranges indicated above are common to every 41-3 receiver, unless information to the contrary is given on the relevant instruction sheet.

CONTROLS: (Left to Right)—TONE (Normal, S/W & Speech, High Fidelity) VOLUME (and on/off switch), DIAL LIGHT SWITCH, TUNING, BAND SELECTOR (Short-wave Broadcast).

CABINET: Standard bakelite type comprising 1-Top Part No. 20-28, 1-Base Part No. 20-30.

IMPORTANT: When making enquiries about any particular receiver, please quote full model number and serial number, e.g., Model 41-3A, Serial No. 1625.

RELEASED: October, 1949.

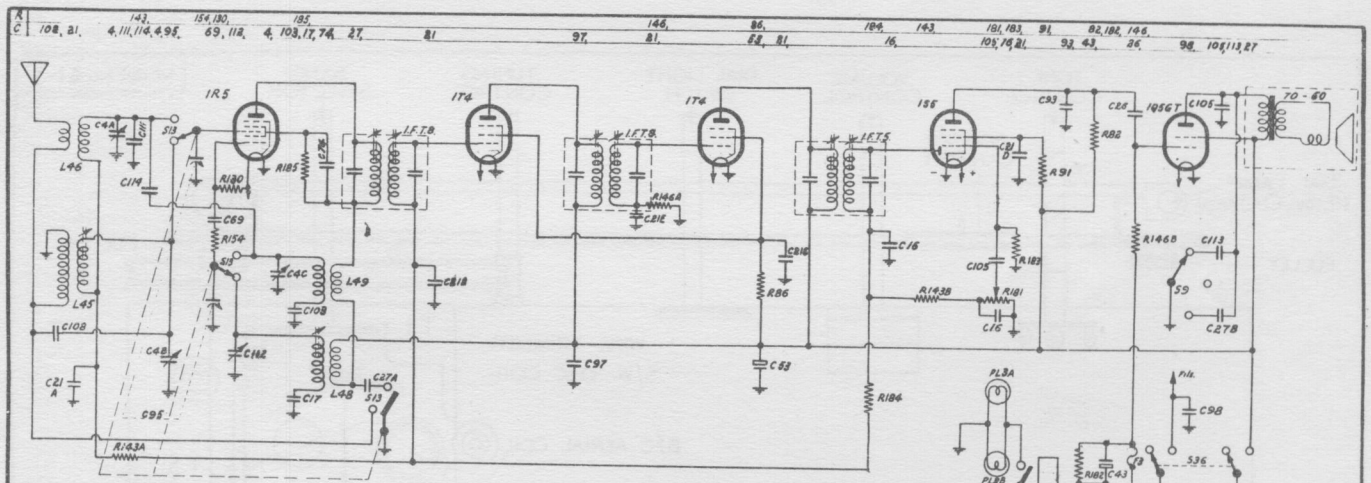

Circuit Designation	Description	Part No.
R82	Resistor, Carbon, 1/2 Meg. Ω, 1 W. ±10%	12-82
R86	Resistor, Carbon, 1/4 Meg. Ω, 1 W. ±10%	12-86
R91	Resistor, Carbon, 3 Meg. Ω, 1 W. ±10%	12-91
R130	Resistor, Carbon, 100,000 Ω, 1/2 W. ±10%	12-130
R143A,B.	Resistor, Carbon, 50,000 Ω, 1/2 W. ±10%	12-25
R146A,B.	Resistor, Carbon, 1 Meg. 1/2 W. ±10%	12-29
R154	Resistor, Carbon, 40 Ω, 1/2 W. ±10%	12-40
R181, S36	Potentiometer, Switch, 1/2 Meg. Ω Double Pole	38-13
R182	Resistor, Wire Wound, 500 Ω, 1 W. ±10%	22-53
R183	Resistor, Carbon, 10 Meg. Ω, 1 W. ±10%	12-47
R184	Resistor, Carbon, 3 Meg. Ω, 1/2 W ±10%	12-66
R185	Resistor, Carbon, 7,000 Ω, 1/2 W ±10%	12-49
C16A,B	Condenser, Mica, 100 pF. P.T. ±15%	13-28
C4A,B,C.	Condenser, Trimmer, 3 to 20 pF.	63-5
C17	Condenser, Mica, 435 pF. S.M. ±2½%	13-39
C26	Condenser, Paper, ·005 mfd. 600V. ±15%	23-13
C27A,B.	Condenser, Paper, ·01 mfd. 600V. ±15%	23-14
C43	Condenser, Elect. 25 mfd. 40V. E.T. -10% +40%	63-6
C78	Condenser, Mica, ·001 mfd. S.M. ±15%	13-45
C69	Condenser, Mica, 50 pF. S.M. ±15%	13-33
C53	Condenser, Elect. 8 mfd. 350V. E.T. -10% +40%	63-7
C21A,B,C,D.	Condenser, Paper, ·05 mfd. 200V. ±15%	23-12
C93	Condenser, Mica, 250 pF. P.T. ±15%	13-38
C95	Condenser, 2 Gang Variable	63-6
C97	Condenser, Paper, 1 mfd. 200V. ±15%	23-18
C98	Condenser, Paper, ·5 mfd. 200V. ±15%	23-19
C103	Condenser, Mica ·003 mfd. S.M. ±10%	13-50
C105	Condenser, ·002 mfd. 600V. ±15%	23-22
C108	Condenser, Mica 3 pF. P.T. ±15%	13-52

Circuit Designation	Description	Part No.
C111	Condenser, Mica, 10 pF P.T. ±15%	13-53
C113	Condenser, Paper, ·03 mfd. 400V. ±15%	23-25
C114	Condenser, Mica, 1·5 pF. P.T. ±15%	13-54
C112	Condenser, Wire Trimmer 3-30 pF	63-9
L45	Coil, B/C Aerial.	14-7
L46	Coil, S/W Aerial.	14-8
L48	Coil, B/C Oscillator	14-10
L49	Coil, S/W Oscillator	14-11
I.F.T.B.	I.F. Transformer 455 K.C.	24-8
I.F.T.9.	I.F. Transformer 455 K.C.	24-9
I.F.T.5.	I.F. Transformer 455 K.C.	24-5
S9	Switch, Tone Control, 3 pos., Single Pole	57-2
S13	Switch, Wave Change, 2 pos., 3 pole.	17-8
S36	Switch, 2 Position, Single Throw.	17-17
T49	Output Transformer, 10,000 Ω to 3·7 Ω	18-50
	Speaker, & Transformer Sub Assy.	70-50
PL3 A/B	Flash Lamp, 4·5V. 300 mill. M.E.S. Base	47-3
F3	Fuse. 4·5V., 300 mill. Flash Lamp.	47-3

Speaker Socket Connections:- Pin No. 1-Earth, Pin No. 3-Plate, Pin No. 5-B+ (Octal Plug).
S9 shown in anticlockwise position, viewed from Spindle end.
S13 shown in clockwise position, (Broadcast), viewed from Spindle end.
S36 shown in anticlockwise position (off), viewed from Spindle end.
S36 actuated by Potentiometer Spindle.

When ordering replacement parts please state the following:-
Receiver Model No. Chassis No. Part No. Circuit Designation. General Description.

Before production is commenced 2 samples must be submitted to Drawing Office for approval.

Work to Dimensions only.
TOLERANCES: Unless otherwise specified. Tolerances to be read as:- ± On Fractions ± on Decimals.

DRAWN	A. Gillilan		USED ON	QTY.	USED ON	QTY.
CODING			41-3	1		
PLANNING						
CHECKED						

SCALE | Prescription No. | 70-50

RECEIVER-1·4v. BATTERY

41-3

ISSUE 1

SHEET No. | No. of Sheets

This Drawing must be returned to KRIESLER AUSTRALASIA LIMITED 43 ALICE ST., NEWTOWN, SYDNEY.

APPROVED | Card No. | File No.

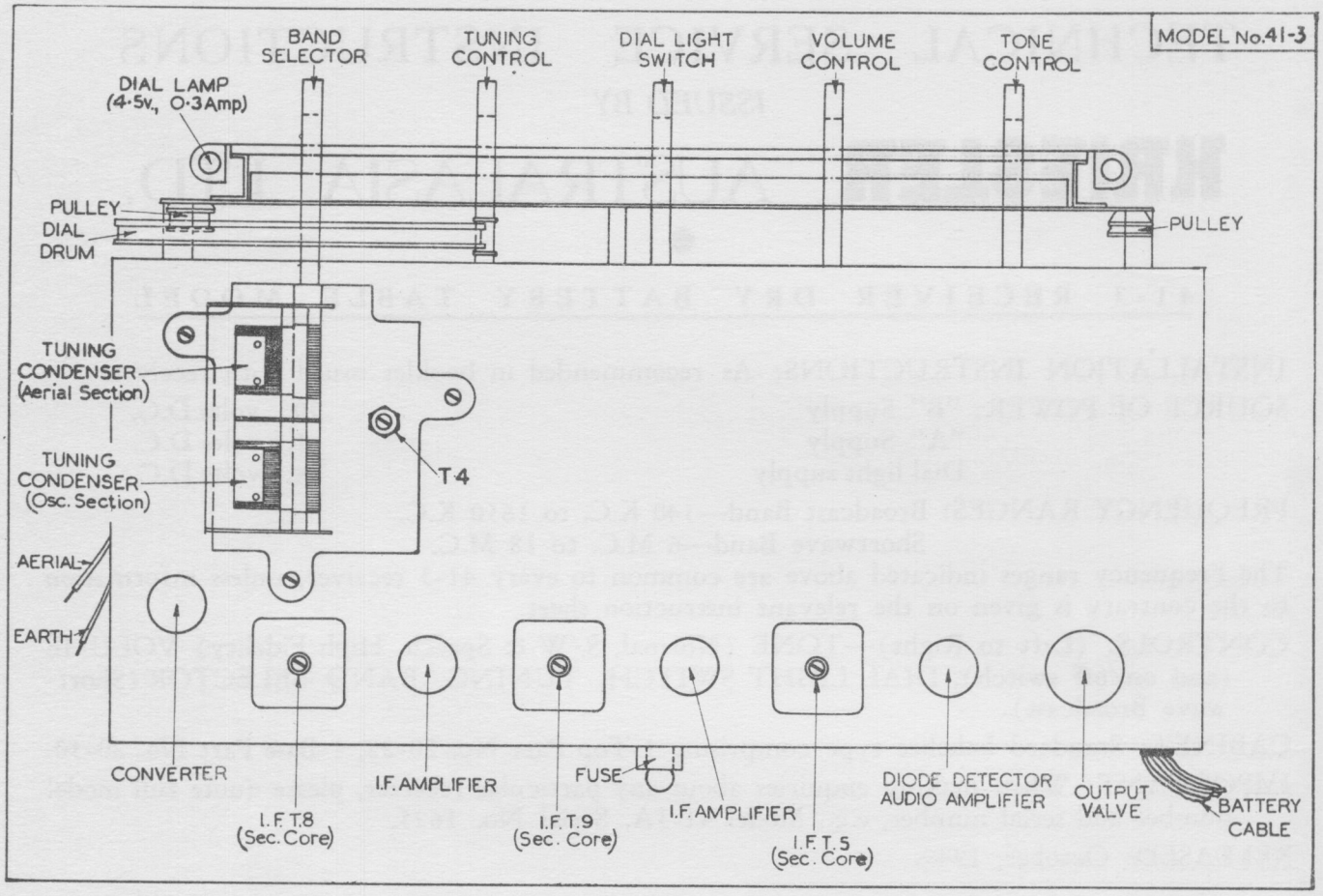
MODEL No.41-3
BAND SELECTOR
TUNING CONTROL
DIAL LIGHT SWITCH
VOLUME CONTROL
TONE CONTROL
DIAL LAMP (4·5v., 0·3Amp)
PULLEY
DIAL DRUM
PULLEY
TUNING CONDENSER (Aerial Section)
TUNING CONDENSER (Osc. Section)
T4
AERIAL
EARTH
CONVERTER
I.F.T.8 (Sec. Core)
I.F. AMPLIFIER
I.F.T.9 (Sec. Core)
FUSE
I.F. AMPLIFIER
I.F.T.5 (Sec. Core)
DIODE DETECTOR AUDIO AMPLIFIER
OUTPUT VALVE
BATTERY CABLE

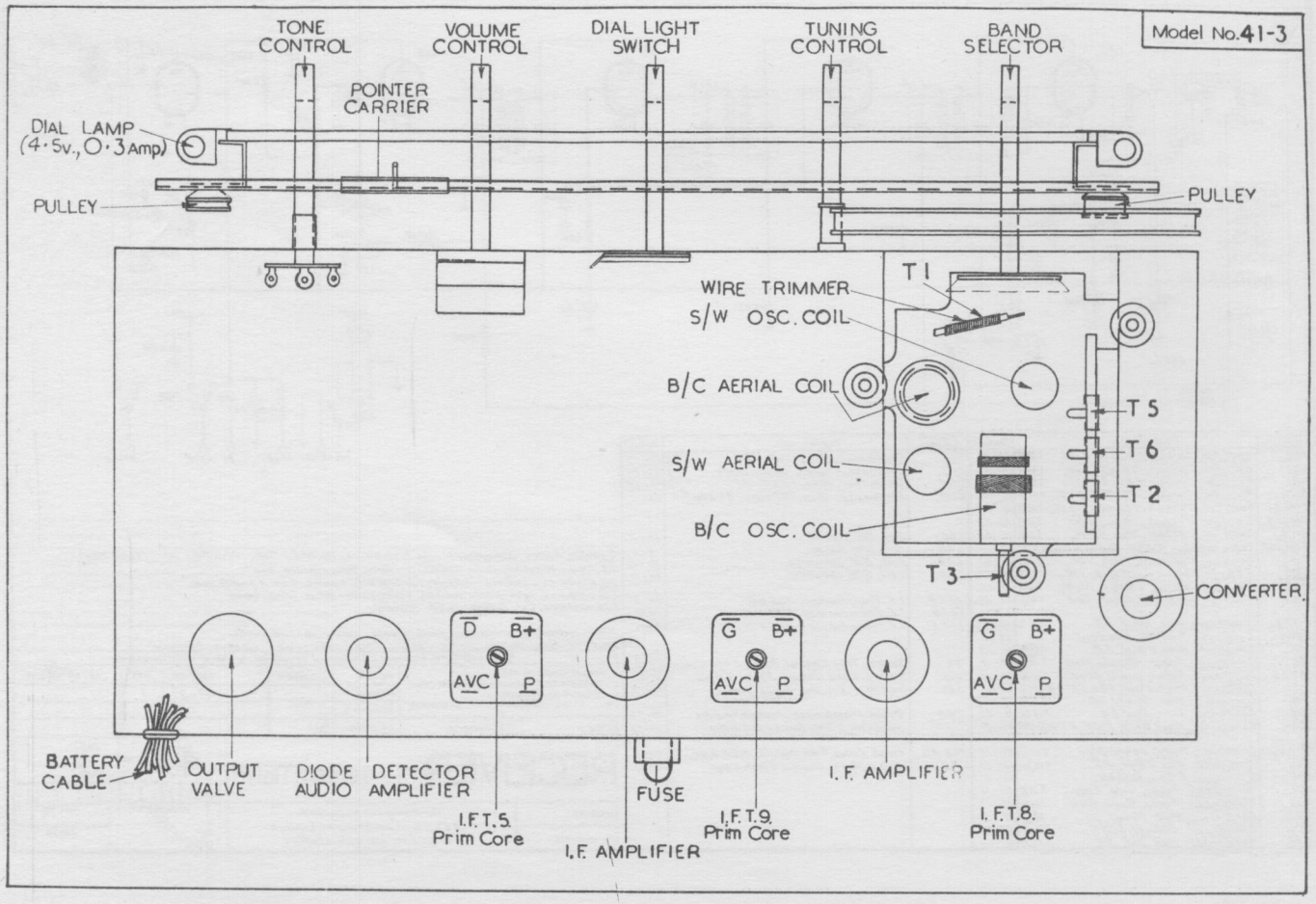
Model No.41-3
TONE CONTROL
VOLUME CONTROL
DIAL LIGHT SWITCH
TUNING CONTROL
BAND SELECTOR
POINTER CARRIER
DIAL LAMP (4·5v., 0·3Amp)
PULLEY
PULLEY
T1
WIRE TRIMMER
S/W OSC. COIL
B/C AERIAL COIL
T5
T6
T2
S/W AERIAL COIL
B/C OSC. COIL
T3
CONVERTER
D
B+
AVC
P
G
B+
AVC
P
G
B+
AVC
P
BATTERY CABLE
OUTPUT VALVE
DIODE DETECTOR AUDIO AMPLIFIER
I.F.T.5. Prim Core
I.F. AMPLIFIER
FUSE
I.F.T.9. Prim Core
I.F. AMPLIFIER
I.F.T.8. Prim Core

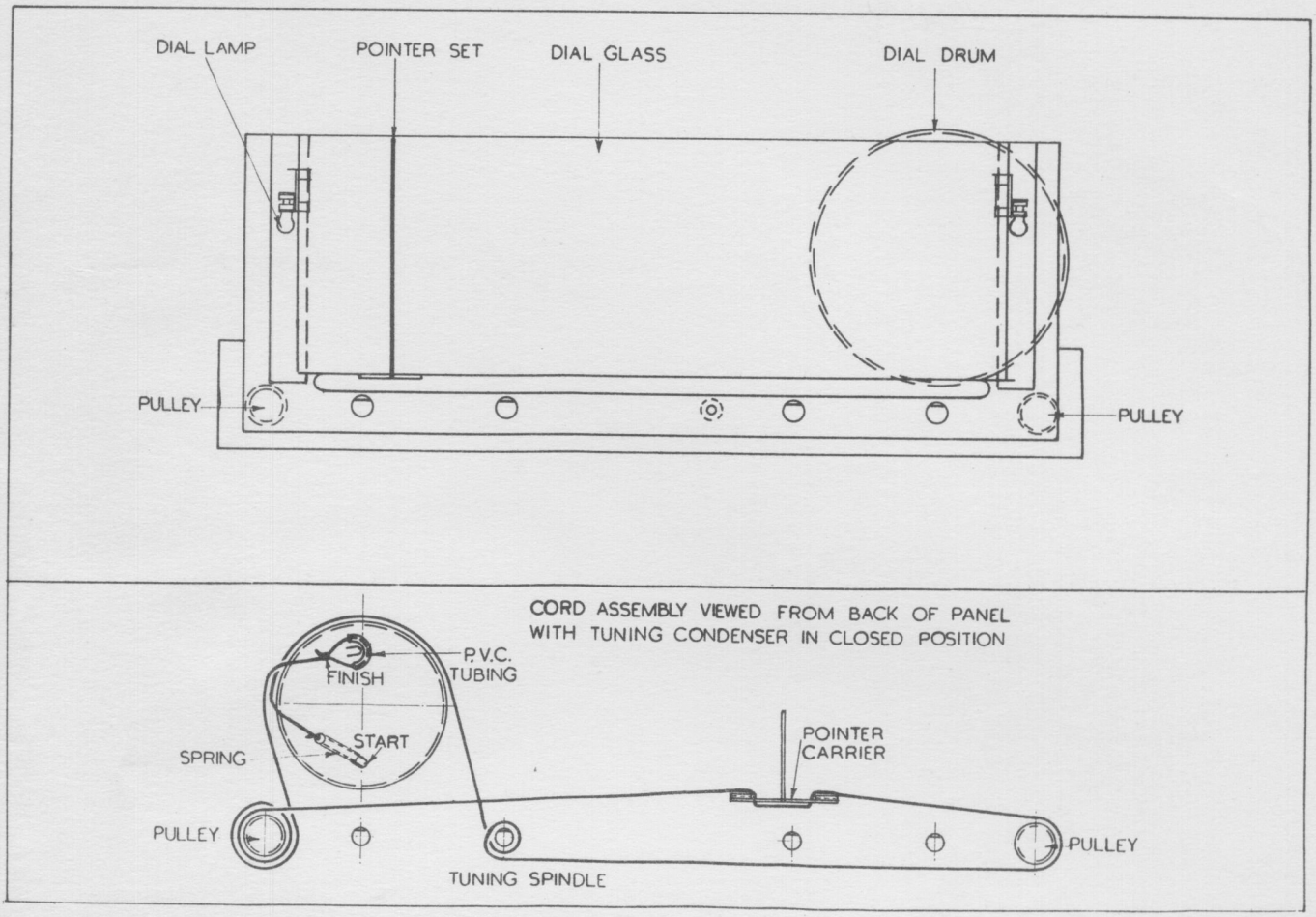

PROCEDURE FOR REMOVING CHASSIS FROM CABINET

1. Invert receiver, break seal and remove cabinet base by unscrewing 4 holding down screws in corners of base.
2. Remove speaker plug from speaker socket in rear of chassis.
3. Remove 4 screws located in inside corners of chassis.
4. Receiver may now be withdrawn from cabinet.

NOTE.—It is not necessary to remove knobs from control spindles on this receiver (unless so desired) in order to remove receiver from cabinet. Knobs fitted to this receiver are push-on type and removal of same is accomplished by pulling knob off the control spindle.

RECEIVER MODEL No. 41-3.

Typical Voltage Analysis.

VALVE COMPLEMENT.
IR5 —Converter.
IT4 —I.F. Amp.
IT4 —I.F. Amp.
IS5 —Det. Audio Amp.
IQ5GT—Power Amp.

IR5—
Plate ..... = 85v. D.C.
Screen ..... = 67v. D.C.
Fil ..... = 1.37v. D.C.

IS5—
Plate ..... = 25v. D.C.
Screen ..... = 20v. D.C.
Fil ..... = 1.37v. D.C.

IT4—
Plate ..... = 85v. D.C.
Screen ..... = 18.5v. D.C.
Fil ..... = 1.37v. D.C.

IQ5GT—
Plate ..... = 82v. D.C.
Screen ..... = 83v. D.C.
Fil ..... = 1.37v. D.C.
Bias ..... = —5.6v. D.C.

"A" Supply Current drain 290m. A.
"B" Supply Current drain 11.75m. A.
"A" Supply Current drain (Dial Light) 300m. A.

NOTE.—All measurements made with respect to chassis.

VOLTMETER SENSITIVITY.—20,000 ohms per volt on D.C. Ranges.
1,000 ohms per volt on A.C. Ranges.