Alignment: The signal generator connections for I.F. alignment only, should be made between chassis and the aerial loop connection nearest the valve socket.

Aerial and oscillator circuit alignment has been completed at the factory and should not normally be necessary to be repeated in service unless either of the coils have been replaced. Subject to these conditions, the following alignment procedure should be adopted:—

Loosely couple the signal generator leads to the aerial in the lid, clipping to the bakelite edge is sufficient, and set the generator so that its output is fairly high. Set variable padder (where used) nearly full in. With generator tuned to 1000 Kc/s. rock the dial while adjusting the oscillator coil slug until maximum output is obtained. The same procedure should be adopted at 1400 Kc/s. with the oscillator trimmer. It will be necessary to repeat the procedure several times. Do not alter the setting of C1.

Positions of Trimmers: The oscillator coil and slug are adjacent to the 1T4 valve. In chasses where both oscillator trimmer and variable padder are used, the oscillator trimmer is located between rear of gang and 2nd I.F. Transformer, while the padder is located under the oscillator coil. In some chasses there is no variable padder used and the oscillator trimmer is then mounted under the oscillator coil.

The aerial trimmer C1 is a small semi fixed capacity situated near the speaker transformer—See note in "alignment."

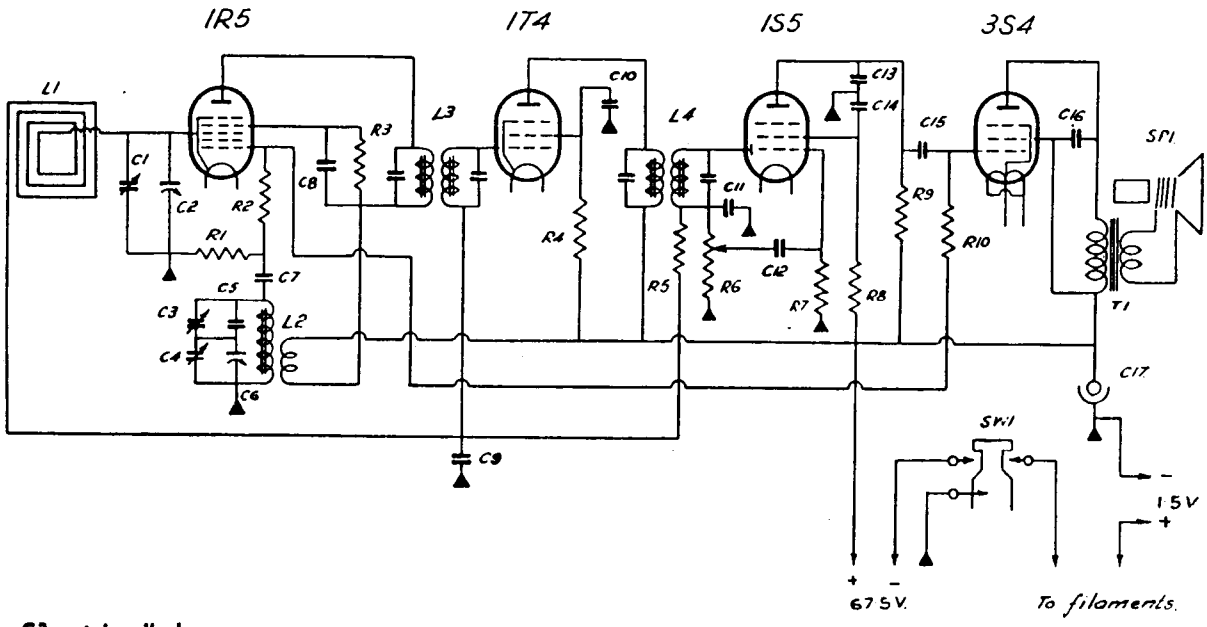

C3 not in all chasses.
C5 then is 425 pfd.

COMPONENT'S LIST

Circuit Reference No.	DESCRIPTION
C1	Semi fixed capacitor approx. 4 pF not used in all chasses.
C2, C6	Variable condenser 12 pF to 375 pF
C3, C4	Trimmer condenser type TC3.
C5	0.0004 uF 400 volt silvered mica condenser 2½% tol.
C7, C11, C13	0.0001 uF 400 volt mica condenser 20% tol.
C8, C12, C15, C16	0.005 uF 200 volt miniature paper condenser.
C9, C10, C14	0.02 uF 200 volt miniature paper condenser.
C17	8 mfd., 100 volt peak electrolytic condenser.
R1	50,000 ohms ½ watt carbon resistor, 20% tol.
R2	2,000 ohms ½ watt carbon resistor, 20% tol.
R3	10,000 ohms ½ watt carbon resistor, 20% tol.

Circuit Reference No.	DESCRIPTION
R5	2 megohms ½ watt carbon resistor, 20% tol.
R6	1 megohm Potentiometer, type RL367.
R7	10 megohm 1 watt carbon resistor, 20% tol.
R8, R10	3 megohm ½ watt carbon resistor, 20% tol.
R9	500,000 ohms ½ watt carbon resistor, 20% tol.
R4	100,000 ohms ½ watt carbon resistor, 20% tol.
L1	Loop aerial type RJ52 (in lid of case).
L2	Oscillator coil type RJ54.
L3	I.F. Transformer type KIF14 or IF14.
L4	I.F. Transformer type KIF15 or IF15.
SP1	Permagnetic speak type 3C.
SW1	Slide switch.
T1	Speaker transformer Z = 5,000 ohms.