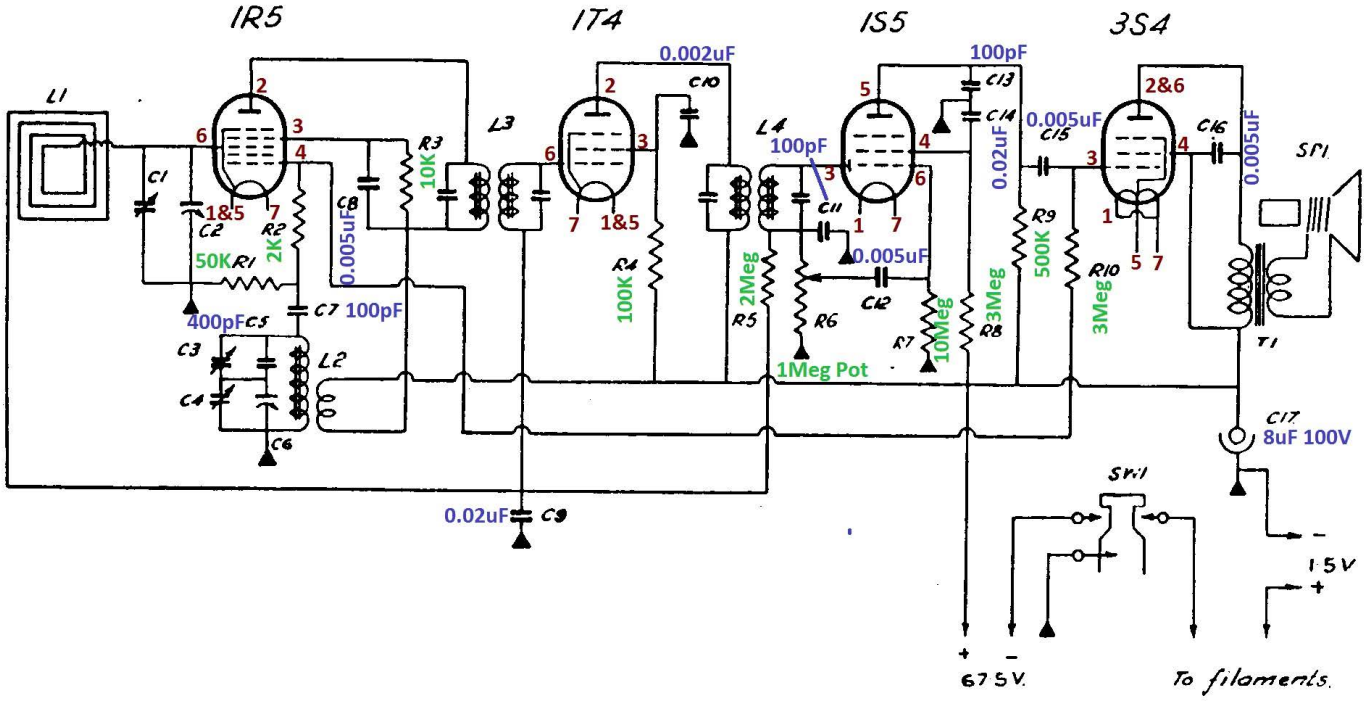

C3 not in all chasses.
C5 then is 425 pfd.

COMPONENT'S LIST