ALPINE SERVICE MANUAL

BRIDGEABLE 4-CHANNEL POWER AMPLIFIER

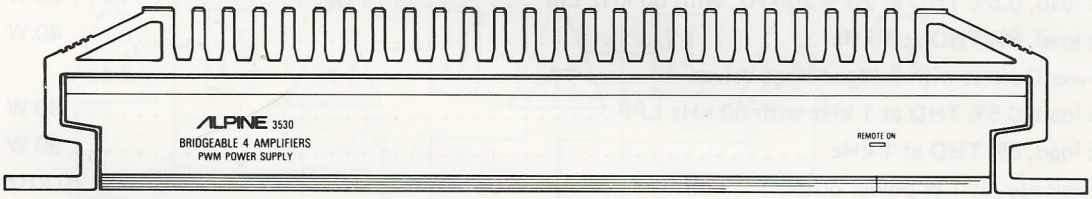

3530

Contents

Specifications 2
Block Diagram . . . . . 3 to 4
Parts Locations and Disassembly Instruction 5
Adjustment Procedures, Adjustment Locations 6
Parts Layout on P. C. Boards and Wiring Diagram . . . . . 7 to 8
Schematic Diagram . . . . . 9 to 10
Electrical Parts List . . . . . 11 to 13
Packing Method View and Packing Assembly Parts List 14
Exploded View . . . . . 15 to 16
Cabinet Assembly Parts List 17
Semiconductor Lead Identifications . . . . . 18 to 19

Specifications

Maximum Power Output with four channels driven
- 4 ohms load, 0.1% THD at 1 kHz . . . . . 45 W
- 4 ohms load, 8% THD at 1 kHz . . . . . 55 W
- 2 ohms load, 0.5% THD at 20 – 20 kHz, with 80 kHz LPF . . . . . 30 W
- 2 ohms load, 8% THD at 1 kHz . . . . . 40 W

Maximum Power Output with bridged stage driven
- 4 ohms load, 0.5% THD at 1 kHz with 80 kHz LPF . . . . . 80 W
- 4 ohms load, 8% THD at 1 kHz . . . . . 90 W

Frequency Response (at 1 W power output) –3 dB . . . . . 20 Hz – 70 kHz
Input Sensitivity/Impedance Din Jack . . . . . 500 mV ± 1 dB/10k ± 2k ohms
RCA Jack . . . . . 0.1 ~ 2 V ± 2 dB/10k ± 2k ohms
Damping Factor 45
Signal to Noise Ratio (input shorted, IHF-A weighted) . . . . . 97 dB
Channel Separation at 1 kHz . . . . . 60 dB
Residual Noise (input shorted) . . . . . 2 mW
Speaker Impedance . . . . . 2 and 4 ohms
Power Requirement . . . . . DC 14.4 V (11 ~ 16 V allowable)
Semiconductors 69
Dimensions . . . . . 300(W) x 55(H) x 200(D) mm
Weight . . . . . 3.3 kg

Block Diagram

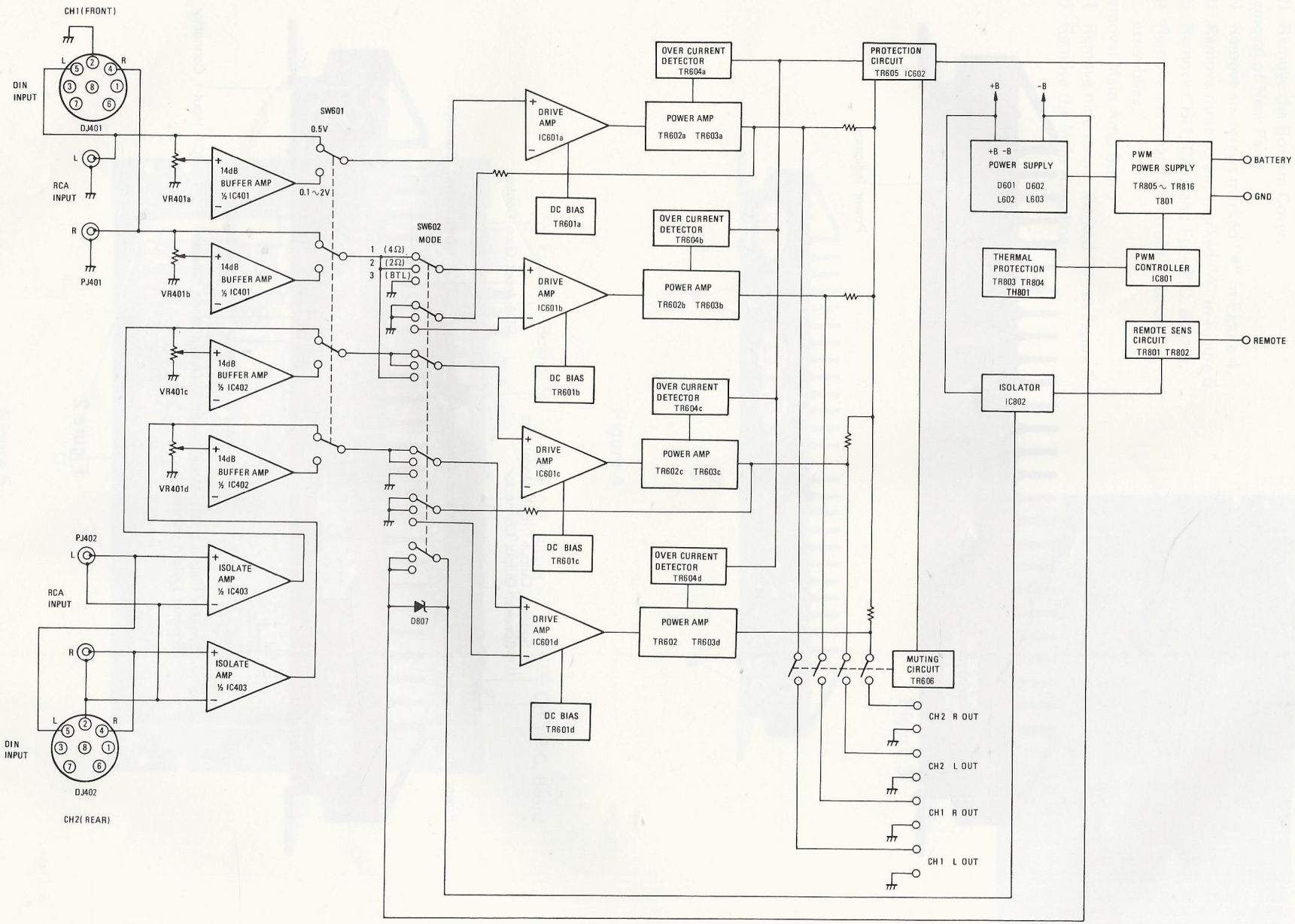

Parts Locations and Disassembly Instructions

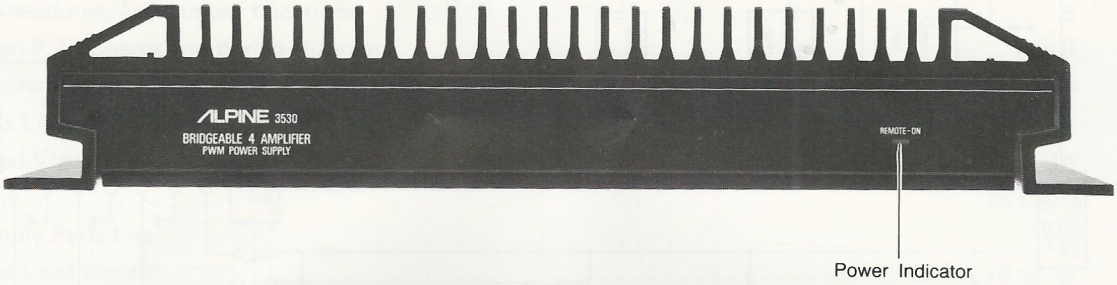

Figure 1

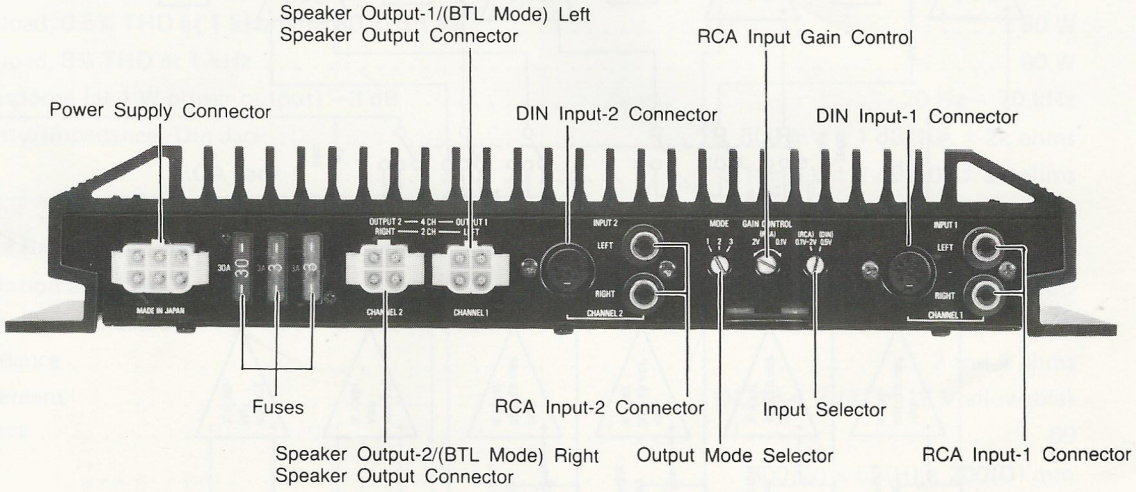

Figure 2

1. Removal of Bottom Cover
   (1) Remove five screws marked "○" in Figure 3.
   (2) Remove the Bottom Cover.
2. Removal of Rear Panel
   (1) Remove six screws marked "●" in Figure 4.
   (2) Remove three screws marked "△" in Figure 5.
   (3) Remove CH-1, CH-2 and Fuse P.C. Boards.
   (4) Remove the Rear Panel from three cord assemblies.
3. Removal Main Amp Board
   (1) Remove nine screws marked "□" in Figure 5.
   (2) Remove the Main Amp Board.

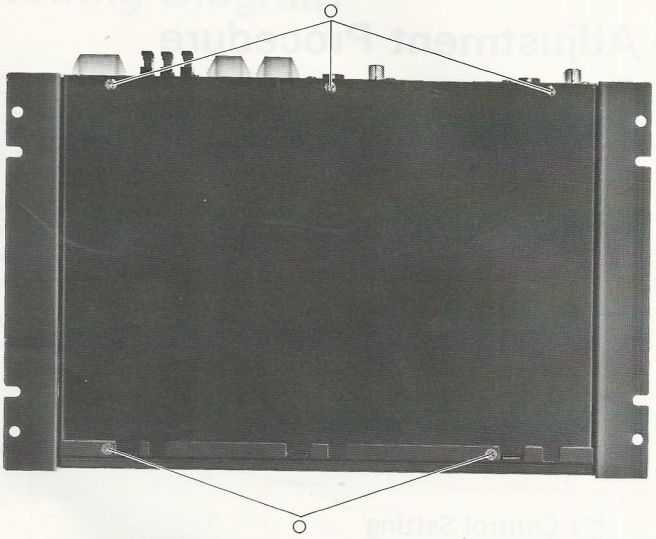

Figure 3

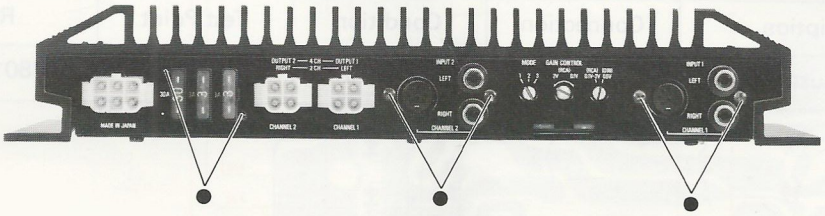

Figure 4

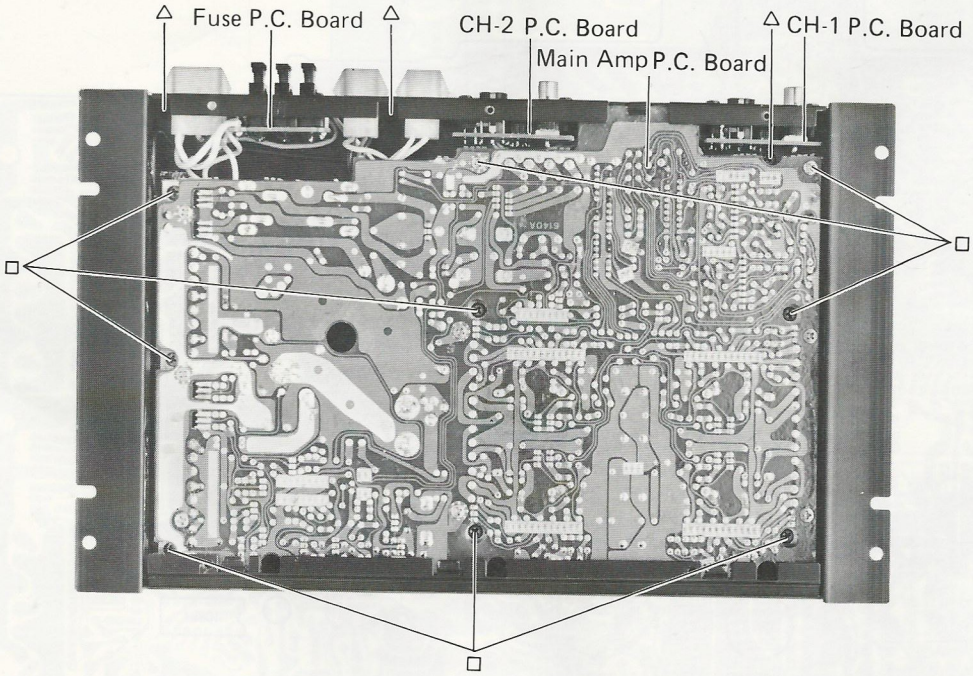

Figure 5

Adjustment Procedure

POWER SUPPLY SECTION

(1) Connection

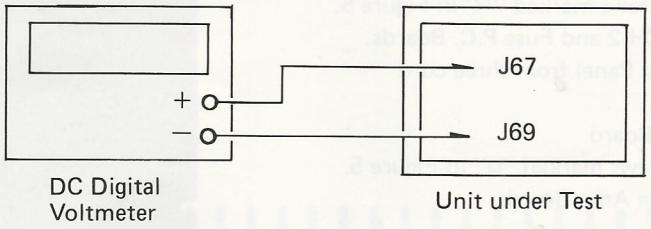

Figure 6

(2) Control Setting
Mode Switch . . . . . 1 (4 ohm mode)

(3) Adjustment Procedure

Step	Description	Connection	Condition	Test Point	Remarks
1	Vcc Adjustment	Figure 6	No load	J67, J69	VR801 for 27.0 V

Adjustment Location

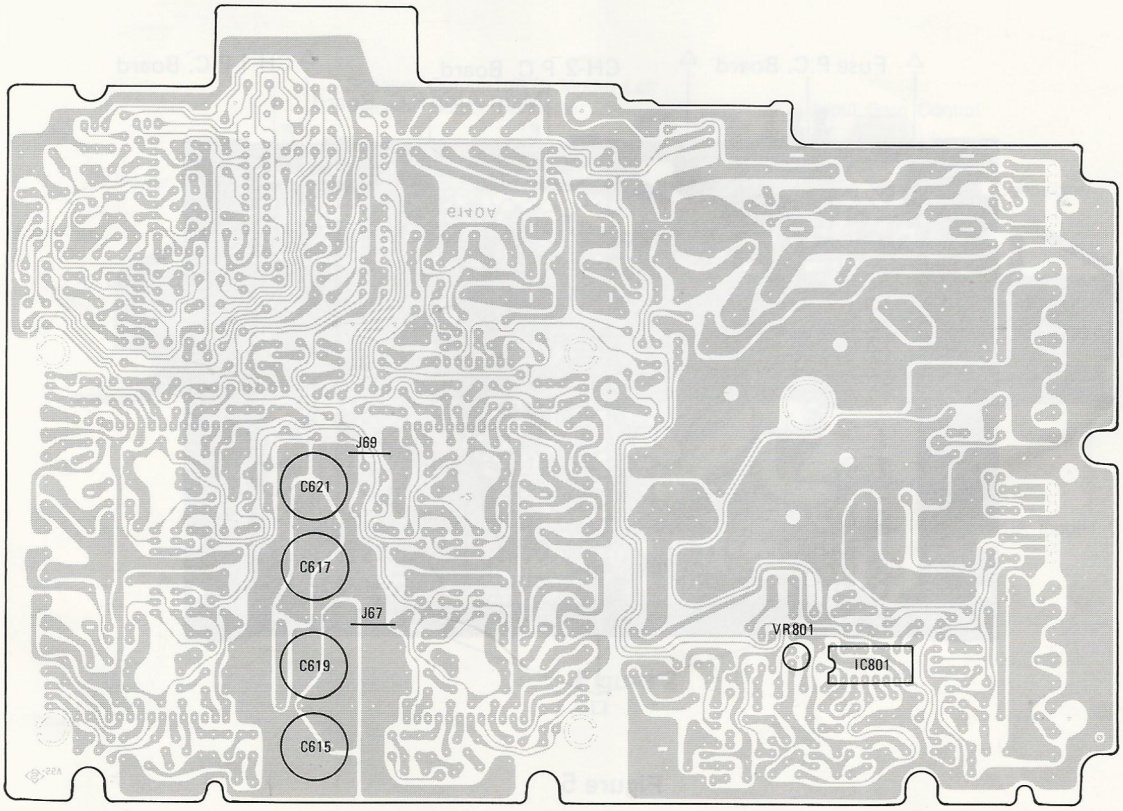

Parts Layout on P.C. Boards and Wiring Diagram

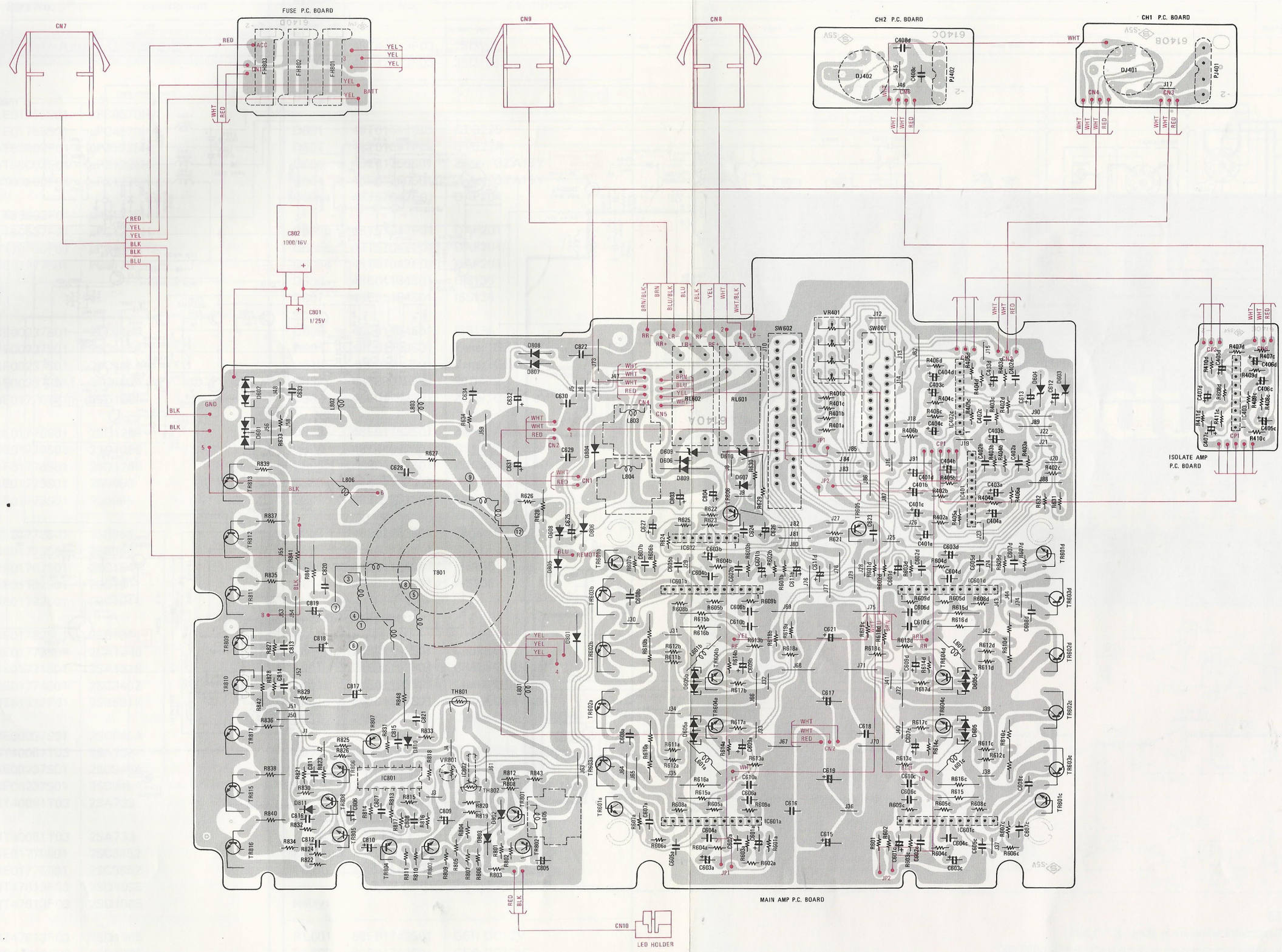

Schematic Diagram

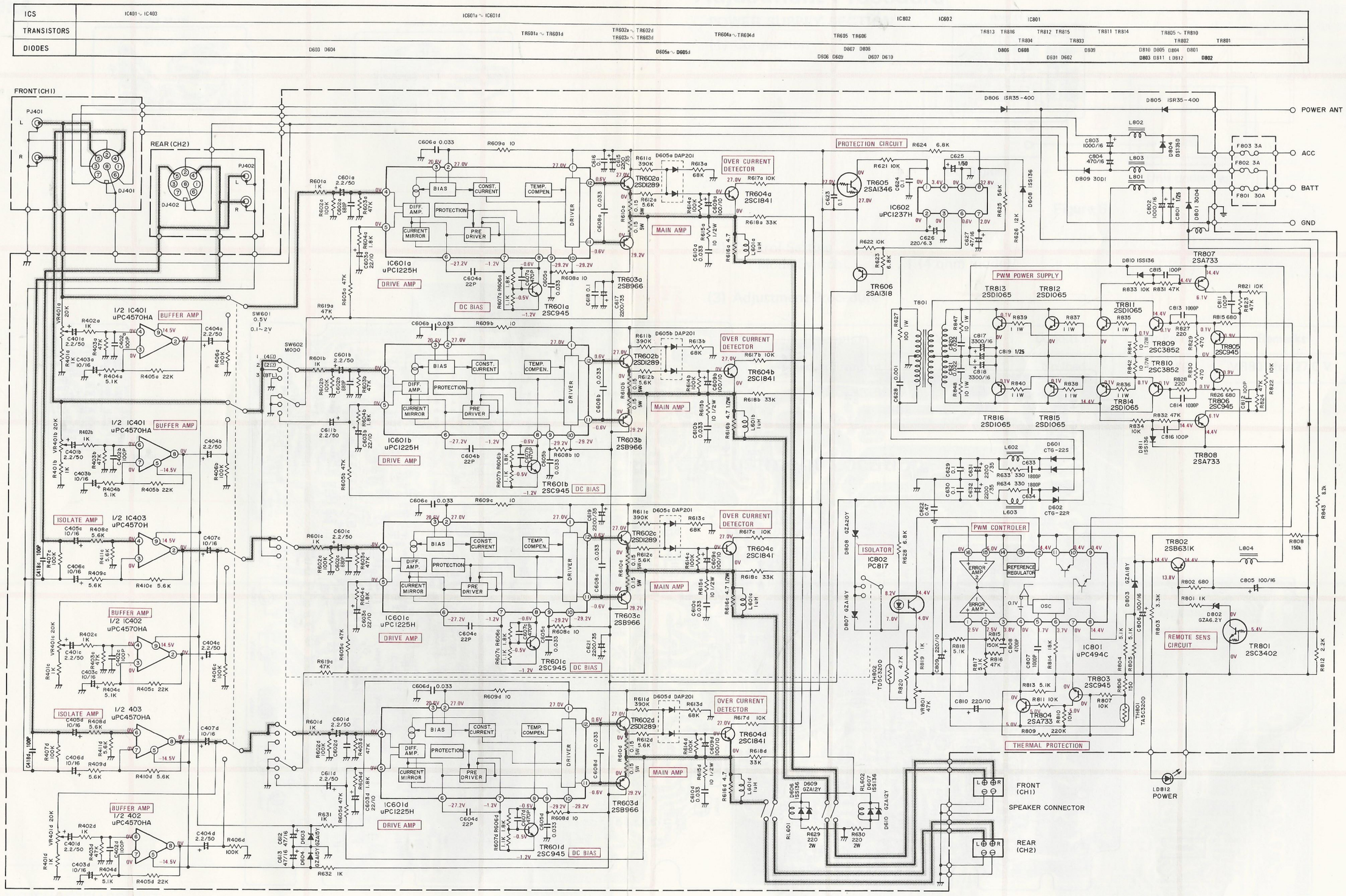

NOTES:

1. All resistance values are in ohms. K = 1,000
2. All capacitance values are in microfarads. P = 1/1,000,000
3. DC voltages are measured by a volt meter with 20 kΩ/V input impedance at no signal and no load.

Electrical Parts List

Resistors: Carbon resistors that are less than 1/4 watts are not entered on the parts list, please confirm them by schematic diagram.
uF = microfarads, pF = picofarads

Symbol No.	Part No.	Description
Main Amp P.C. Board		
IC's		
IC401	51E01755S01	μPC4570HA
IC402	51E01755S01	μPC4570HA
IC601a	51T58602F01	μPC1225H
IC601b	51T58602F01	μPC1225H
IC601c	51T58602F01	μPC1225H
IC601d	51T58602F01	μPC1225H
IC602	51T60527F01	μPC1237H
IC801	51T70759F01	μPC494C
IC802	48E01777S01	PC817B
Transistors		
TR601a	48E00237S01	2SC945A
TR601b	48E00237S01	2SC945A
TR601c	48E00237S01	2SC945A
TR601d	48E00237S01	2SC945A
TR602a	48E01776S01	2SD1289
TR602b	48E01776S01	2SD1289
TR602c	48E01776S01	2SD1289
TR602d	48E01776S01	2SD1289
TR603a	48E01773S01	2SB966
TR603b	48E01773S01	2SB966
TR603c	48E01773S01	2SB966
TR603d	48E01773S01	2SB966
TR604a	48E01782S01	2SC1841
TR604b	48E01782S01	2SC1841
TR604c	48E01782S01	2SC1841
TR604d	48E01782S01	2SC1841
TR605	48E01772S01	2SA1346
TR606	48E01771S01	2SA1318
TR801	48E01774S01	2SC3402
TR802	48T61532F01	2SB631K
TR803	48E00237S01	2SC945A
TR804	48T40081T03	2SA733
TR805	48E00237S01	2SC945A
TR806	48E00237S01	2SC945A
TR807	48T40081T03	2SA733
TR808	48T40081T03	2SA733
TR809	48E01775S01	2SC3852
TR810	48E01775S01	2SC3852
TR811	48T47613F03	2SD1065
TR812	48T47613F03	2SD1065
TR813	48T47613F03	2SD1065
TR814	48R47613F03	2SD1065
TR815	48T47613F03	2SD1065
TR816	48T47613F03	2SD1065
Diodes		
D601	48T61597F01	CTG22S
D602	48T61597F02	CTG22R
D603	48E01750S01	Zener, GZA15Y
D604	48E01750S01	Zener, GZA15Y
D605a	48T57042F01	DAP201
D605b	48T57042F01	DAP201
D605c	48T57042F01	DAP201
D605d	48T57042F01	DAP201
D606	48E01184S01	ISS136
D607	48E01184S01	ISS136
D608	48E01184S01	ISS136
D609	48E01749S01	Zener, GZA12Y
D610	48E01749S01	Zener, GZA12Y
D801	48T68079F01	30D4
D802	48E01754S01	Zener, GZA6.2Y
D803	48E01752S01	Zener, GZA18Y
D804	48T44992S01	DS135D
D805	48E01807S01	ISR35-400A
D806	48E01807S01	ISR35-400A
D807	48E01751S01	Zener, GZA16Y
D808	48E01753S01	Zener, GZA20Y
D809	48S40870U01	30D1
D810	48E01184S01	ISS136
D811	48E01184S01	ISS136
Coils & Transformers		
L601a	24E01193S01	Choke Coil, 1μH
L601b	24E01193S01	Choke Coil, 1μH
L601c	24E01193S01	Choke Coil, 1μH
L601d	24E01193S01	Choke Coil, 1μH
L602	24E01783S01	Choke Coil, OWD22
L603	24E01783S01	Choke Coil, OWD22
L801	24E01786S01	Choke Coil, OR25
L802	25C40894G11	Choke Coil, EI19
L803	24E01785S01	Choke Coil, EI16
L804	24E01785S01	Choke Coil, EI16
L806	24E01872S01	Choke Coil, OR22
T801	25E01787S01	Power Transformer
Relays		
RL601	80E01742S01	G5R DC12V
RL602	80E01742S01	G5R DC12V

Symbol No.	Part No.	Description
Switches		
SW601	40E01780S01	Rotary, SRZS4
SW602	40E01781S01	Rotary, SRZS6
Thermistors		
TH801	48S52337F32	TD5C320D
TH802	48S52337F32	TD5C320D
Capacitors		
C401a	23T43247F06	Electrolytic 2.2μF 50V
C401b	23T43247F06	Electrolytic 2.2μF 50V
C401c	23T43247F06	Electrolytic 2.2μF 50V
C401d	23T43247F06	Electrolytic 2.2μF 50V
C402a	21E01756S01	Ceramic 100pF 50V
C402b	21E01756S01	Ceramic 100pF 50V
C402c	21E01756S01	Ceramic 100pF 50V
C402d	21E01756S01	Ceramic 100pF 50V
C403a	23E10757S01	Electrolytic 10μF 16V
C403b	23E10757S01	Electrolytic 10μF 16V
C403c	23E01757S01	Electrolytic 10μF 16V
C403d	23E01757S01	Electrolytic 10μF 16V
C404a	23T43247F06	Electrolytic 2.2μF 50V
C404b	23T43247F06	Electrolytic 2.2μF 50V
C404c	23R43247F06	Electrolytic 2.2μF 50V
C404d	23T43247F06	Electrolytic 2.2μF 50V
C601a	23T43247F06	Electrolytic 2.2μF 50V
C601b	23T43247F06	Electrolytic 2.2μF 50V
C601c	23T43247F06	Electrolytic 2.2μF 50V
C601d	23T43247F06	Electrolytic 2.2μF 50V
C602a	21E01756S06	Ceramic 680pF 50V
C602b	21E01756S06	Ceramic 680pF 50V
C602c	21E01756S06	Ceramic 680pF 50V
C602d	21E01756S06	Ceramic 680pF 50V
C603a	23E01757S10	Electrolytic 22μF 10V
C603b	23E01757S10	Electrolytic 22μF 10V
C603c	23E01757S10	Electrolytic 22μF 10V
C603d	23E01757S10	Electrolytic 22μF 10V
C604a	21E01756S02	Ceramic 22pF 50V
C604b	21E01756S02	Ceramic 22pF 50V
C604c	21E01756S02	Ceramic 22pF 50V
C604d	21E01756S02	Ceramic 22pF 50V
C605a	08E01759S01	Mylar 0.033μF 50V
C605b	08E01759S01	Mylar 0.033μF 50V
C605c	08E01759S01	Mylar 0.033μF 50V
C605d	08E01759S01	Mylar 0.033μF 50V

Symbol No.	Part No.	Description
C605a	08E01759S01	Mylar 0.033μF 50V
C606b	08E01759S01	Mylar 0.033μF 50V
C606c	08E01759S01	Mylar 0.033μF 50V
C606d	08E01759S01	Mylar 0.033μF 50V
C607a	21E00252S22	Ceramic 470pF 50V
C607b	21E00252S22	Ceramic 470pF 50V
C607c	21E00252S22	Ceramic 470pF 50V
C607d	21E00252S22	Ceramic 470pF 50V
C608a	08E01759S01	Mylar 0.033μF 50V
C608b	08E01759S01	Mylar 0.033μF 50V
C608c	08E01759S01	Mylar 0.033μF 50V
C608d	08E01759S01	Mylar 0.033μF 50V
C609a	23E00239S21	Electrolytic 100μF 10V
C609b	23E00239S21	Electrolytic 100μF 10V
C609c	23E00239S21	Electrolytic 100μF 10V
C609d	23E00239S21	Electrolytic 100μF 10V
C610a	08E01759S01	Mylar 0.033μF 50V
C610b	08E01759S01	Mylar 0.033μF 50V
C610c	08E01759S01	Mylar 0.033μF 50V
C610d	08E01759S01	Mylar 0.033μF 50V
C611b	23T43247F06	Electrolytic 2.2μF 50V
C611d	23T43247F06	Electrolytic 2.2μF 50V
C612	23E01757S02	Electrolytic 47μF 16V
C613	23E01757S02	Electrolytic 47μF 16V
C615	23E01757S03	Electrolytic 2200μF 35V
C616	08E01759S02	Mylar 0.1μF 50V
C617	23E01757S03	Electrolytic 2200μF 35V
C618	08E01759S02	Mylar 0.1μF 50V
C619	23E01757S03	Electrolytic 2200μF 35V
C621	23E01757S03	Electrolytic 2200μF 35V
C623	21E01756S03	Ceramic 0.1μF 25V
C624	21E01756S03	Ceramic 0.1μF 25V
C625	23E01757S12	Electrolytic 1μF 50V
C626	23E01757S04	Electrolytic 220μF 6.3V
C627	23S40657F13	Electrolytic 47μF 16V
C628	08E01759S03	Mylar 1000pF 100V
C629	08E01759S02	Mylar 0.1μF 50V
C630	08E01759S02	Mylar 0.1μF 50V
C631	23E01757S03	Electrolytic 2200μF 35V
C632	23E01757S03	Electrolytic 2200μF 35V
C633	21E01756S04	Ceramic 1800pF 50V
C634	21E01756S04	Ceramic 1800pF 50V
C803	23E01757S06	Electrolytic 1000μF 16V
C804	23E00239S19	Electrolytic 470μF 16V
C805	23S40657F14	Electrolytic 100μF 16V
C806	23S40657F14	Electrolytic 100μF 16V

Symbol No.	Part No.	Description
C807	08E01759S04	Mylar 1000pF 50V
C808	08E01759S06	Mylar 4700pF 50V
C809	23E01757S07	Electrolytic 220μF 10V
C810	23E01757S07	Electrolytic 220μF 10V
C811	21E01756S01	Ceramic 100pF 50V
C812	21E01756S01	Ceramic 100pF 50V
C813	21E01756S05	Ceramic 1000pF 50V
C814	21E01756S05	Ceramic 1000pF 50V
C815	21E01756S01	Ceramic 100pF 50V
C816	21E01756S01	Ceramic 100pF 50V
C817	23E01757S08	Electrolytic 3300μF 16V
C818	23E01757S08	Electrolytic 3300μF 16V
C819	08E01791S01	OS 1μF 25V
C820	08E01759S05	Mylar 0.022μF 100V
C821	08E01759S05	Mylar 0.022μF 100V
C822	08E01759S07	TF 0.047μF 50V
Resistors		
VR401	18E01778S01	Variable 20k ohm B x 4
VR801	18E01779S01	Semi-Variable 47k ohm
R610a	09E01758S01	Plate 0.15 ohm x 2 5W
R610b	09E01758S01	Plate 0.15 ohm x 2 5W
R610c	09E01758S01	Plate 0.15 ohm x 2 5W
R610d	09E01758S01	Plate 0.15 ohm x 2 5W
R615a	06E01788S01	Fail Safe 10 ohm 1/2W
R615b	06E01788S01	Fail Safe 10 ohm 1/2W
R615c	06E01788S01	Fail Safe 10 ohm 1/2W
R615d	06E01788S01	Fail Safe 10 ohm 1/2W
R616a	06E01788S02	Fail Safe 4.7 ohm 1/2W
R616b	06E01788S02	Fail Safe 4.7 ohm 1/2W
R616c	06E01788S02	Fail Safe 4.7 ohm 1/2W
R616d	06E01788S02	Fail Safe 4.7 ohm 1/2W
R627	06E01789S01	Metal Oxide 100 ohm 1W
R629	06E01789S02	Metal Oxide 220 ohm 2W
R630	06E01789S02	Metal Oxide 220 ohm 2W
R835	06E01789S03	Metal Oxide 1 ohm 1W
R836	06E01789S03	Metal Oxide 1 ohm 1W
R837	06E01789S03	Metal Oxide 1 ohm 1W
R838	06E01789S03	Metal Oxide 1 ohm 1W
R839	06E01789S03	Metal Oxide 1 ohm 1W
R840	06E01789S03	Metal Oxide 1 ohm 1W
R841	06E01788S01	Fail Safe 10 ohm 1/2W
R842	06E01788S01	Fail Safe 10 ohm 1/2W
R847	06E01789S03	Metal Oxide 10 ohm 1W

Symbol No.	Part No.	Description
R848	06E01789S03	Metal Oxide 10 ohm 1W
Isolate Amp P.C. Board		
IC		
IC403	51E01755S01	μPC4570HA
Capacitors		
C405c	23E01757S09	Electrolytic 10μF 16V
C405d	23E01757S09	Electrolytic 10μF 16V
C406c	23E01757S09	Electrolytic 10μF 16V
C406d	23E01757S09	Electrolytic 10μF 16V
C407c	23E01757S09	Electrolytic 10μF 16V
C407d	23E01757S09	Electrolytic 10μF 16V
C408c	21E01756S01	Ceramic 100pF 50V
C408d	21E01756S01	Ceramic 100pF 50V
Miscellaneous Parts		
LD812	48E00356S01	LED, SLP-151B
F801	65T58596F08	Auto Fuse, 30A
F802	65T58596F01	Auto Fuse, 3A
F803	65T58596F01	Auto Fuse, 3A
DJ401	09E01201S01	8P Din Jack
DJ402	09E01201S01	8P Din Jack
PJ401	09E01200S02	2P Pin Jack
PJ402	09E01200S02	2P Pin Jack
CN7	01E01739S01	6P Cord Ass'y
CN8	01E01740S01	4P Cord Ass'y (A)
CN9	01E01741S01	4P Cord Ass'y (B)
CN10	01E01218S01	2P Cord Ass'y
CP1	01E01790S01	M-W Connector, 5P
CP2	01E01790S02	M-W Connector, 3P
C801	08E01791S01	OS Cap. 1μF 25V
C802	23E01757S06	Electrolytic Cap. 1000μF 16V

Packing Method View

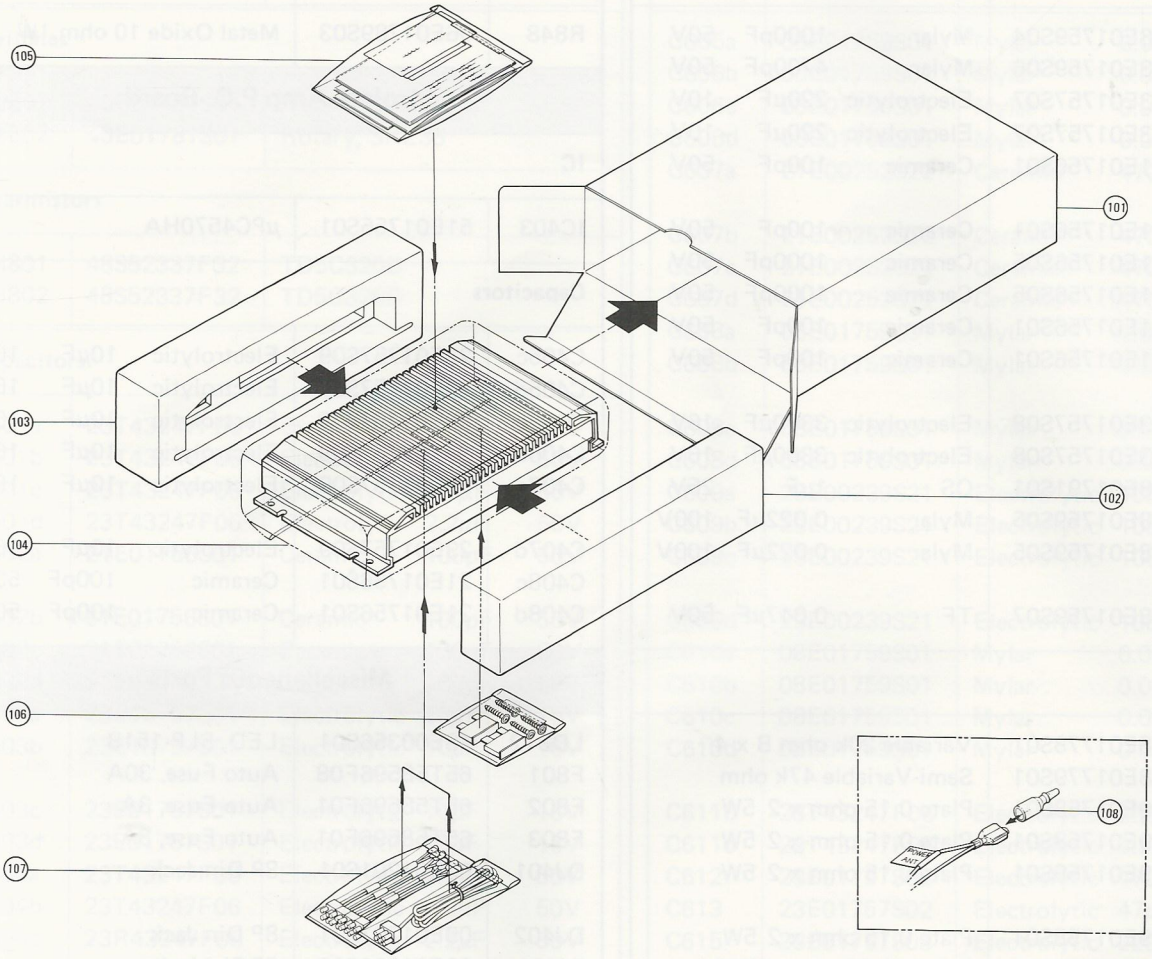

Packing Assembly Parts List

Symbol No.	Part No.	Description
□101	56E01745S01	Carton, Packing (Individual)
△101	56E01881S01	Carton, Packing (Individual)
102	56E01746S01	Tray, Packing (Front)
103	56E01747S01	Tray, Packing (Rear)
104	56E01803S01	Package Bag
□105	01E01225S01	Assembly, Pamphlet
△105	68P66888F67	Owner's Manual
106	01E01222S01	Assembly Kit Installation
107	01E01748S01	Assembly, Kit Wire
108	14E01806S02	Insulator

Symbol No.	Part No.	Description

Note: □ : For North America Model only (A0)
△ : For General Export Model only (G0)
: Others common

Exploded View

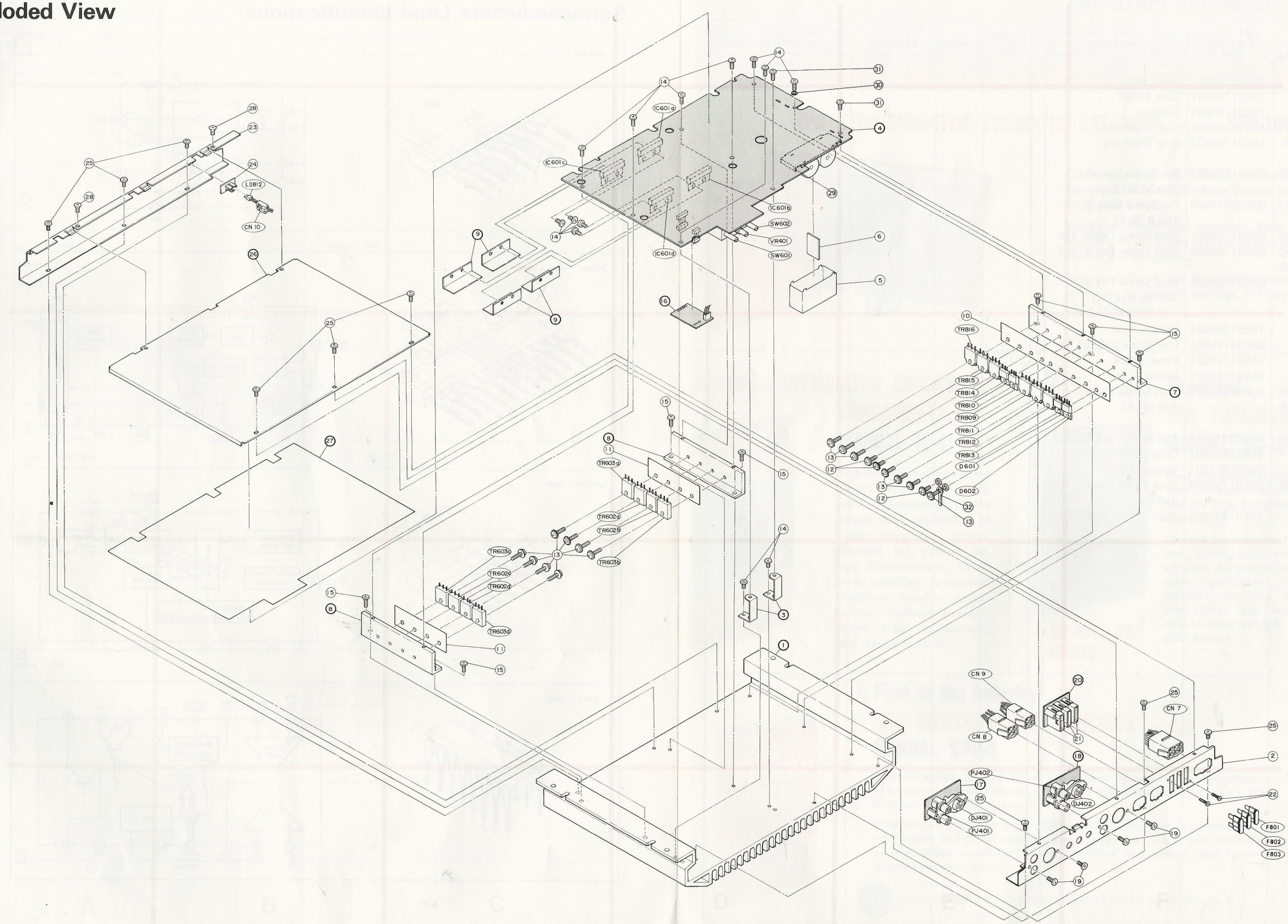

Cabinet Assembly Parts List

Symbol No.	Index	Part No.	Description
2	4C	15E01744S01	Panel, Rear
5	2E	15E01794S01	Case, Shield
6	2E	75E01795S01	Cushion
10	3E	14E01793S01	Cool Sheet (A)
11	3C,4C	14E01793S02	Cool Sheet (B)
12	3D,3E	03E01797S01	Pan Screw Sems-F Tite-B 3x10
13	3E,4C	03E00214S43	Pan Screw Sems-F Tite-B 3x12
14	1D,2C	03E01798S01	Bind Screw Tite-B 3x6
15	4B,4C 3D,3F	03E01798S02	Bind Screw Tite-B 3x8
19	5F	03E01798S03	Bind Screw Tite-B 3x8 Boss (BLK)
21	4F	15E01199S01	Holder, Fuse
22	5F	03E01799S01	Plax Screw 2x8 (BLK)
23	2B	64E01743S01	Panel, Front
24	2B	15E01180S01	Holder, LED
25	2A,3B 4F,5E	03E00214S23	Bind Screw Tite-B 3x6 (BLK)
28	2A,2B	03E00214S46	Flat Screw 3x6 (BLK)
29	2E	15E01800S01	Cover, Shield
30	1E	04E01801S01	Washer, Fiber
31	1E,2E	03E01798S04	Bind Screw Tite-B 3x6 Sn
32	3E	42E01802S01	Clip

Symbol No.	Index	Part No.	Description

Note: The parts whose parts numbers are not entered will not be supplied.

Semiconductors Lead Identifications

μPC4570HA : IC401 ∿ IC403

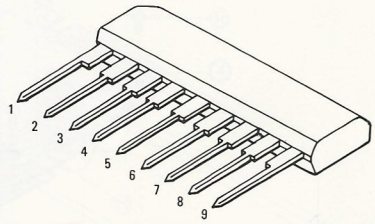

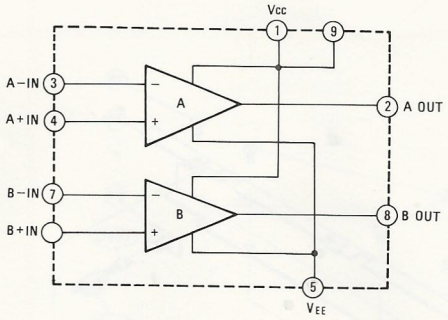

μPC1225H : IC601a ∿ IC601d

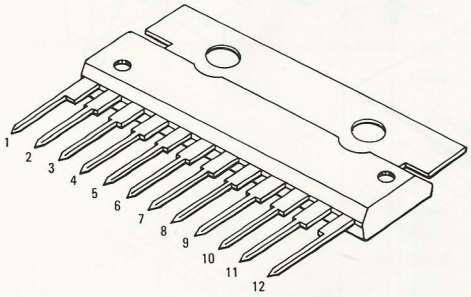

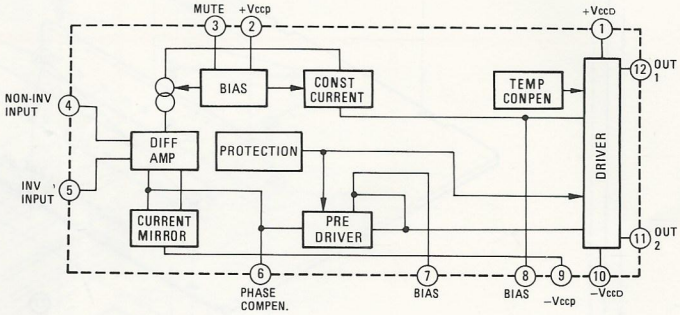

μPC1237H : IC602

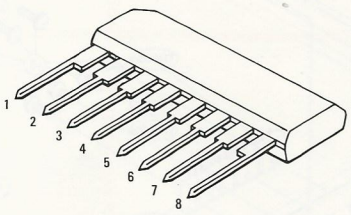

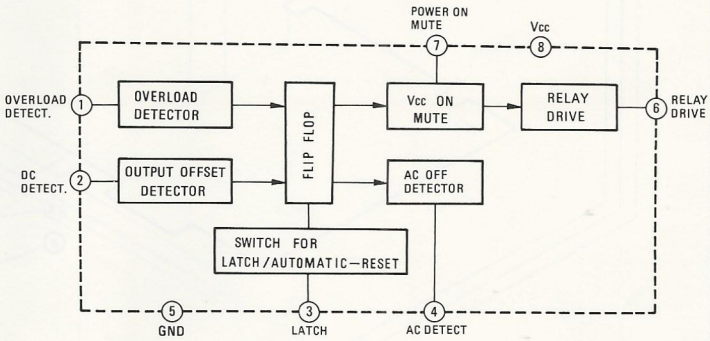

μPC494C : IC802

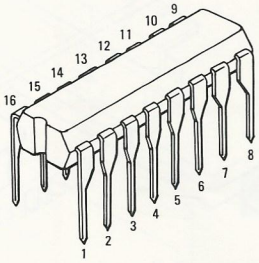

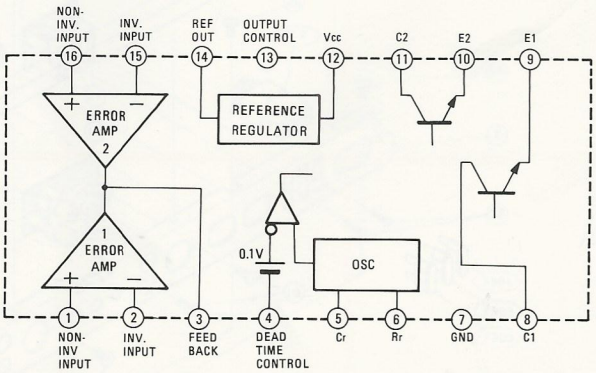

2SC945A : TR601a ∿TR601d TR803 TR805 TR806

2SC1841 : TR604a ∿TR604d

2SA733 : TR804 TR807 TR808

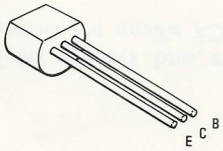

2SD1289 : TR602a ∿ TR602d

2SC966 : TR603a ∿ TR603d

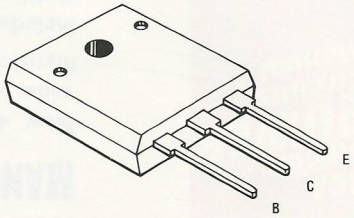

2SA1318 : TR606

2SC3402 : TR801

2SA1346 : TR605

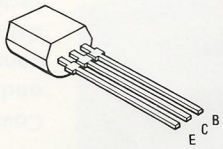

2SB631K : TR802

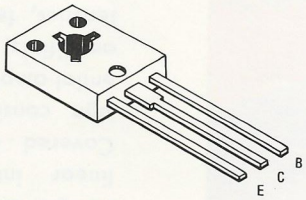

2SC3852 : TR809 TR810

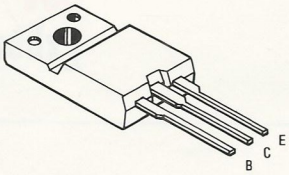

2SD1065 : TR811 ∿ TR816

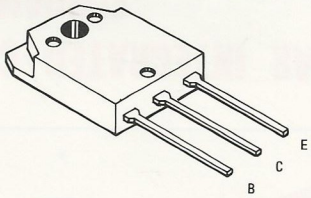
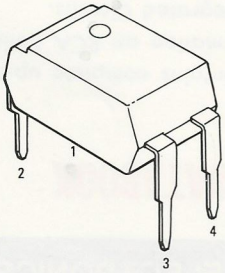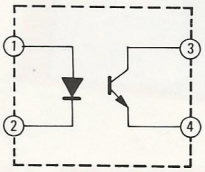
PC817B : IC802