ALPINE SERVICE MANUAL

Power Amplifier

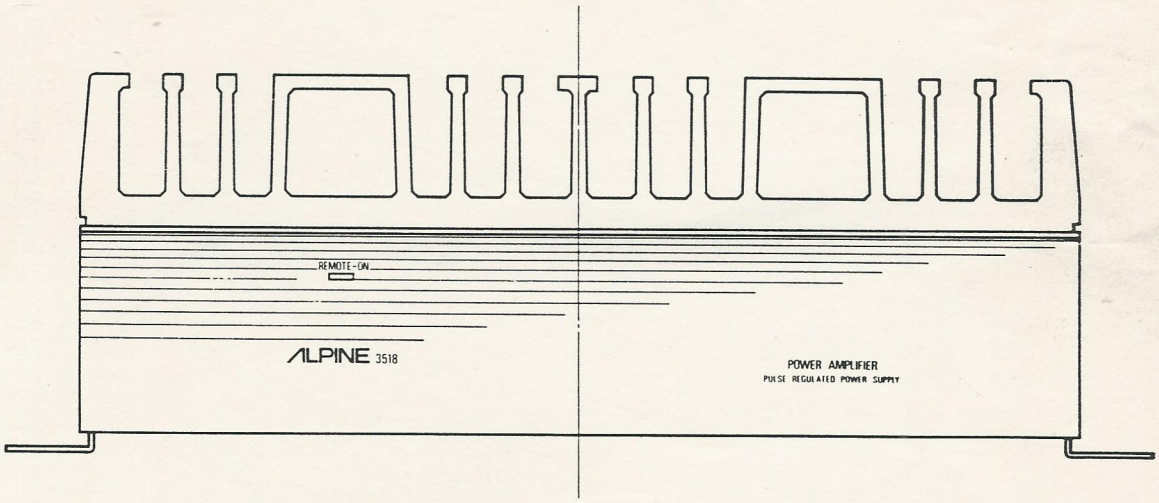

3518

Contents

Specifications 2
Parts Locations and Disassembly Instructions ..... 3 to 4
Block Diagram 4
Parts Layout on P.C. Board ..... 5 to 8
Adjustment Procedures 9
Adjustment Location 9
Semiconductors Lead Identifications 10
Schematic Diagram ..... 11 to 12
Wiring Diagram ..... 13 to 14
Electrical Parts List ..... 15 to 16
Exploded View ..... 17 to 18
Mechanical Parts List 18
Packing Method View 19
Packing Parts List 20

Specifications

Power Output (1 kHz, 8% THD)	34W/Ch.
Distortion	0.1%
Input Sensitivity (Output)	500 mV±1 dB
Input Sensitivity	10k ohms±2k ohms
Signal to Noise Ratio	90 dB (IHF A Weighted)
Frequency Response (−3 dB at 1W Output)	20 Hz to 30 kHz
Current Drain	2.5A
Channel Separation (at 1 kHz)	60 dB
Speaker Impedance	4 ohms
Fuse Requirement	15A (Battery), 3A (ACC), 3A (Battery)
Damping Factor (1W/1 kHz)	40
Power Source	14.4V DC (11 to 16V allowable)
Semiconductors	2 ICs, 19 Transistors, 18 Diodes, 1 Zener Diode
Dimensions (W×H×D)	200 mm×75 mm×150 mm
Weight	2.2 kg

Parts Locations and Disassembly Instructions

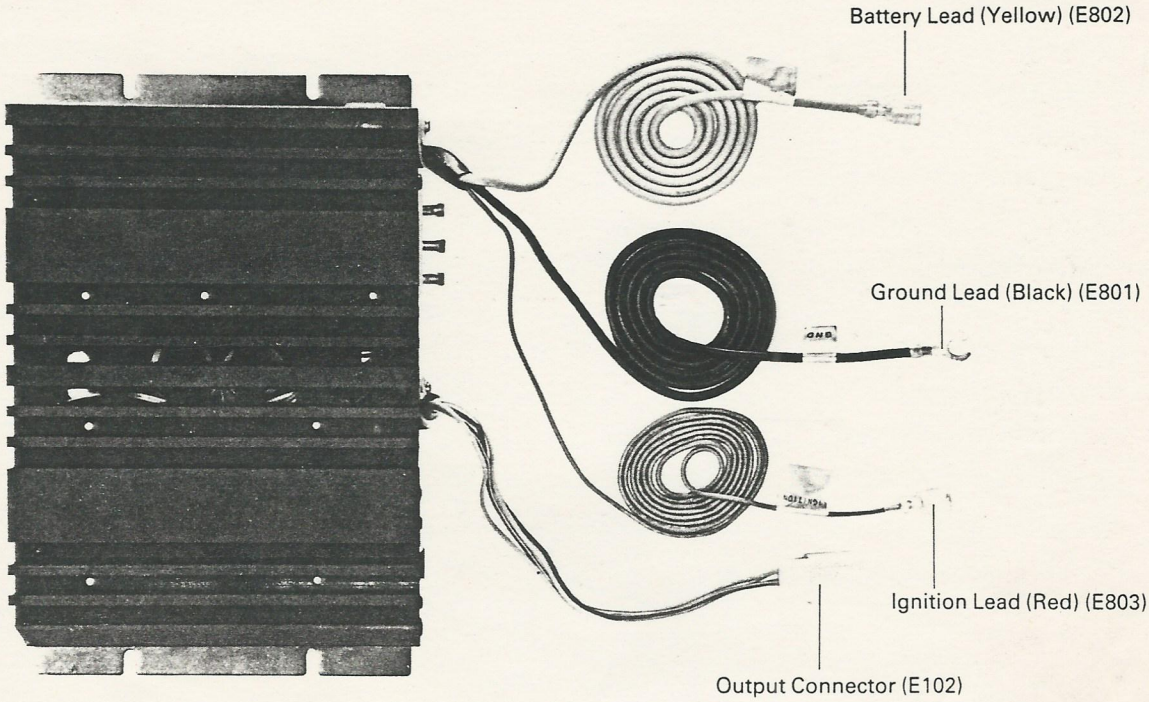

Figure 1

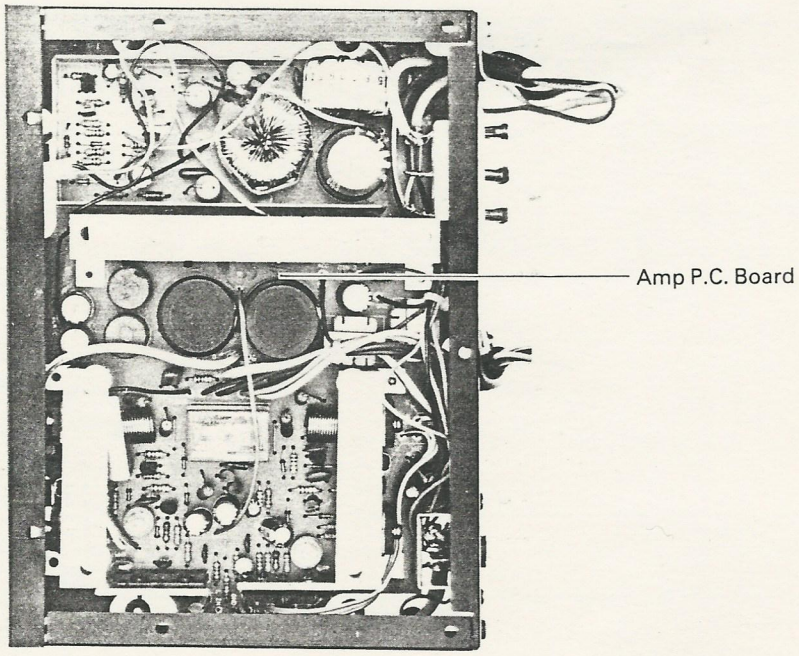

Figure 2

1. Removal of Bottom Cover
(1) Remove eight screws marked "○" in Figure 3.

2. Removal of Rear Cover
(1) Remove seven screws marked "△" in Figure 3.
(2) Disconnect all wires from fuse holder.
(3) Remove rear cover.

3. Removal of Main Chassis with Front Panel
(1) After removal of bottom cover and rear cover, remove eight screws marked "□" in Figure 4.
(2) Remove front panel with main chassis.
(3) Remove LED connector from front panel and black wire from main chassis.

4. Removal of Amp P.C. Board
(1) After removal of bottom cover, rear cover and main chassis, remove seven special screws marked "★" in Figure 4.
(2) Disconnect all wires from amp P.C.B.

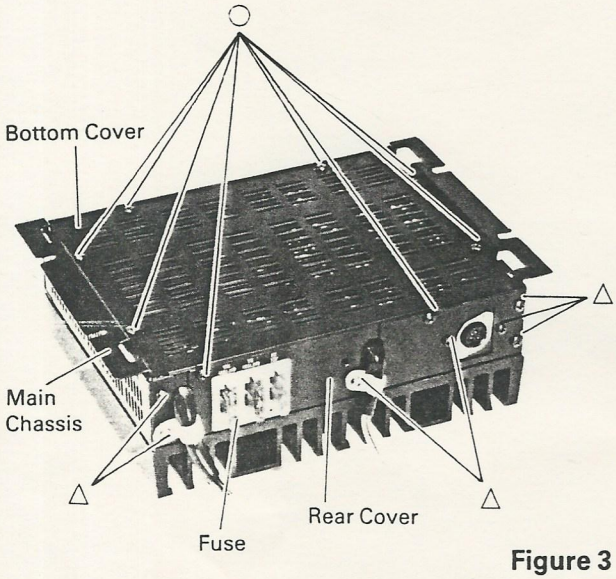

Figure 3

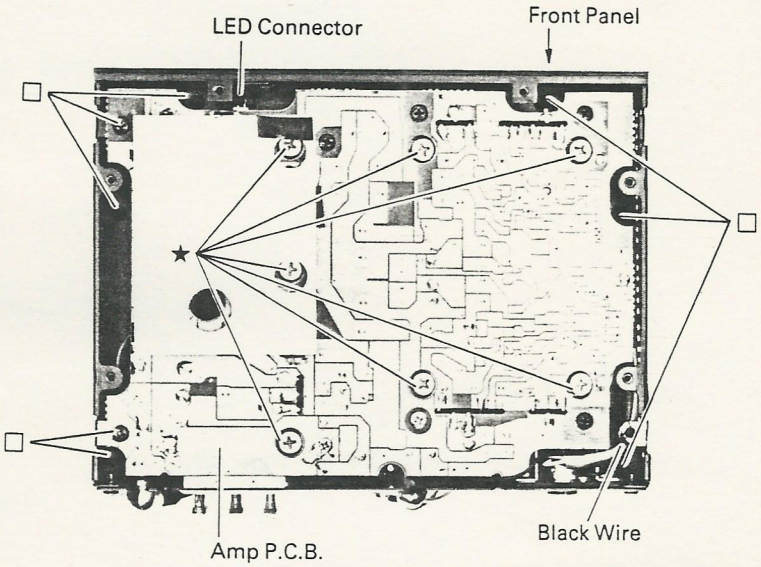

Figure 4

Block Diagram

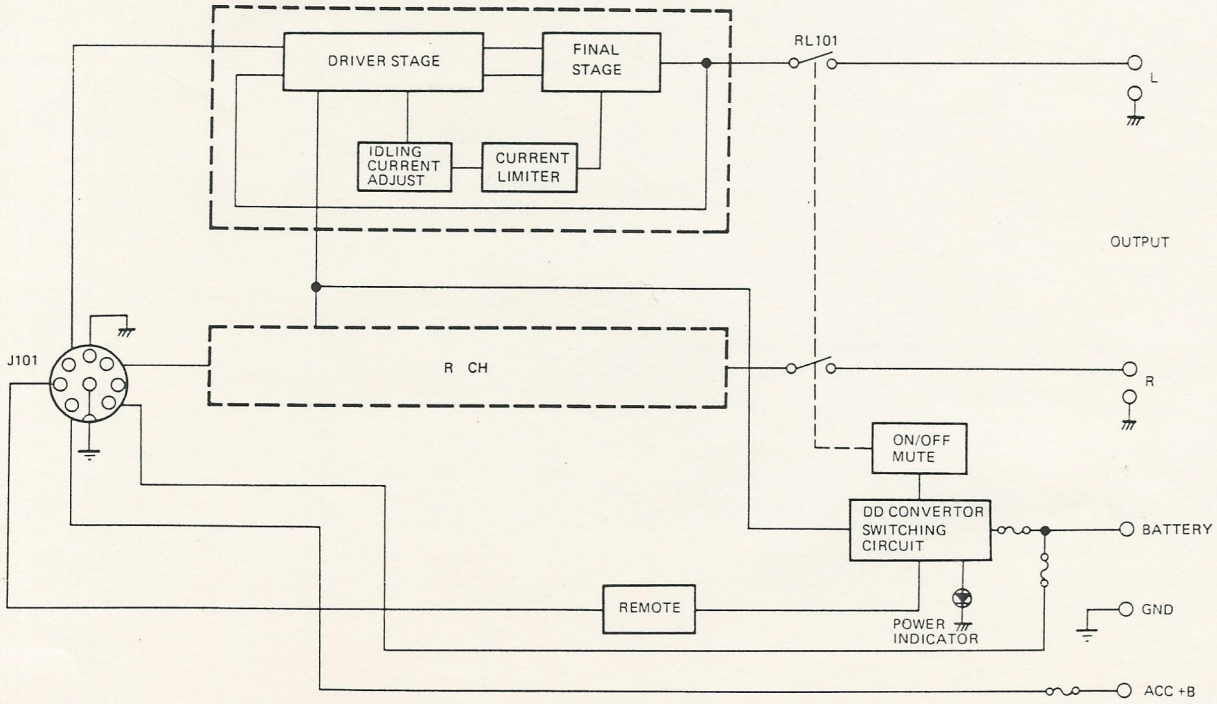

Parts Layout on P.C. Boards

● Amp P.C. Board

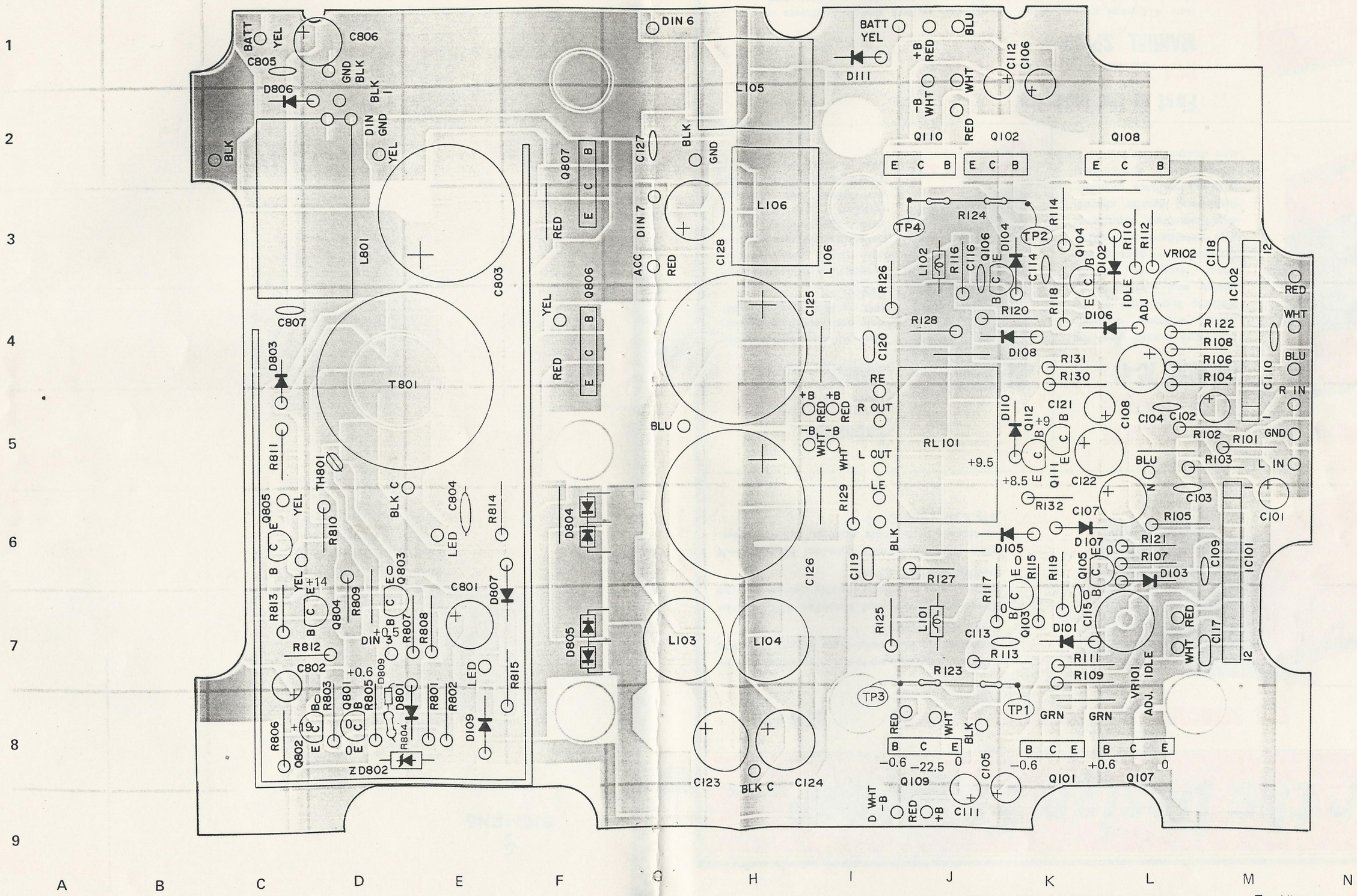

Top View

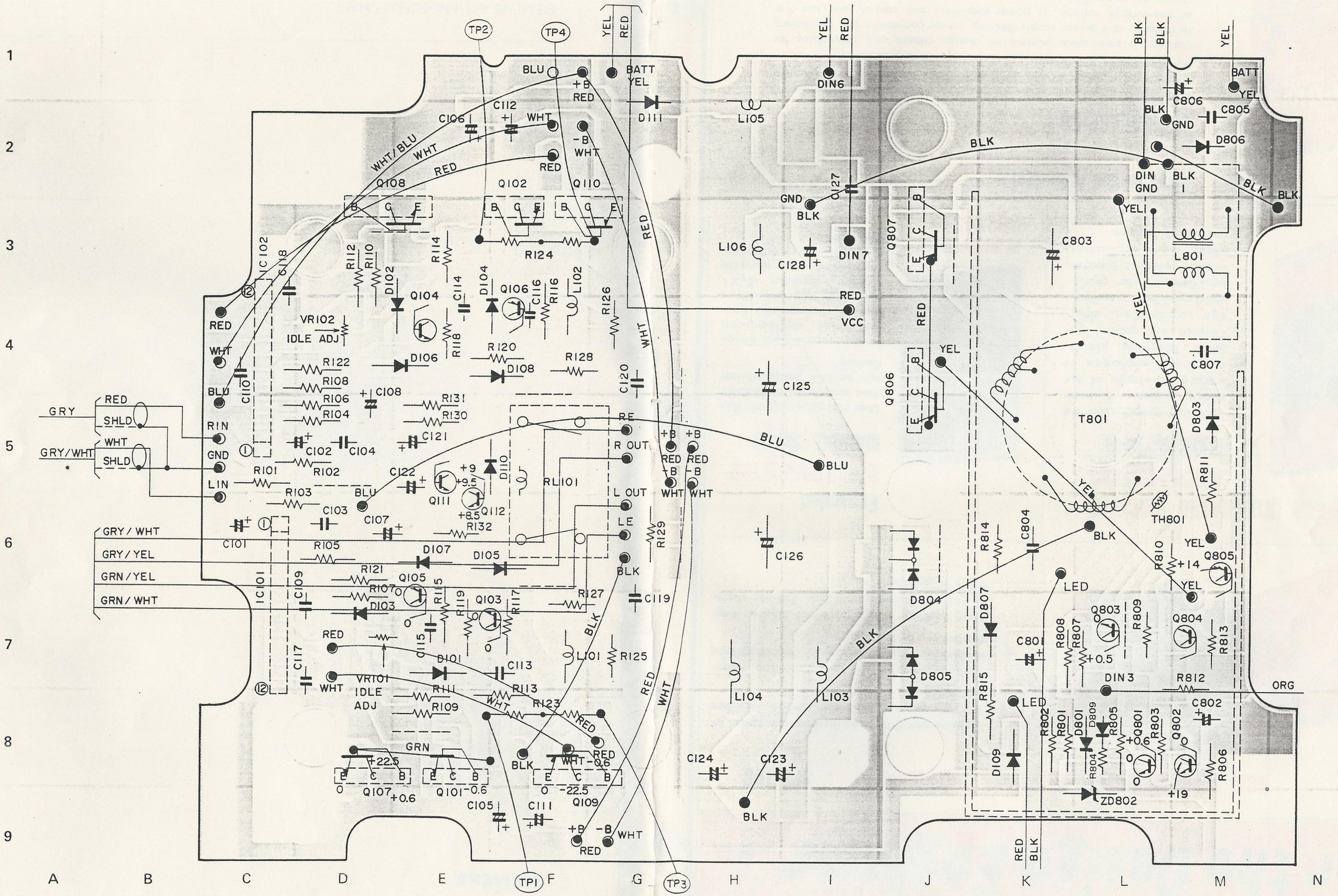
TP2
TP4
TP1
TP3
BLU
+B
RED
BATT
YEL
D111
L105
DIN6
C806
C805
GND
D806
DIN
GND
BLK
I
L801
C803
C807
T801
D803
R811
TH801
Q805
LED
Q803
R809
Q804
R813
R812
ORG
DIN3
C802
ZD802
R806
Q801
R803
Q802
R805
R804
D809
D801
R801
R802
R807
R808
C801
D807
R814
C804
R810
+14
D804
D805
D109
R815
C127
GND
BLK
L106
C128
DIN7
Q807
Q806
RED
VCC
YEL
C125
C126
L104
L103
C124
C123
BLK
C112
WHT
C106
WHT/BLU
WHT
RED
Q108
Q102
Q110
R124
R114
R112
R110
D102
Q104
C114
D104
Q106
C116
R116
L102
R126
VR102
IDLE ADJ
R118
R120
D106
D108
R128
C120
R122
R108
R106
R104
C108
R131
R130
C121
C102
C104
R101
R102
C122
Q111
Q112
+9
+9.5
+8.5
D110
RL101
R132
R103
C103
C107
C101
R105
D107
D105
R121
Q105
R107
D103
R115
R119
Q103
R117
R127
C119
L101
R125
C113
D101
VR101
IDLE
ADJ
R111
R109
R113
R123
GRN
+22.5
Q107
+0.6
Q101
-0.6
BLK
WHT
-0.6
Q109
-22.5
C105
C111
+B
-B
WHT
RED
R129
R OUT
L OUT
LE
RE
RIN
GND
LIN
IC102
IC101
C118
C110
C109
C117
GRY
RED
SHLD
GRY/WHT
WHT
SHLD
GRY/WHT
GRY/YEL
GRN/YEL
GRN/WHT
A
B
C
D
E
F
G
H
I
J
K
L
M
N
1
2
3
4
5
6
7
8
9

Bottom View

Adjustment Procedures

- **Idle Current Adjustment**

(1) Connections

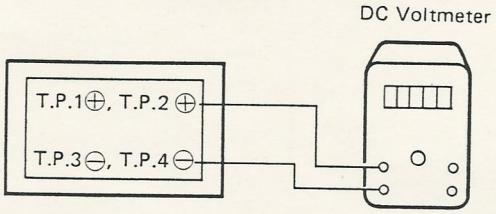

(2) Adjustment Procedure
Rotate the solid variable resistors VR101 (T.P. 1, 3) and VR102 (T.P. 2, 4) clockwise or counterclockwise to obtain 3 mV on the DC Voltmeter.
When rotating them counterclockwise, the idling current increases.

- Idle current=3 (mV)÷0.2 (ohm)=15 (mA)

Adjustment Location

Amp P.C. Board (Top View)

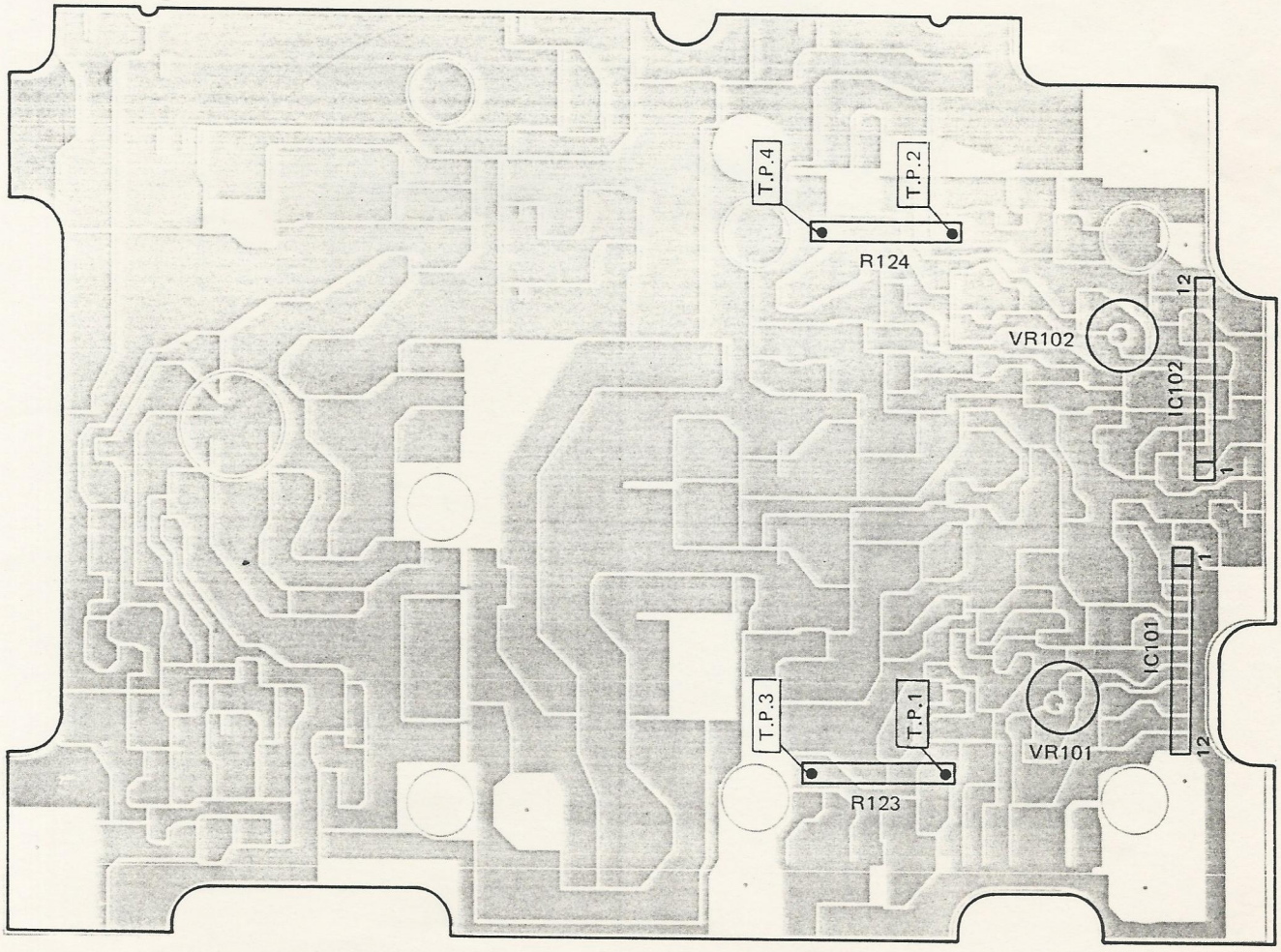

Semiconductors Lead Identifications

(μPC1225H) IC101, IC102

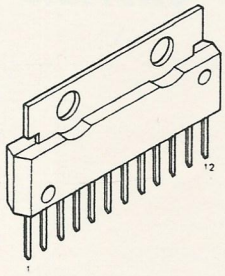

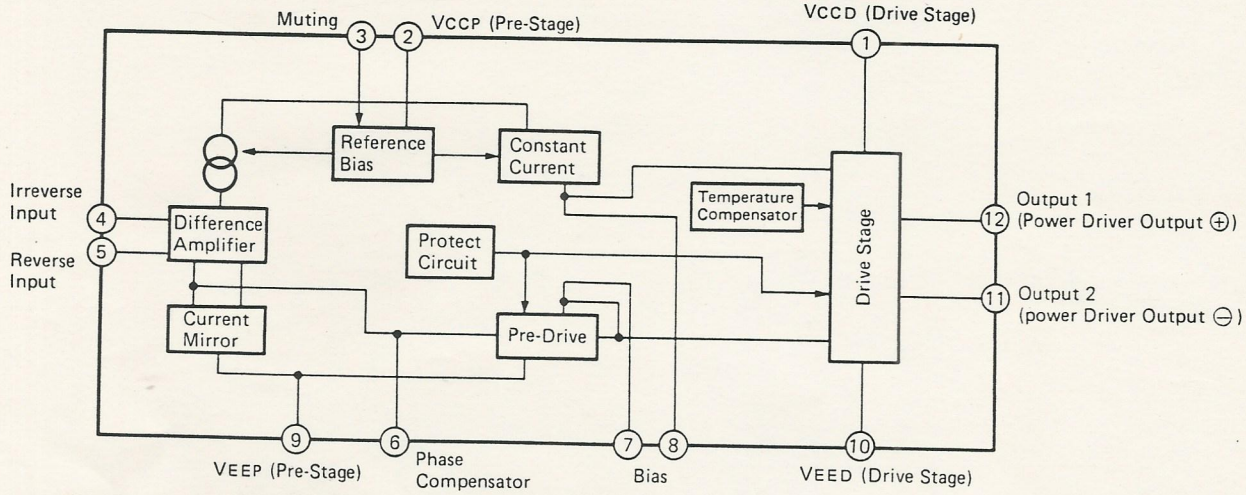

(2SC1815-Y, 2SC945L-P) Q101–Q104, Q111, Q112, Q801–Q803
(2SA1015-Y) Q105, Q106

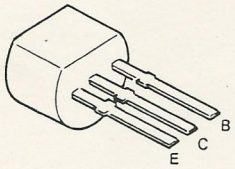

(2SC3181) Q107, Q108
(2SA1264) Q109, Q110

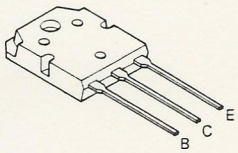

(2SB605-LA) Q804, Q805

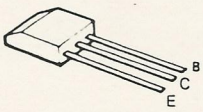

(2SB829) Q806, Q807

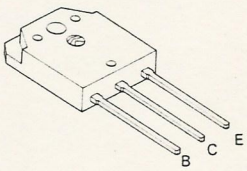

Schematic Diagram

ICs	IC101 IC102
Transistors	Q101 Q103 Q105 Q107 Q109 Q111 Q112 Q803 Q802 Q805 Q801 Q102 Q104 Q106 Q108 Q110 Q804 Q806 Q807
Diodes	D101 D103 D105 D107 D806 D111 D801 D809 D805 D102 D104 D106 D108 D110 D109 D803 ZD802 D804 D807

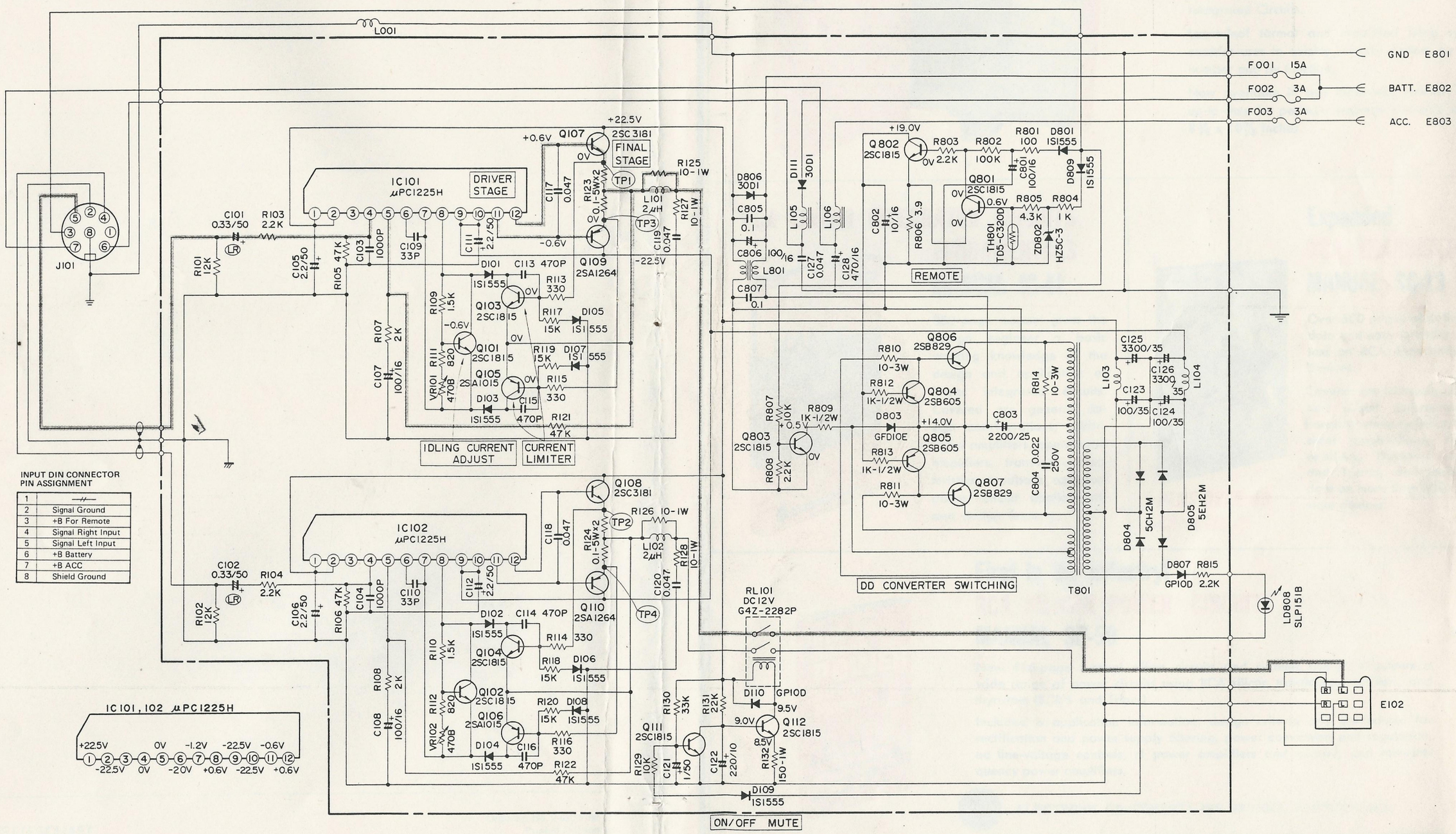

Wiring Diagram

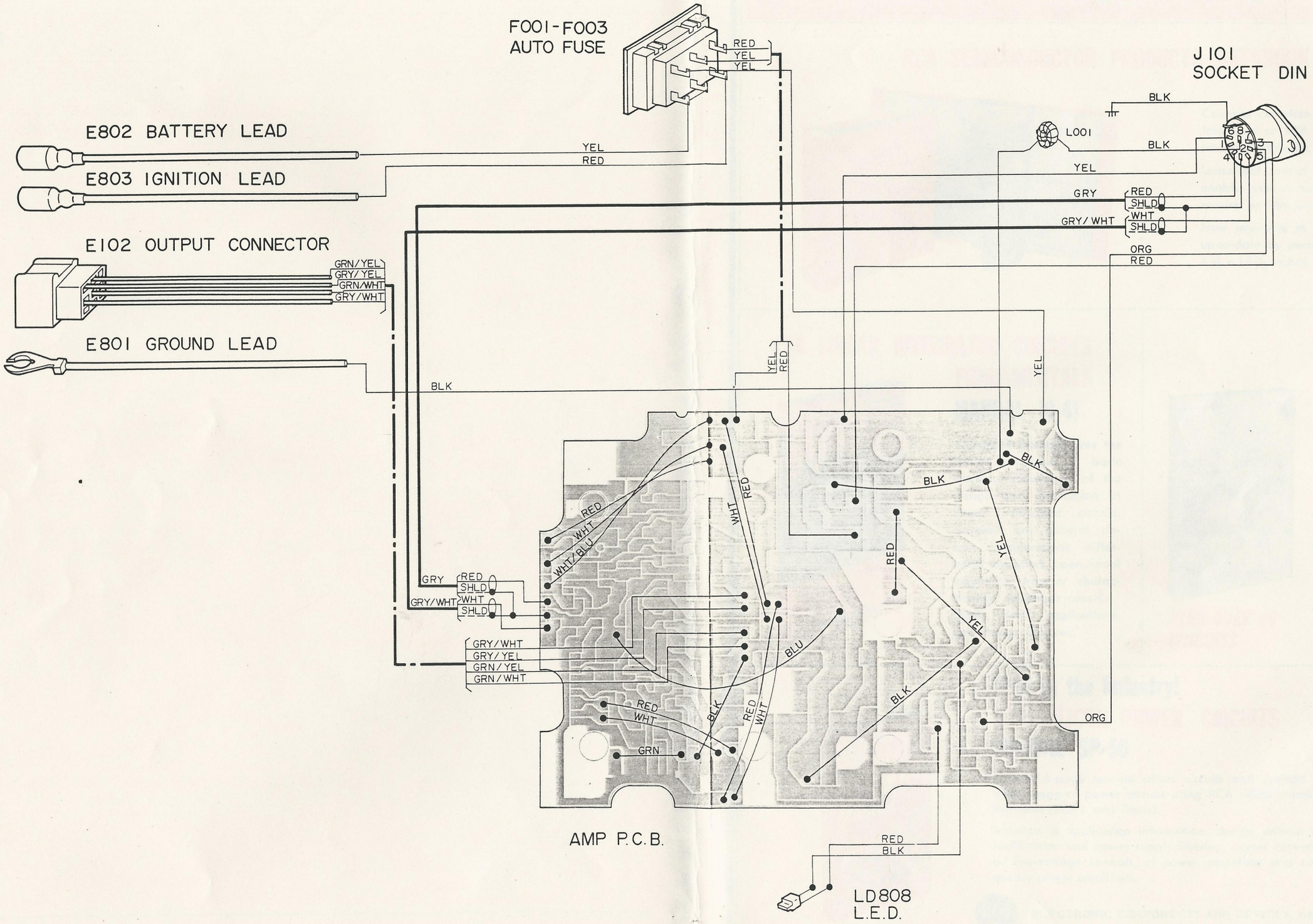

Electrical Parts List

Resistors: (All resistors are carbon film, ±5% unless otherwise noted.)
μF = microfarads, pF = picofarads.

Symbol No.	Part No.	Description
Amp P. C. Board		
Transistors		
Q103	48S43525F02	2SC1815-Y
or	48S44578J01	2SC945L-P
Q104	48S43525F02	2SC1815-Y
or	48S44578J01	2SC945L-P
Q105	48T51118F01	2SA1015-Y
Q106	48T51118F01	2SA1015-Y
Q111	48S43525F02	2SC1815-Y
or	48S44578J01	2SC945L-P
Q112	48S43525F02	2SC1815-Y
or	48S44578J01	2SC945L-P
Q801	48S43525F02	2SC1815-Y
or	48S44578J01	2SC945L-P
Q802	48S43525F02	2SC1815-Y
or	48S44578J01	2SC945L-P
Q803	48S43525F02	2SC1815-Y
or	48S44578J01	2SC945L-P
Q804	48T60721F01	2SB605-LA
Q805	48T60721F01	2SB605-LA
Diodes		
D101	48T43189F01	1S1555
D102	48T43189F01	1S1555
D103	48T43189F01	1S1555
D104	48T43189F01	1S1555
D105	48T43189F01	1S1555
D106	48T43189F01	1S1555
D107	48T43189F01	1S1555
D108	48T43189F01	1S1555
D109	48T43189F01	1S1555
D110	48T55186F01	GP10D
D111	48S40870U02	30D1FE
D801	48T43189F01	1S1555
D803	48T58593F01	GFD10E
D806	48S40870U02	30D1FE
D807	48T55186F01	GP10D
D809	48S134816	1S1555
ZD802	48T52739F33	Zener HZ5C-3

Symbol No.	Part No.	Description
Coils and Thermistor		
L101	24T51105F02	Coil, Choke 2μH
L102	24T51105F02	Coil, Choke 2μH
L103	25T58607F01	Coil, Choke, 4A
L104	25T58607F01	Coil, Choke, 4A
L105	25C40894G11	Choke, Trans
L106	25C40894G11	Choke, Trans
L801	25T58599F01	Trans, Choke Single
T801	25T58598F01	Trans, Cont. Main
TH801	48T60670F01	Thermistor, 20k ohm
Relay		
RL101	80T58608F01	G4Z-2282P-12V
Capacitors		
C101	23T44501P03	Electrolytic 0.33μF 50V
C102	23T44501P03	Electrolytic 0.33μF 50V
C103	08S40805F07	Ceramic 1000pF
C104	08S40805F07	Ceramic 1000pF
C105	23S40657F29	Electrolytic 2.2μF 50V
C106	23S40657F29	Electrolytic 2.2μF 50V
C107	23S40657F14	Electrolytic 100μF 16V
C108	23S40657F14	Electrolytic 100μF 16V
C109	21S40655F17	Ceramic 33pF
C110	21S40655F17	Ceramic 33pF
C111	23S40657F29	Electrolytic 2.2μF 50V
C112	23S40657F29	Electrolytic 2.2μF 50V
C113	21S40655F30	Ceramic 470pF
C114	21S40655F30	Ceramic 470pF
C115	21S40655F30	Ceramic 470pF
C116	21S40655F30	Ceramic 470pF
C117	08T57705F75	Mylar 0.047μF
C118	08T57705F75	Mylar 0.047μF
C119	08T57705F75	Mylar 0.047μF
C120	08T57705F75	Mylar 0.047μF
C121	23S40657F28	Electrolytic 1μF 50V
C122	23S40657F09	Electrolytic 220μF 10V
C123	23T58605F01	Electrolytic 100μF 35V
C124	23T58605F01	Electrolytic 100μF 35V
C125	23T58606F01	Electrolytic 3300μF 35V

Symbol No.	Part No.	Description
C126	23T58606F01	Electrolytic 3300μF 35V
C127	08S40805F22	Ceramic 0.047μF
C128	23B44780P05	Electrolytic 470μF 16V
C801	23S40657F14	Electrolytic 100μF 16V
C802	23S40657F10	Electrolytic 10μF 16V
C803	23T58592F01	Electrolytic 2200μF 25V
C804	08T58616F01	Mylar 0.022μF 250V
C805	08T57298F01	Ceramic 0.1μF
C806	23S40657F14	Electrolytic 100μF 16V
C807	08T57298F01	Ceramic 0.1μF
Resistors		
VR101	18C41732G10	Variable 470 ohm
VR102	18C41732G10	Variable 470 ohm
R101	06S44593P91	12k ohm 1/4W
R102	06S44593P91	12k ohm 1/4W
R103	06S44593P73	2.2k ohm 1/4W
R104	06S44593P73	2.2k ohm 1/4W
R105	06S44594P06	47k ohm 1/4W
R106	06S44594P06	47k ohm 1/4W
R107	06S44593P72	2k ohm 1/4W
R108	06S44593P72	2k ohm 1/4W
R109	06S44593P69	1.5k ohm 1/4W
R110	06S44593P69	1.5k ohm 1/4W
R111	06S44593P63	820 ohm 1/4W
R112	06S44593P63	820 ohm 1/4W
R126	06C44652G26	10 ohm (Metal) 1W
R127	06C44652G26	10 ohm (Metal) 1W
R128	06C44652G26	10 ohm (Metal) 1W
R129	06S44593P89	10k ohm 1/4W
R130	06S44594P02	33k ohm 1/4W
R131	06S44593P97	22k ohm 1/4W
R132	06C44652G23	150 ohm (Metal) 1W
R801	06S44593P41	100 ohm 1/4W
R802	06S44594P14	100k ohm 1/4W
R803	06S44593P73	2.2k ohm 1/4W
R804	06S40150T65	1k ohm 1/4W
R805	06S44593P80	4.3k ohm 1/4W
R806	06S44593P07	3.9 ohm 1/4W
R807	06S44593P89	10k ohm 1/4W
R808	06S44593P73	2.2k ohm 1/4W
R809	06C43205J27	1k ohm (OMF) 1/2W
R810	06C44652G50	10 ohm (OMF) 3W
R811	06C44652G50	10 ohm (OMF) 3W
R812	06C43205J27	1k ohm (OMF) 1/2W
R813	06C43205J27	1k ohm (OMF) 1/2W
R814	06C44652G50	10 ohm (OMF) 3W
R815	06S44593P73	2.2k ohm 1/4W
Miscellaneous Parts		
IC101	51T58602F01	μPC1225H
IC102	51T58602F01	μPC1225H
Q101	48S43525F02	2SC1815-Y
or	48S44578J01	2SC945L-P
Q102	48S43525F02	2SC1815-Y
or	48A44578J01	2SC945L-P
Q107	48T57132F03	2SC3181-O,R
Q108	48T57132F03	2SC3181-O,R
Q109	48T57131F03	2SA1264-O,R
Q110	48T57131F03	2SA1264-O,R
Q806	48T58595F01	2SB829
Q807	48T58595F01	2SB829
D804	48T43363F01	5CH2M
D805	48T43364F01	5EH2M
E102	01D45255F18	Assy., Output Connector
E801	30T40438U09	Assy., Lead, Ground
E802	30T58633F01	Assy., Lead, Battery
E803	30T58634F01	Assy., Lead, Ignition
F001	65T58596F05	Fuse, Auto 15A
F002	65T58596F01	Fuse, Auto 3A
F003	65T58596F01	Fuse, Auto 3A
J101	09T58603F01	Socket, DIN 8P
LD808	48T58601F01	LED SLP151B (RED)
L001	25T60908F01	Coil, Choke SN5-400

Exploded View

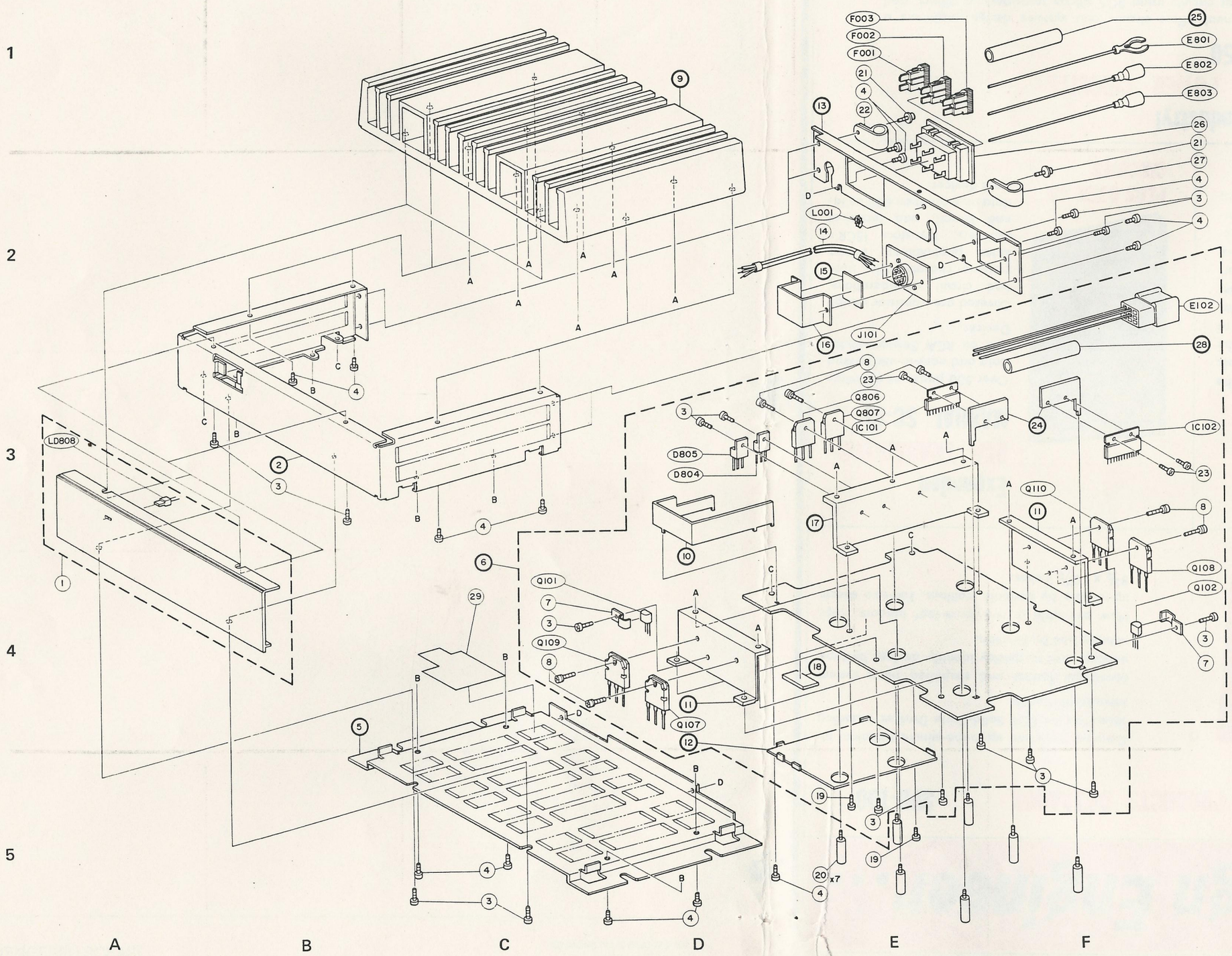

Mechanical Parts List

Symbol No.	Part No.	Description
		General Assembly Parts
1	01V61400F13	Assy., Front Panel
2	*	Chassis, Main
3	03S43997P76	Screw, Bind (M3x6)
4	03S44205G38	Screw, Bind (M3x6)
5	*	Chassis, Bottom
6	*	Assy., Amp P.C.B.
7	07R51146F01	Support, Transistor
8	03C40014G24	Screw, w/Washer (M3x10)
9	*	Heat Sink (Main)
10	*	Plate, Earth
11	*	Heat Sink, (TR)
12	*	Plate, Shield
13	*	Cover, Rear
14	30T60253F01	Wire, Shield
15	*	Insulator, Cover
16	*	Bracket, DIN
17	*	Heat Sink (DD)
18	*	Cushion, Rubber
19	03S44205G55	Screw, Pan (M3x6)
20	03A58724F01	Screw, Special (M4)
21	03S40036U02	Screw, w/Washer (M3x8)
22	42B41424G04	Clamp, Cord
23	03S40012G48	Screw, Pan (M3x6)
24	*	Heat Sink (IC101, 102)
25	*	Tube, Vinyl (60 mm)
26	09T58597F01	Holder, Auto Fuse
27	42B41424G02	Clamp, Cord
28	*	Tube, Vinyl (60 mm)
29	14A60975F01	Insulator, Cover

* not supplied