ALPINE SERVICE MANUAL

11-Band Graphic Equalizer

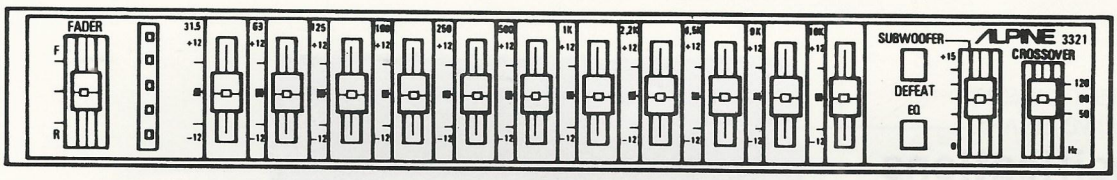

3321

Contents

Specifications 2
Parts Locations 3
Block Diagram 4
Schematic diagram ..... 5 to 8
Parts Layout on P.C.Boards and Wiring Diagram ..... 9 to 11
Electrical Parts List ..... 12 to 14
Exploded View (Cabinet) ..... 15 to 16
Cabinet Assembly Parts List 17
Semi-Conductor Lead Identifications ..... 18 to 21
Packing Method View 22
Packing Assembly Parts List 22

Specifications

Power Supply	DC 14.4V (11～16V)
Total Hamonic Distortion	0.04%
Input Sensitivity / Impedance	0.5 ± 200mV / 9kohm
Output Impedance	1kohm
Frequency Response	30Hz to 40kHz
Channel Crosstalk Attenuation	64dB
Frequency Shaping Equalizer Controls	Boost: 12 + 3dB, 12 − 6dB Cut: −12 + 3dB, −12 − 6dB
Equalization Frequency	31.5Hz, 63Hz, 125Hz, 190Hz, 250Hz 500Hz, 1kHz, 2.2kHz, 4.5kHz, 9kHz, 18kHz
Subwoofer Frequency Response	50, 80, 120 ± 20Hz
Subwoofer Control Effect	15 ± 3dB
Signal to Noise Ratio (IHF-A)	94dB
Current Drain	300mA
Fader Control Effect	40dB
Channel Unbalance	0 ± 3dB
Semiconductors	19 IC's, 31 Transistors, 13 Diodes 5 Zener Diodes, 20 LED's
Dimensions	Nose Dimensions: 178(W) × 25(H) × 16(D)mm Chassis Dimensions: 178(W) × 25(H) × 115(D)mm
Weight	0.7kg

NOTE : Due to continuing product improvement, spcifications and design subject to change without notice.

Parts Locations

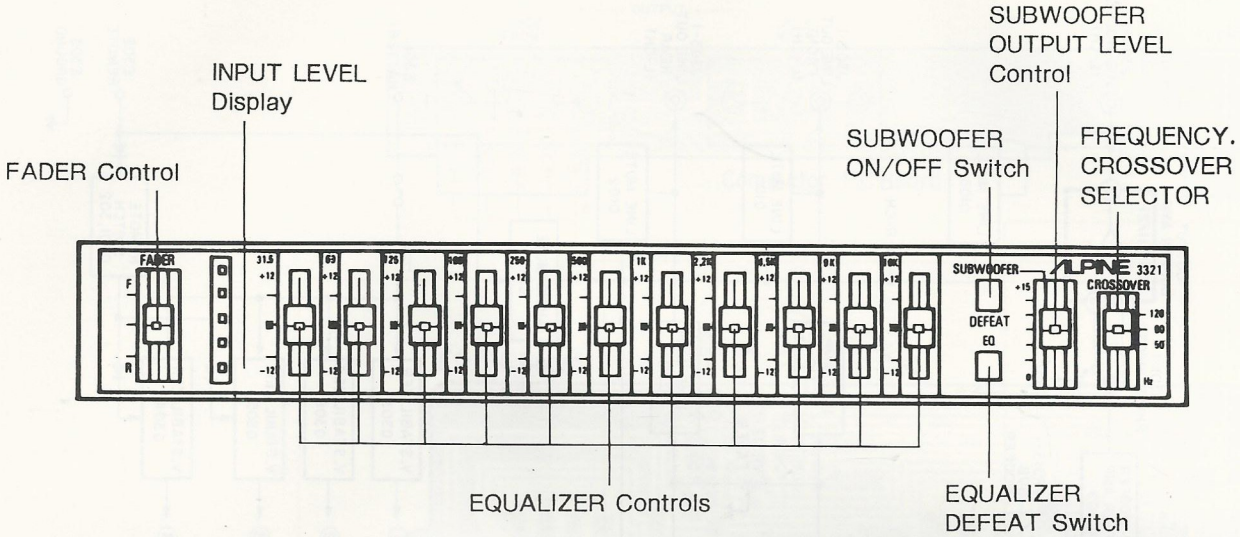

Figure 1

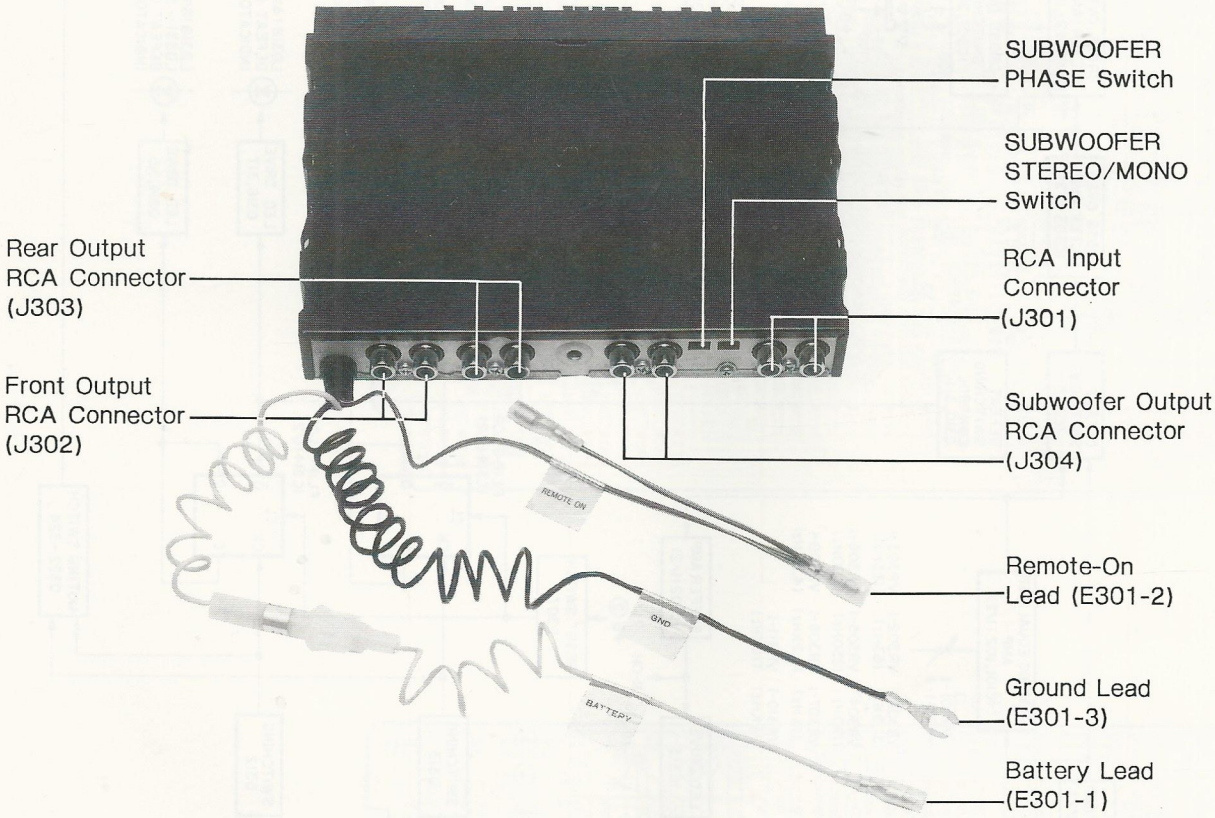

Figure 2

Block Diagram

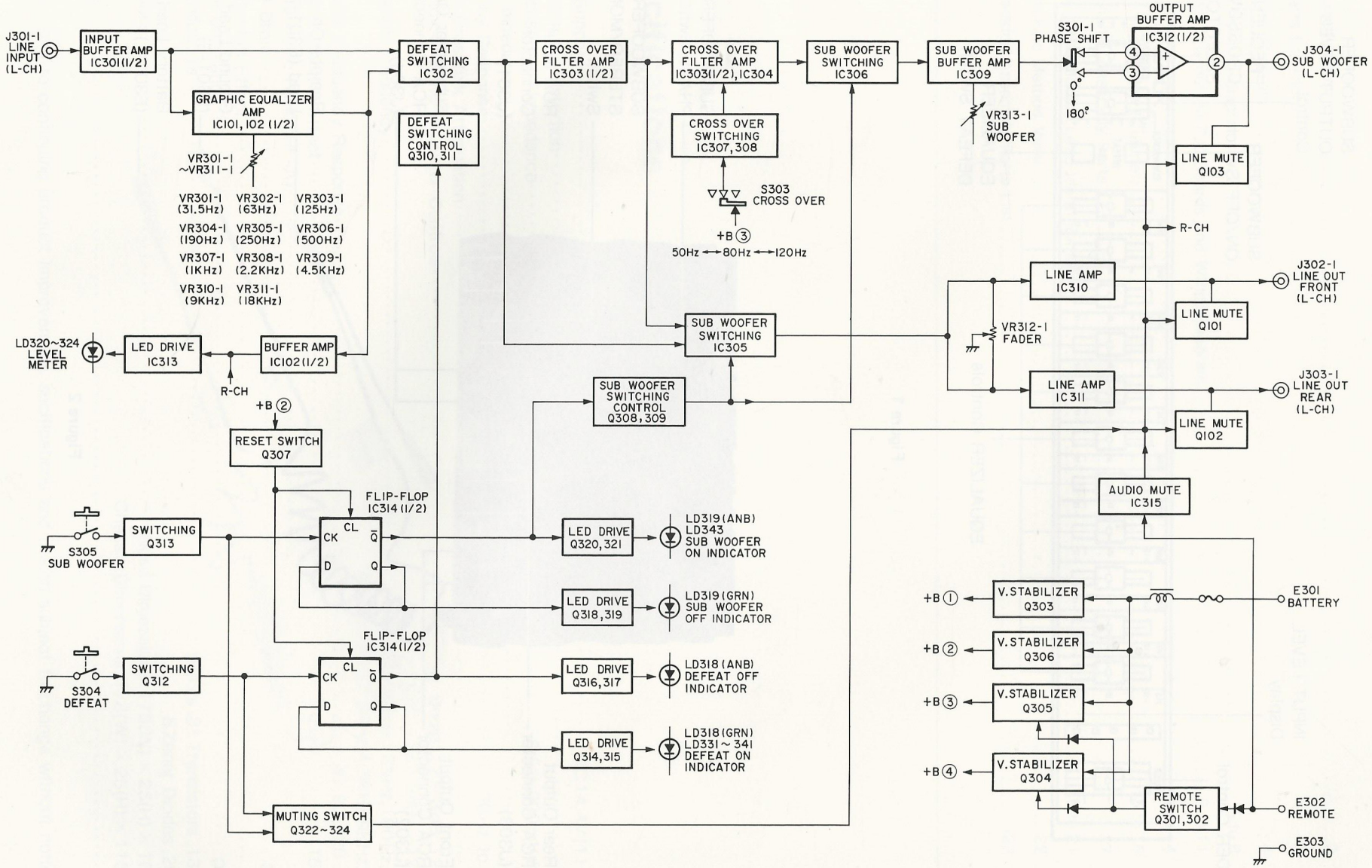

Schematic Diagram

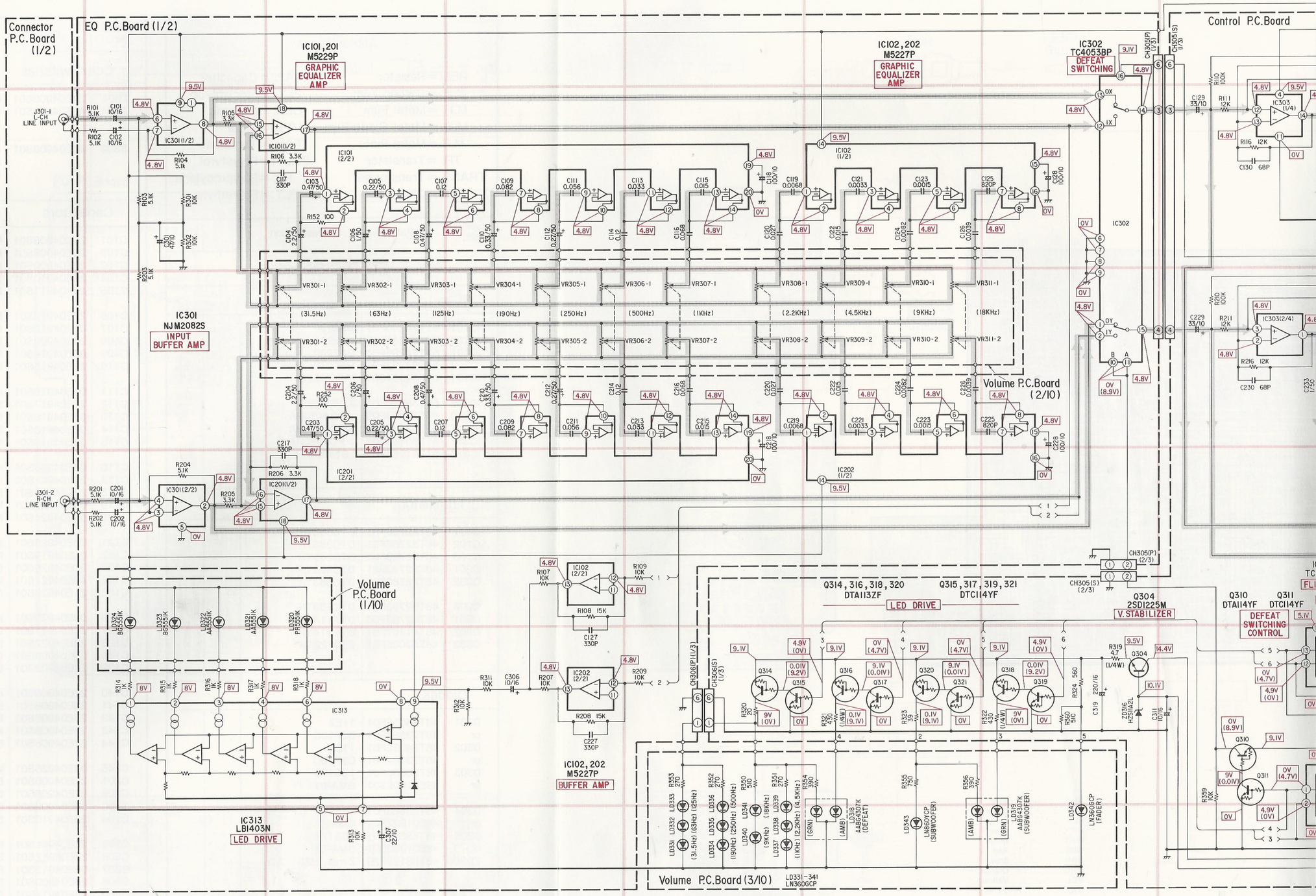

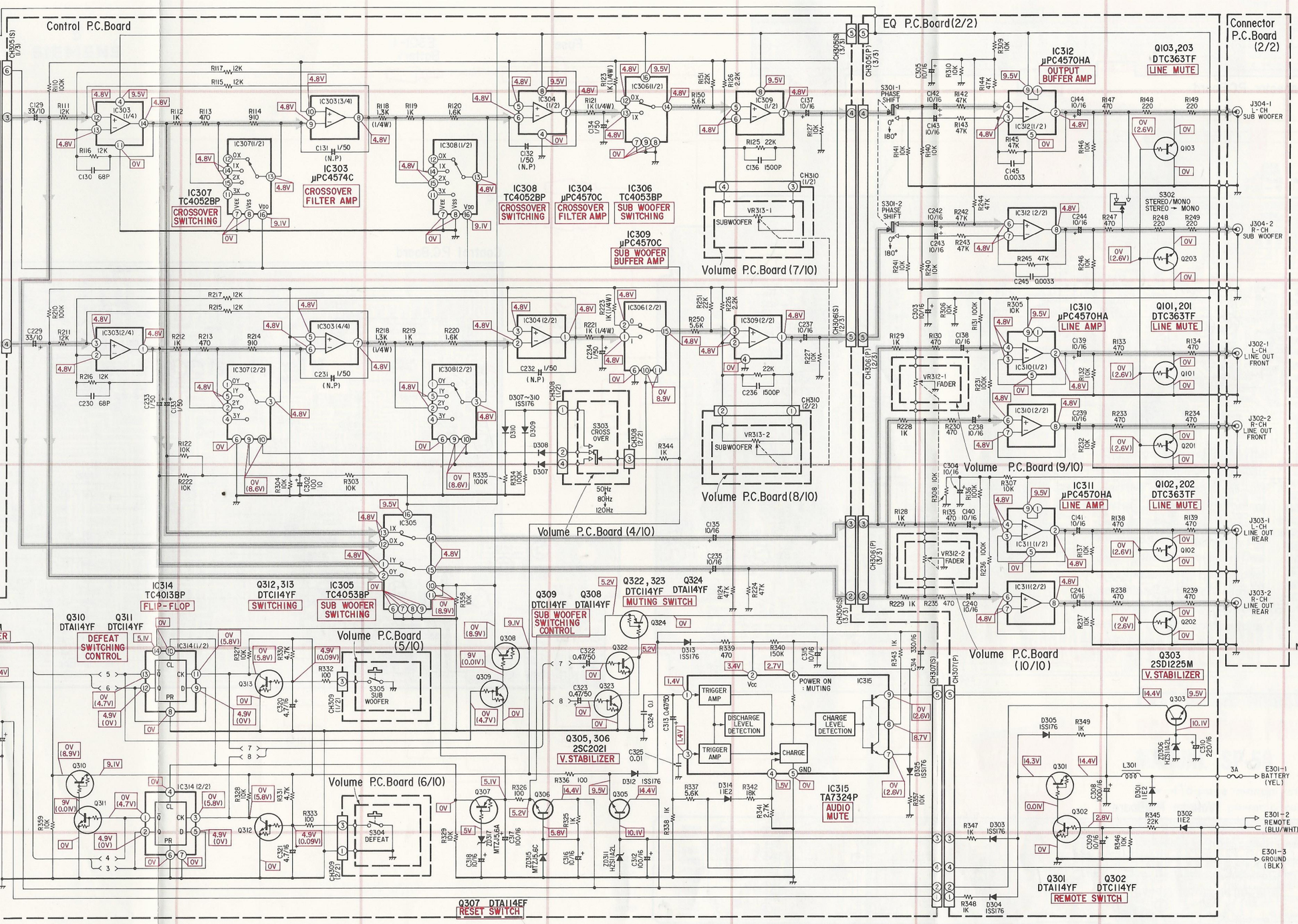

NOTES:

1. All resistance values are in ohms K=1,000 ohm
2. All capacitance values are in microfarads $P=\frac{1}{1,000,000}\ \mu F$
3. Measurement Condition
   - Power Supply Voltage : DC14.4V
   - Measurement meter : Digital voltmeter
   - Measurement reference : To ground
   - Measurement Conditions
     : No signal input, EQ Flat, Defeat on.

Parts Layout on P.C. Boards and Wiring Diagram

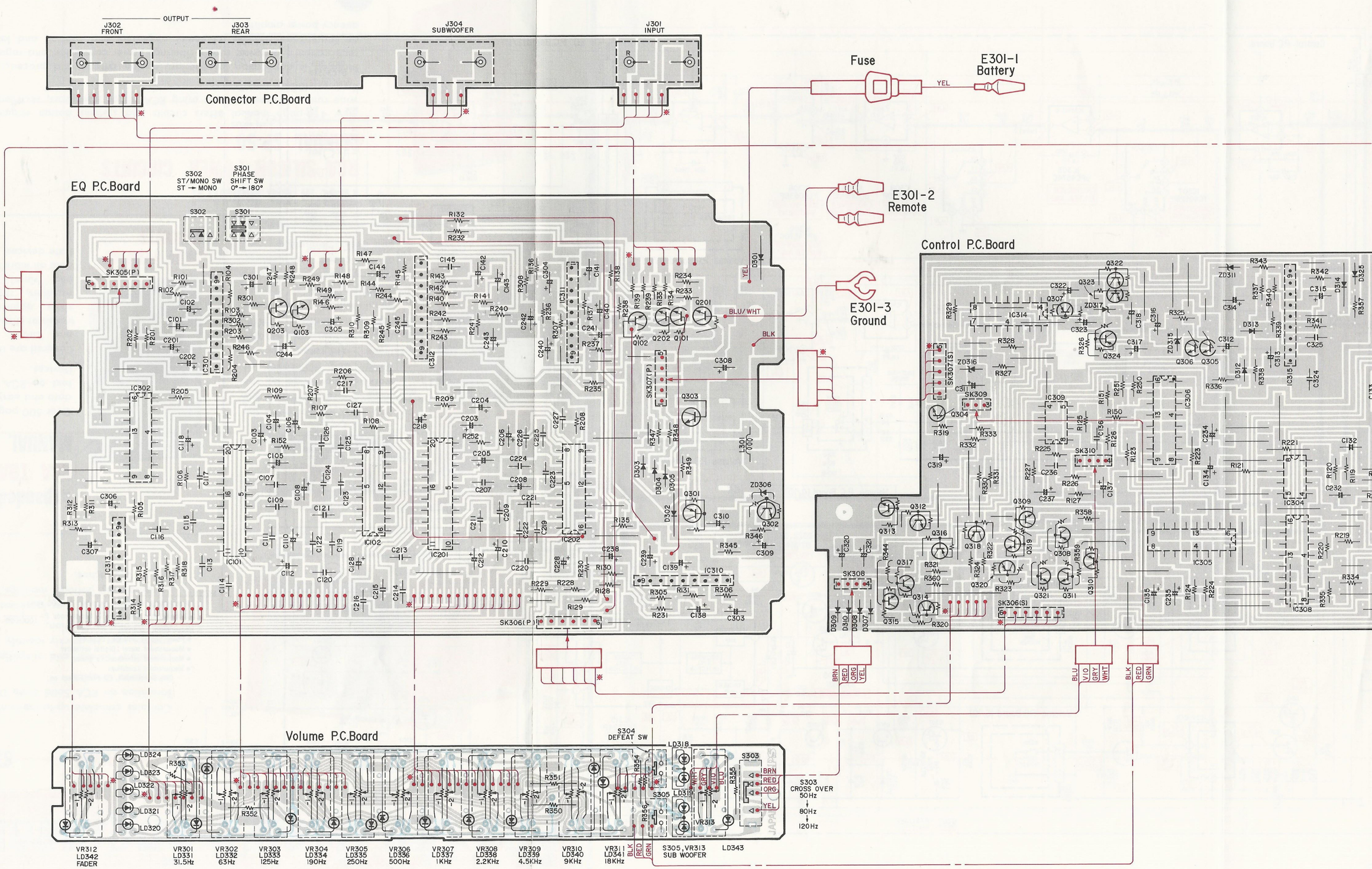

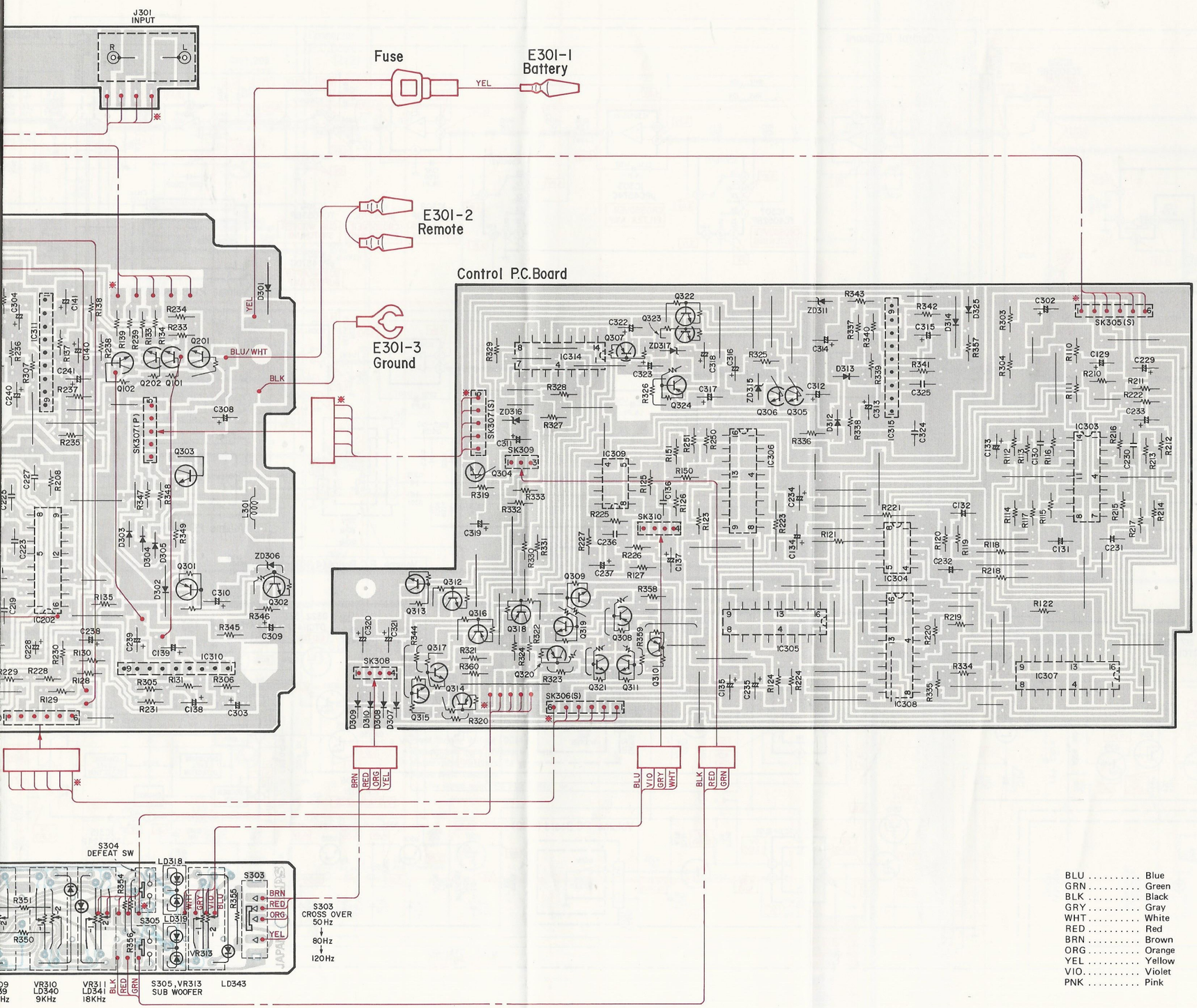

BLU ..... Blue
GRN ..... Green
BLK ..... Black
GRY ..... Gray
WHT ..... White
RED ..... Red
BRN ..... Brown
ORG ..... Orange
YEL ..... Yellow
VIO ..... Violet
PNK ..... Pink

3321

Electrica

RES. = Res
C.F. = Car
M.F. = Met
M.O. = Met
M.P. = Met
TR. = Tra
TRANS. = Tra
CP. = Chi

Symbol No.	Pa
IC's	
IC101	51T74
IC102	51T84
IC201	51T74
IC202	51T84
IC301	51E04
IC302	51T68
IC310	51T83
IC311	51T83
IC312	51T83
IC313	51T61
Transisto	
Q101	48T82
Q102	48T82
Q103	48T82
Q201	48T82
Q202	48T82
Q203	48T82
Q301	48T82
Q302	48T61
Q303	48T63
Diodes	
D301	48T84
or	48T73
D302	48T84
or	48T73
D303	48T58
or	48E01
D304	48T58
or	48E01
D305	48T58
or	48E01
ZD306	48T83

Electrical Parts List

Resistors: Carbon resistors under ¼ watts are not mentioned in the parts list, please confirm them by schematic diagram.
uF = microfarads, pF = picofarads

Abbreviations

RES. = Resistor	CAP. = Capacitor
C.F. = Carbon Film	ELY. = Electrolytic
M.F. = Metal Film	CER. = Ceramic
M.O. = Metal Oxide Film	MYL. = Mylar
M.P. = Metal Plate	TAN. = Tantalum
TR. = Transistor	POLY. = Polystyrol
TRANS. = Transformer	PP. = Polypropylene
CP. = Chip	PLT. = Polyethylene

Symbol No.	Part No.	Description		
EQ P.C.Board				
IC's				
IC101	51T74296F01	M5229P		
IC102	51T84232F01	M5227P		
IC201	51T74296F01	M5229P		
IC202	51T84232F01	M5227P		
IC301	51E04904S01	NJM2082S		
IC302	51T68388F01	TC4053BP		
IC310	51T83403F03	μPC4570HA		
IC311	51T83403F03	μPC4570HA		
IC312	51T83403F03	μPC4570HA		
IC313	51T61284F01	LB1403N		
Transistors				
Q101	48T82763F31	DTC363TF		
Q102	48T82763F31	DTC363TF		
Q103	48T82763F31	DTC363TF		
Q201	48T82763F31	DTC363TF		
Q202	48T82763F31	DTC363TF		
Q203	48T82763F31	DTC363TF		
Q301	48T82762F06	DTA114YF		
Q302	48T61307F01	DTC114YF		
Q303	48T63085F01	2SD1225M		
Diodes				
D301	48T84052F01	11E2		
or	48T73984F01	DSF10C		
D302	48T84052F01	11E2		
or	48T73984F01	DSF10C		
D303	48T58583F01	1SS176		
or	48E01902S01	GMA-01		
D304	48T58583F01	1SS176		
or	48E01902S01	GMA-01		
D305	48T58583F01	1SS176		
or	48E01902S01	GMA-01		
ZD306	48T83129F29	Zener, HZS11A2L		

Symbol No.	Part No.	Description		
Coil/Switches				
L301	24E04905S01	Choke Coil		
S301	40E04906S01	Slide, SS-215-FC-M022B (PHASE SHIFT)		
S302	40E04906S01	Slide, SS-215-FC-M022B (STEREO/MONO)		
Capacitors				
C101	23E04908S01	ELY., 10μF/16V		
C102	23E04908S01	ELY., 10μF/16V		
C103	23E04909S01	ELY., 0.47μF/50V		
C104	23E04910S01	ELY., 2.2μF/50V		
C105	23E04911S01	ELY., 0.22μF/50V		
C106	23E04912S01	ELY., 1μF/50V		
C107	08E04913S01	Film, 0.12μF		
C108	23E04909S01	ELY., 0.47μF/50V		
C109	08E04914S01	Film, 0.082μF		
C110	23E04915S01	ELY., 0.33μF/50V		
C111	08E04916S01	Film, 0.056μF		
C112	23E04917S01	ELY., 0.27μF/50V		
C113	08E04918S01	Film, 0.033μF		
C114	08E04913S01	Film, 0.12μF		
C115	08E04919S01	Film, 0.015μF		
C116	08E04920S01	Film, 0.068μF		
C117	21E04921S01	CER., 330pF		
C118	23E04922S01	ELY., 100μF/10V		
C119	08E04923S01	MYL., 6800pF		
C120	08E04924S01	Film, 0.027μF		
C121	08E04925S01	MYL., 3300pF		
C122	08E04919S01	Film, 0.015μF		
C123	08E04926S01	MYL., 1500pF		
C124	08E04927S01	MYL., 8200pF		
C125	21E04928S01	CER., 820pF		
C126	08E04929S01	MYL., 3900pF		
C127	21E04921S01	CER., 330pF		
C128	23E04922S01	ELY., 100μF/10V		
C138	23E04908S01	ELY., 10μF/16V		
C139	23E04908S01	ELY., 10μF/16V		
C140	23E04908S01	ELY., 10μF/16V		
C141	23E04908S01	ELY., 10μF/16V		
C142	23E04908S01	ELY., 10μF/16V		
C143	23E04908S01	ELY., 10μF/16V		
C144	23E04908S01	ELY., 10μF/16V		
C145	08E04925S01	MYL., 3300pF		
C201	23E04908S01	ELY., 10μF/16V		
C202	23E04908S01	ELY., 10μF/16V		
C203	23E04909S01	ELY., 0.47μF/50V		
C204	23E04910S01	ELY., 2.2μF/50V		
C205	23E04911S01	ELY., 0.22μF/50V		
C206	23E04912S01	ELY., 1μF/50V		
C207	08E04913S01	Film, 0.12μF		
C208	23E04909S01	ELY., 0.47μF/50V		
C209	08E04914S01	Film, 0.082μF		

Symbol No.	Part No.	Description		
C210	23E04915S01	ELY., 0.33μF/50V		
C211	08E04916S01	Film, 0.056μF		
C212	23E04917S01	ELY., 0.27μF/50V		
C213	08E04918S01	Film, 0.033μF		
C214	08E04913S01	Film, 0.12μF		
C215	08E04919S01	Film, 0.015μF		
C216	08E04920S01	Film, 0.068μF		
C217	21E04921S01	CER., 330pF		
C218	23E04907S01	ELY., 100μF/10V		
C219	08E04923S01	MYL., 6800pF		
C220	08E04924S01	Film, 0.027μF		
C221	08E04925S01	MYL., 3300pF		
C222	08E04919S01	Film, 0.015μF		
C223	08E04926S01	MYL., 1500pF		
C224	08E04927S01	MYL., 8200pF		
C225	21E04928S01	CER., 820pF		
C226	08E04929S01	MYL., 3900pF		
C227	21E04921S01	CER., 330pF		
C228	23E04907S01	ELY., 100μF/10V		
C238	23E04908S01	ELY., 10μF/16V		
C239	23E04908S01	ELY., 10μF/16V		
C240	23E04908S01	ELY., 10μF/16V		
C241	23E04908S01	ELY., 10μF/16V		
C242	23E04908S01	ELY., 10μF/16V		
C243	23E04908S01	ELY., 10μF/16V		
C244	23E04908S01	ELY., 10μF/16V		
C245	08E04925S01	MYL., 3300pF		
C301	23E04930S01	ELY., 47μF/10V		
C303	23E04908S01	ELY., 10μF/16V		
C304	23E04908S01	ELY., 10μF/16V		
C305	23E04908S01	ELY., 10μF/16V		
C306	23E04908S01	ELY., 10μF/16V		
C307	23E04931S01	ELY., 22μF/10V		
C308	23E04932S01	ELY., 1000μF/16V		
C309	23E04908S01	ELY., 10μF/16V		
C310	23E04933S01	ELY., 220μF/16V		

Control P.C.Board

IC's

Symbol No.	Part No.	Description		
IC303	51E04934S01	μPC4574C		
IC304	51T83403F01	μPC4570C		
IC305	51T68388F01	TC4053BP		
IC306	51T68388F01	TC4053BP		
IC307	51T68387F01	TC4052BP		
IC308	51T68387F01	TC4052BP		
IC309	51T83403F01	μPC4570C		
IC314	51T40391U01	TC4013BP		
IC315	51S42616F01	TA7324P		

Transistors

Symbol No.	Part No.	Description		
Q304	48T63085F01	2SD1225M		
Q305	48T51091F01	2SC2021		
Q306	48T51091F01	2SC2021		
Q307	48T82762F04	DTA144EF		
Q308	48T82762F06	DTA114YF		
Q309	48T61307F01	DTC114YF		
Q310	48T82762F06	DTA114YF		
Q311	48T61307F01	DTC114YF		
Q312	48T61307F01	DTC114YF		
Q313	48T61307F01	DTC114YF		
Q314	48T82762F13	DTA113ZF		
Q315	48T61307F01	DTC114YF		
Q316	48T82762F13	DTA113ZF		
Q317	48T61307F01	DTC114YF		
Q318	48T82762F13	DTA113ZF		
Q319	48T61307F01	DTC114YF		
Q320	48T82762F13	DTA113ZF		
Q321	48T61307F01	DTC114YF		
Q322	48T61307F01	DTC114YF		
Q323	48T61307F01	DTC114YF		
Q324	48T82762F06	DTA114YF		

Diodes

Symbol No.	Part No.	Description		
D307	48T58583F01	1SS176		
or	48E01902S01	GMA-01		
D308	48T58583F01	1SS176		
or	48E01902S01	GMA-01		
D309	48T58583F01	1SS176		
or	48E01902S01	GMA-01		
D310	48T58583F01	1SS176		
or	48E01902S01	GMA-01		
ZD311	48T83129F29	Zener, HZS11A2L		
D312	48T58583F01	1SS176		
or	48E01902S01	GMA-01		
D313	48T58583F01	1SS176		
or	48E01902S01	GMA-01		
D314	48T84052F01	11E2		
or	48T73984F01	DSF10C		
ZD315	48T68699F12	Zener, MTZJ-5.6C		
ZD316	48T83129F29	Zener, HZS11A2L		
ZD317	48T68699F12	Zener, MTZJ-5.6A		
D325	48T58583F01	1SS176		
or	48E01902S01	GMA-01		

Capacitors

Symbol No.	Part No.	Description		
C129	23E04935S01	ELY., 33μF/10V		
C130	21E04936S01	CER., 68pF		
C131	23E04912S01	ELY., 1μF/50V		
C132	23E04912S01	ELY., 1μF/50V		
C133	23E04912S01	ELY., 1μF/50V		

Symbol No.	Part No.	Description		
C134	23E04912S01	ELY., 1μF/50V		
C135	23E04908S01	ELY., 10μF/16V		
C136	21E04937S01	CER., 1500pF		
C137	23E04908S01	ELY., 10μF/16V		
C229	23E04935S01	ELY., 33μF/10V		
C230	21E04936S01	CER., 68pF		
C231	23E04912S01	ELY., 1μF/50V		
C232	23E04912S01	ELY., 1μF/50V		
C233	23E04912S01	ELY., 1μF/50V		
C234	23E04912S01	ELY., 1μF/50V		
C235	23E04908S01	ELY., 10μF/16V		
C236	21E04937S01	CER., 1500pF		
C237	23E04908S01	ELY., 10μF/16V		
C302	23E04922S01	ELY., 100μF/10V		
C312	23E04938S01	ELY., 100μF/16V		
C313	23E04909S01	ELY., 0.47μF/50V		
C314	23E04939S01	ELY., 330μF/16V		
C315	23E04908S01	ELY., 10μF/16V		
C316	23E04908S01	ELY., 10μF/16V		
C317	23E04938S01	ELY., 100μF/16V		
C318	23E04908S01	ELY., 10μF/16V		
C319	23E04933S01	ELY., 220μF/16V		
C320	23E04940S01	ELY., 4.7μF/16V		
C321	23E04940S01	ELY., 4.7μF/16V		
C322	23E04909S01	ELY., 0.47μF/50V		
C323	23E04909S01	ELY., 0.47μF/50V		
C324	21E04941S01	CER., 0.1μF		
C325	21E04942S01	CER., 0.01μF		

Volume P.C.Board

LED's

LD318	48T72180F03	AABG4307K		
LD319	48T72180F03	AABG4307K		
LD320	48E04943S01	PR5551K		
LD321	48E04944S01	AA5551K		
LD322	48E04944S01	AA5551K		
LD323	48E04945S01	BG5551K		
LD324	48E04945S01	BG5551K		

Symbol No.	Part No.	Description		
Volumes				
LD331	18E04972S01	ASSY., Slide Volume		
LD332				
LD333				
LD334				
LD335				
LD336				
LD337				
LD338				
LD339				
LD340				
LD341				
LD342				
LD343				
R350				
R351				
R352				
R353				
R354				
R355				
R356				
VR301				
VR302				
VR303				
VR304				
VR305				
VR306				
VR307				
VR308				
VR309				
VR310				
VR311				
VR312				
VR313				
Switches				
S303	40E04947S01	Slide, SSSS91 (CROSSOVER)		
S304	40E04948S01	Tact, SKHLAD (DEFEAT)		
S305	40E04948S01	Tact, SKHLAD (SUBWOOFER)		

Connector P.C.Board

Connectors

J301	09E04949S01	RCA Pin Jack		
J302	09E04949S01	RCA Pin Jack		
J303	09E04949S01	RCA Pin Jack		
J304	09E04949S01	RCA Pin Jack		

Miscellaneous

E301	01E04950S04	ASSY., Power Cord		
F301	65E04951S01	Fuse, 3A		

Exploded View (Cabinet)

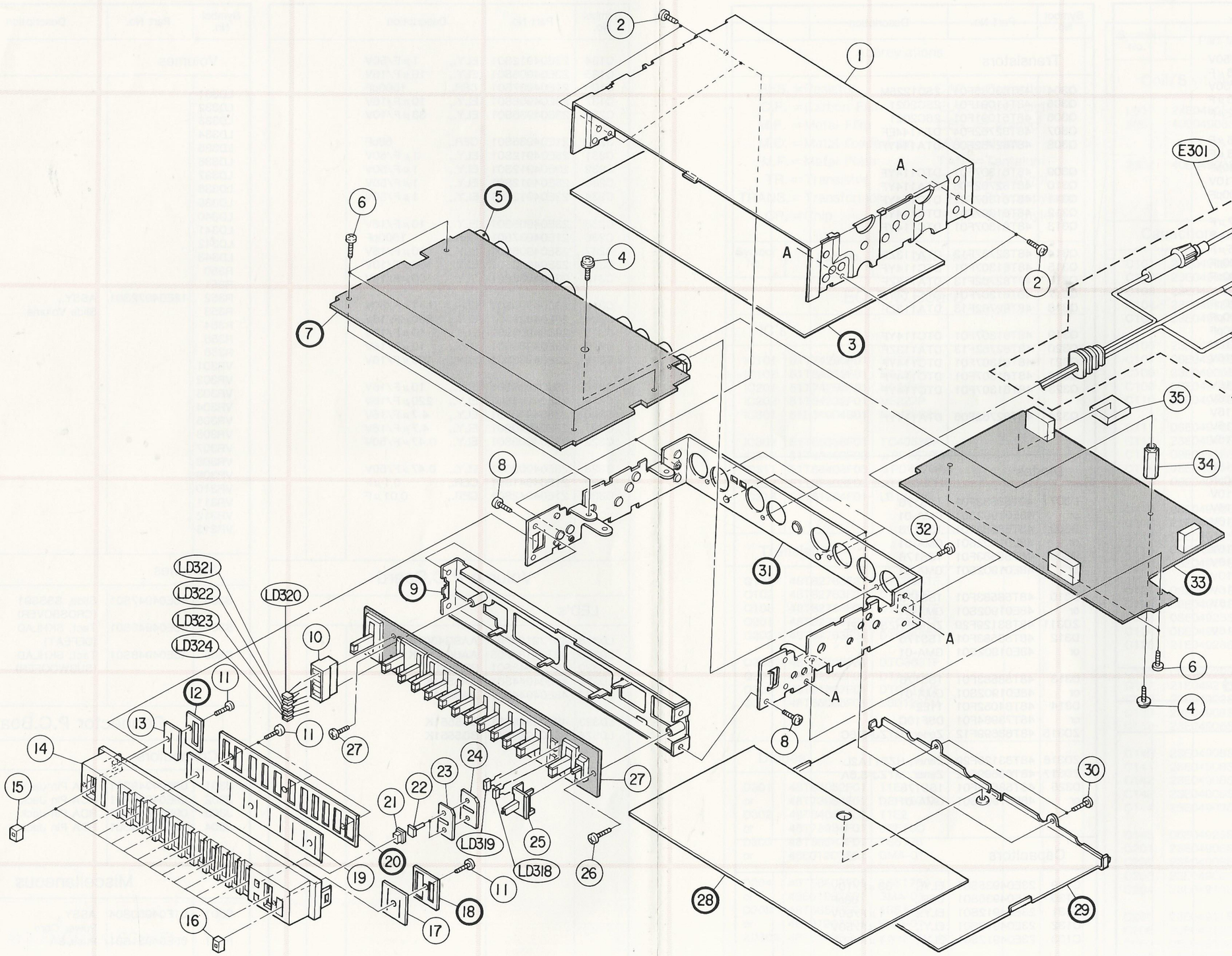

Cabinet Assembly Parts List

Symbol No.	Index	Part No.	Description		
1	1-E	15E04952S01	Cover, Top		
2	1-D	03E04953S01	Screw, Pan(M2.6×5)		
4	2-D	03E04955S01	Screw, Pan(M2.6×5)		
6	2-C	03E04957S01	Screw, Pan(M2.6×6)		
8	3-D	03E04958S01	Screw, Pan(M2.6×5)		
10	4-C	15E04960S01	Cover, LED		
11	5-B	03E04961S01	Screw, Pan(M2×4)		
13	5-B	75E04963S01	Cushion, Volume B		
14	5-A	13E04964S01	ASSY., Nosepiece		
15	5-A	36A66199F01	Knob, Slide		
16	6-B	36A66199F02	Knob, Slide		
17	6-C	75E04965S01	Cushion, Volume C		
19	6-C	75E04967S01	Cushion, Volume A		
21	5-C	36A84547F01	Knob, Base		
22	5-C	36A84548F01	Knob, Push		
23	5-C	75E04969S01	Cushion, Knob Push		
24	5-C	15E05055S01	Guide, Knob Push		
25	5-D	40E04970S01	Knob, SW		
26	6-D	03E04971S01	Screw, Pan(M2.6×6)		
27	5-C	18E04972S01	ASSY., Slide Volume Unit		
30	5-G	03E04975S01	Screw, Pan(M2.6×5)		
32	4-F	03E04977S01	Screw, Pan(M3×8)		
34	3-G	43E04978S01	Spacer		
35	3-G	75E04979S01	Cushion		

NOTE : The parts without part numbers are not supplied.

Semi-Conductor Lead Identifications

M5229P : IC101, 201

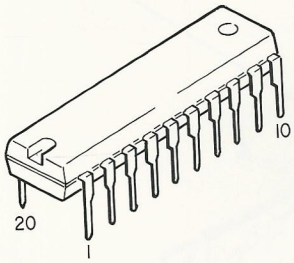

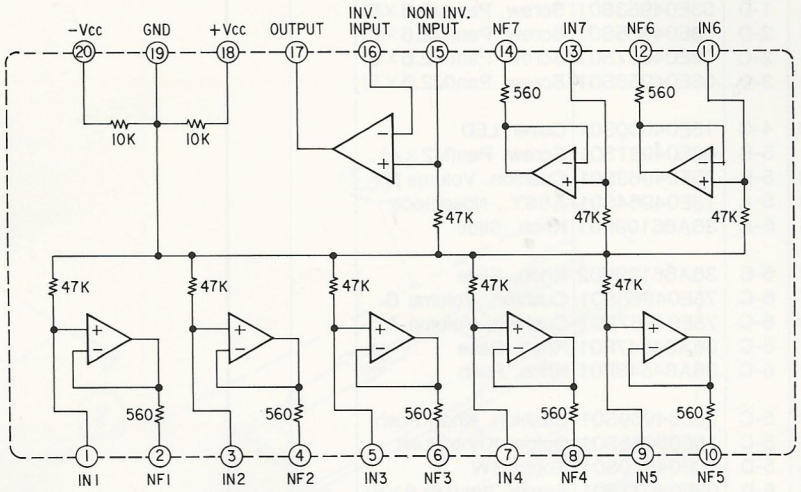

M5227P : IC102, 202

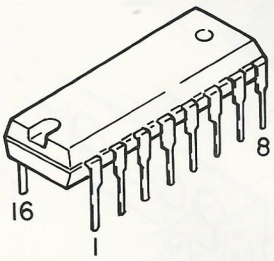

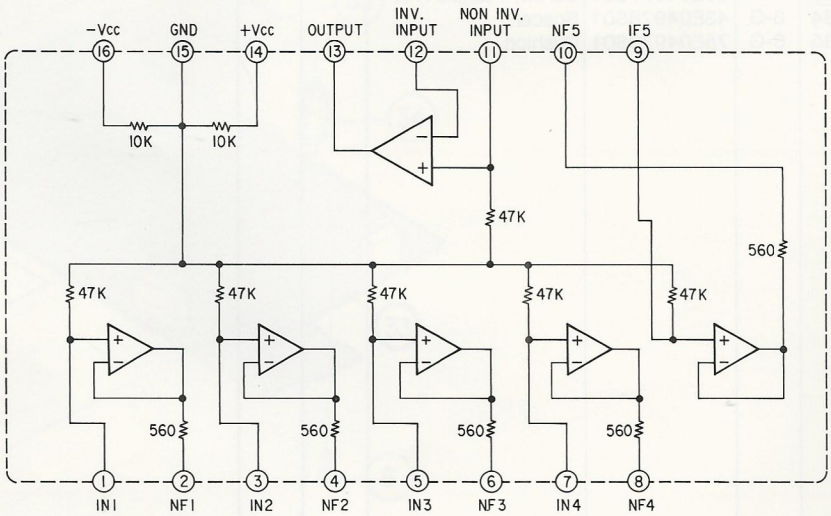

NJM2082S : IC301

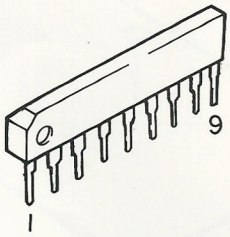

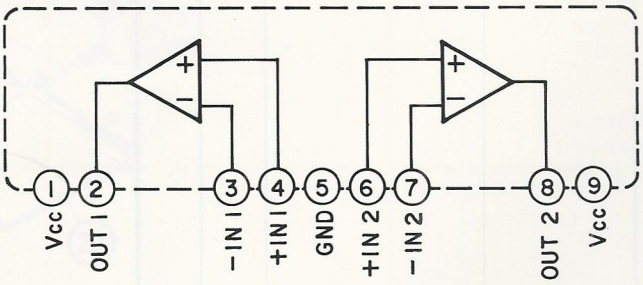

IC4053BP : IC302, 305, 306

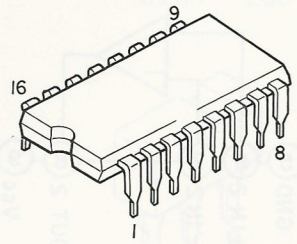

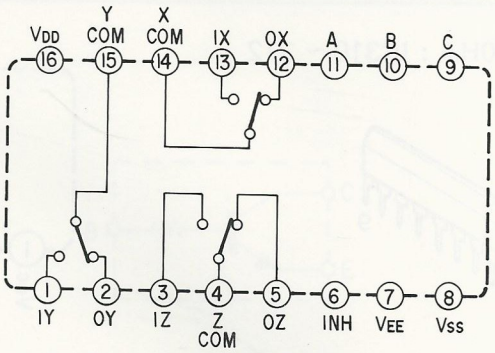

μPC4574C : IC303

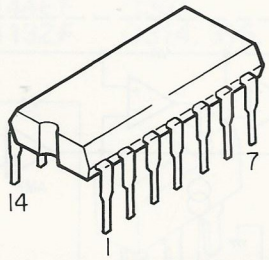

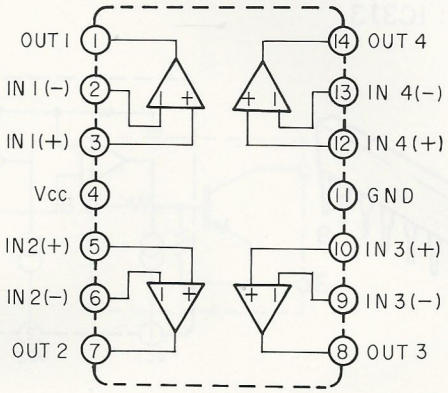

μPC4570C : IC304, 309

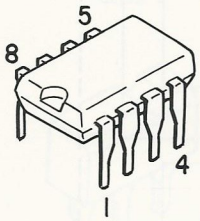

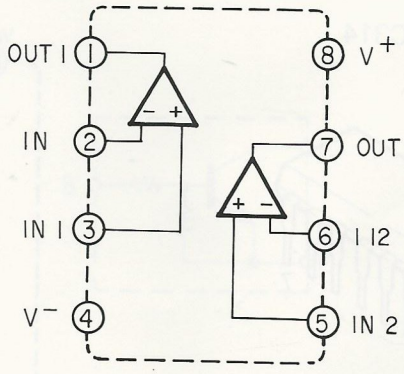

TC4052BP : IC307, 308

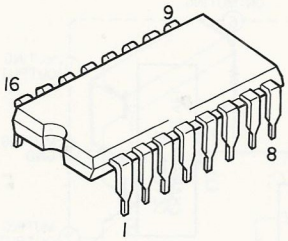

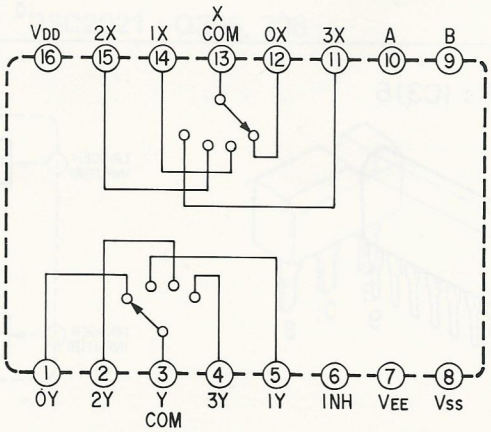

μPC4570HA : IC310 ~ 312

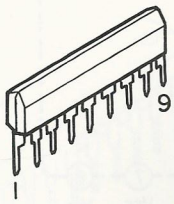

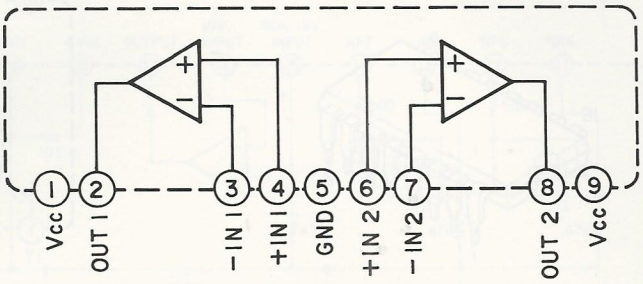

LB1403N : IC313

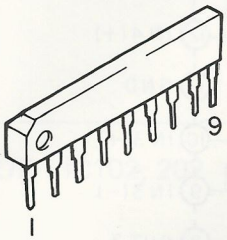

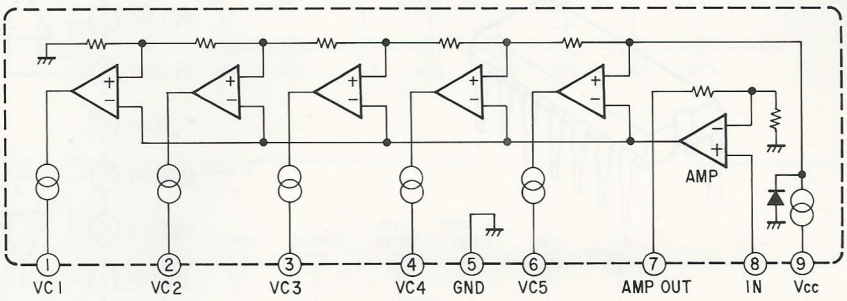

IC4013BP : IC314

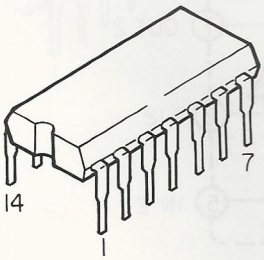

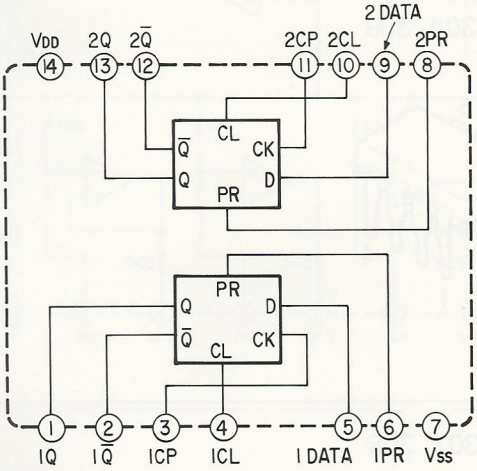

TA7324P : IC315

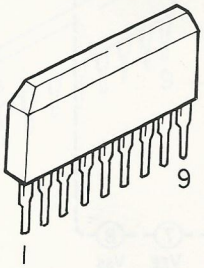

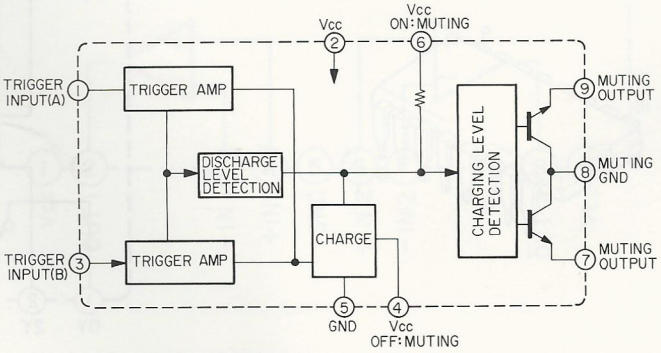

DTC363TF : Q101 ~ 103
Q201 ~ 203

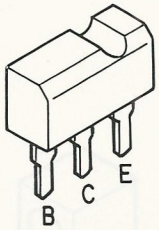

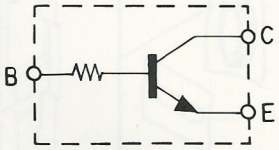

DTA114YF : Q301, 308, 310, 324
DTA144EF : Q307
DTA113ZF : Q314, 316, 318, 320

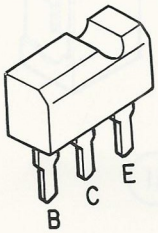

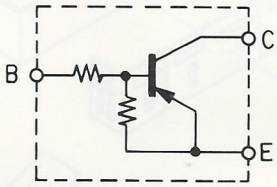

DTC114YF : Q302, 309, 311 ~ 313,
Q315, 317, 319
Q321 ~ 323

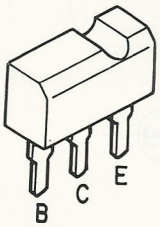

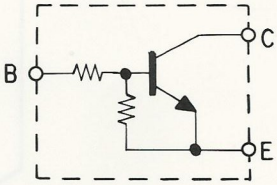

2SD1225M : Q303, 304

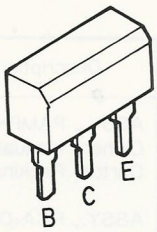

2SC2021 : Q305, 306

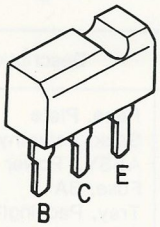

Packing Method View

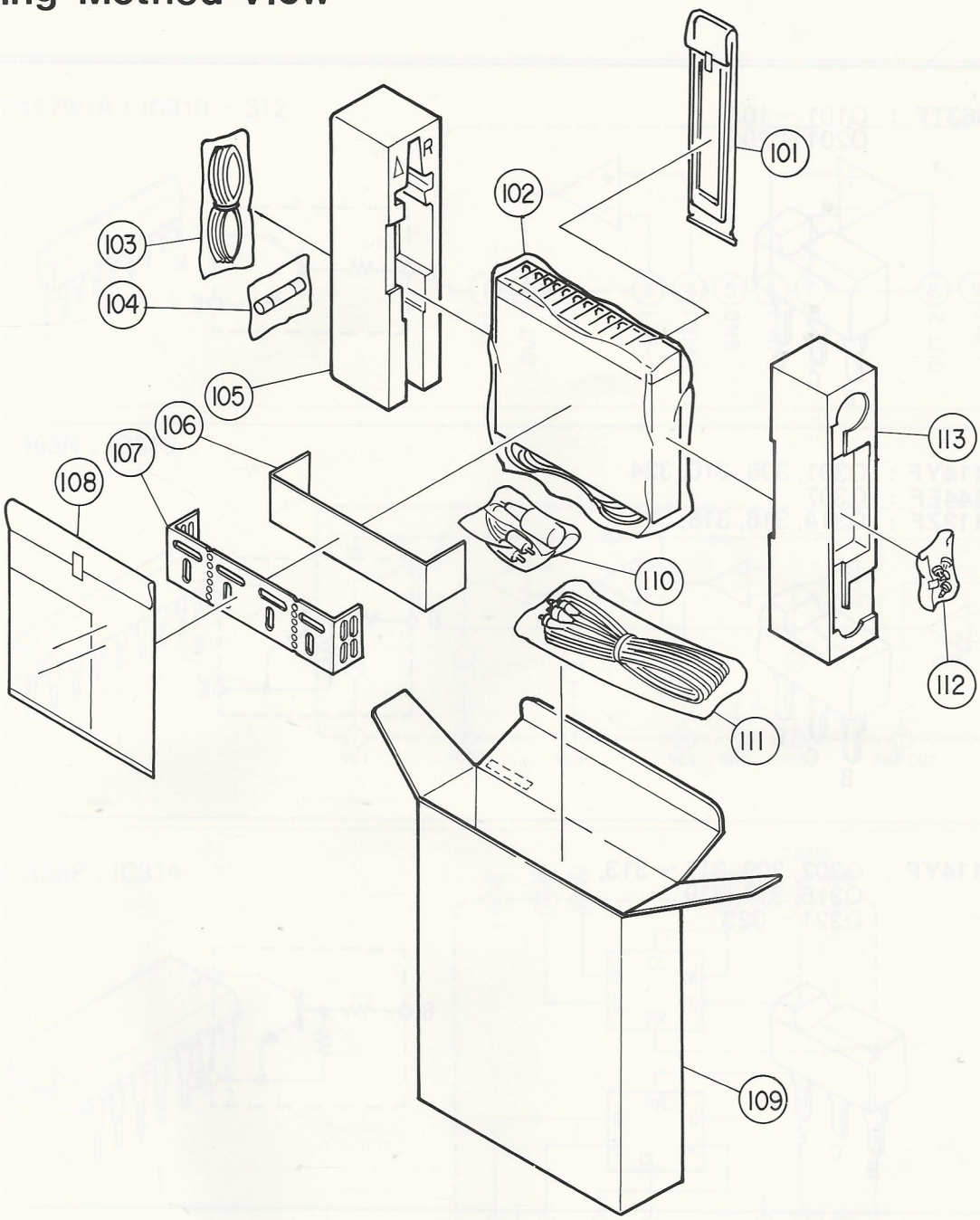

Packing Assembly Parts List

Symbol No.	Part No.	Description		
101	33B72141F01	Face, Plate		
102	56E04980S01	Sack, Polyethylene		
103	01E04950S01	ASSY., Power Cord		
104	65E04951S01	Fuse, 3A		
105	56E04981S01	Tray, Packing(R)		
106	56A65131F01	Pad Sheet		
107	07B52108F04	Bracket"U"Mounting		

Symbol No.	Part No.	Description		
● 108	01E05108S01	ASSY., PAMPH		
■ 108	68T81880F84	Owners Manual		
109	56E04982S01	Carton, Packing		
110	01T94453F01	ASSY., RCA-DIN		
111	01T96094F01	RCA Cable(600)		
112	01E05109S01	ASSY., Kit INS		
113	56E04986S01	Tray, Packing(L)		

● : For North American model only.
■ : For Eurpean model only. Others : Common.