ALPINE SERVICE MANUAL

7-BAND GRAPHIC EQUALIZER WITH 4 AMPLIFIERS

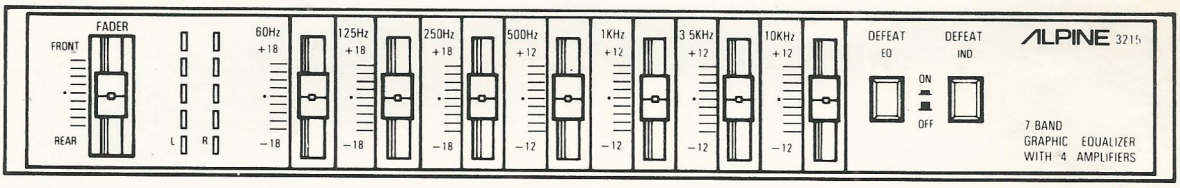

3215

Contents

Specifications 3
Parts Locations and Disassembly Instructions ..... 4 to 6
Block Diagram 7
Parts Layout on P. C. Boards ..... 8 to 10
Schematic Diagram ..... 11 to 12
Wiring Diagram ..... 13 to 14
Electrical Parts List ..... 15 to 17
Mechanical Parts List 18
Exploded View (General) ..... 19 to 20
Packing Method View 21
Packing Parts List 22
Semiconductors Lead Identifications ..... 23 to 25

Specifications

Power Supply	14.4V DC (11.0V to 16.0V allowable)
Grounding System	Negative Type
Zero Signal Current Drain	1.5A
Equalization Range	
(60/125/250 Hz)	±14 dB
(500/1k/3.5k/10 kHz)	±8 dB
Equalization Frequency	60 Hz/125 Hz/250 Hz/500 Hz/1 kHz/3.5 kHz/10 kHz
Frequency Response (−3dB at 1 W)	20 Hz to 20 kHz
Output Noise (Input shorted)	0.6 mV
Input Sensitivity/Impedance	(DIN) 500 mV±1 dB/10 kohms±10%
	(SP) 2V± 1dB/100 ohms ±10%
Channel Separation (at 1kHz)	55 dB
Signal to Noise Ratio (IHF-A)	80 dB
Output Impedance	40 ohms
Semiconductors	11 ICs, 16 Transistors, 10 Diodes, 3 Zener Diodes
Dimensions (W×H×D)	178(W)×25(H)×165(D) mm
Weight	1 kg
Power Output (8% THD)	18W×4
Current Drain	10A

Parts Locations and Disassembly Instructions

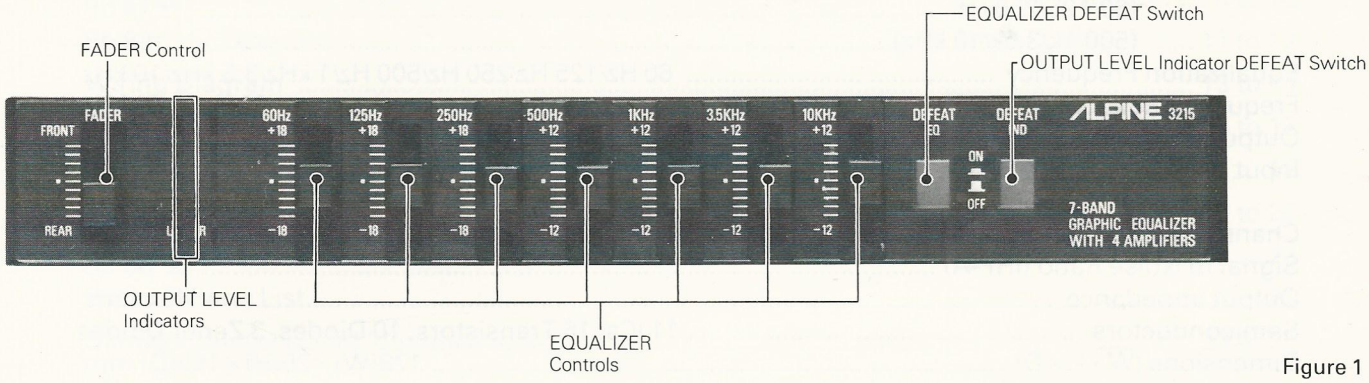

Figure 1

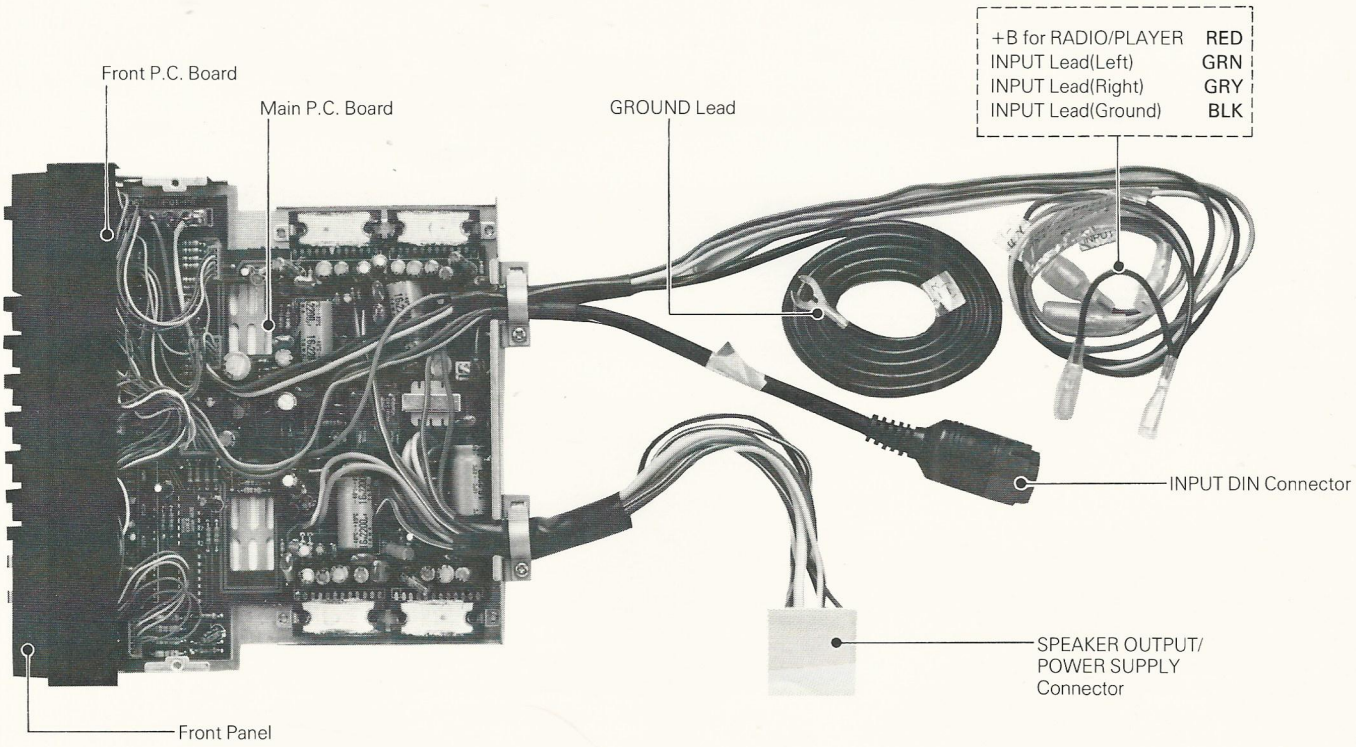

Figure 2

1. Removal of Top Cover

(1) Remove two screws marked "✻" and remove the bracket top as shown in Figure 3.

(2) Remove ten screws marked "○" as shown in Figure 3 & 4.

2. Removal of Nosepiece

(1) After removal of top cover, remove two screws marked "●" in Figure 5.

(2) Remove two screws marked "△" as shown in Figure 6.

(3) Remove eight knobs as shown in Figure 5.

3. Removal of Main P.C. Board

(1) After removal of top cover, remove six screws marked "▲" as shown in Figure 6.

(2) Disconnect all connectors and wires from the P.C. board.

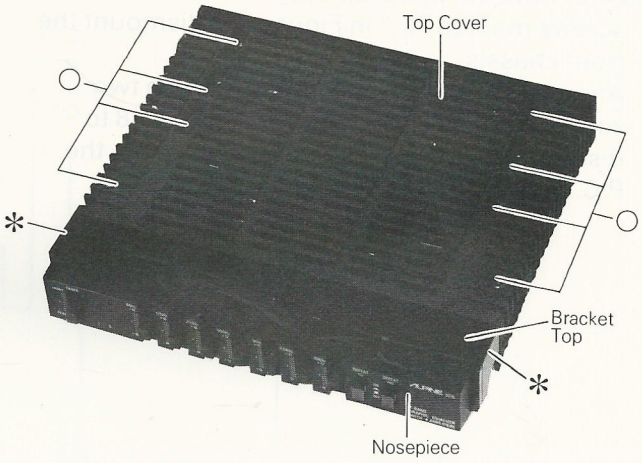

Figure 3

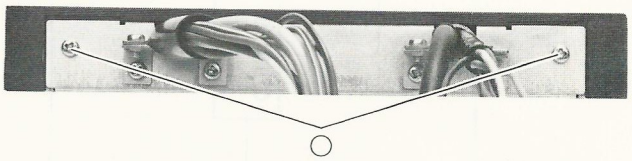

Figure 4

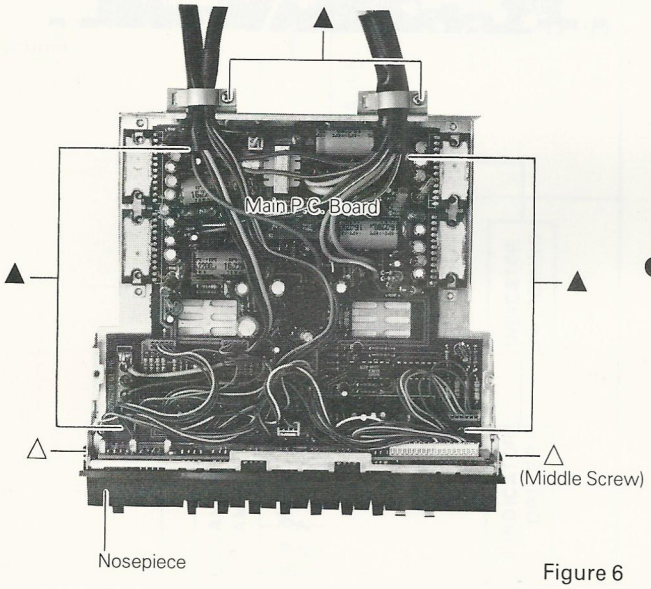

Figure 6

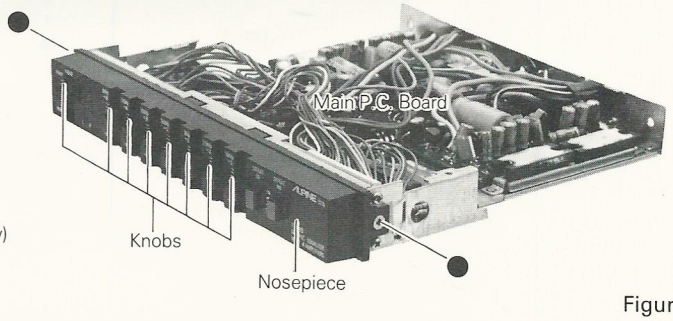

Figure 5

4. Removal of Front P.C. Board

(1) After removal of nosepiece, remove four screws marked "□" in Figure 7 to dismount the front chassis.

(2) After removal of front chassis, remove two screws marked "■" in as shown Figure 8 to disconnect all connectors and wires from the P.C. boards.

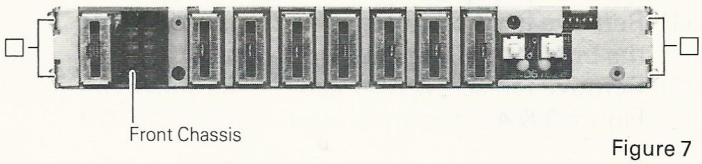

Figure 7

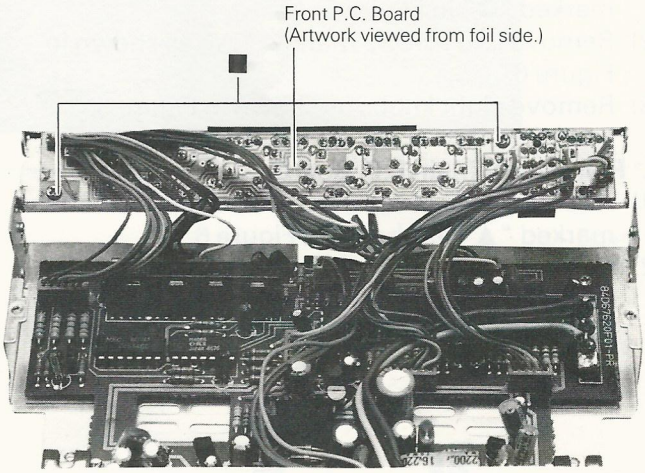

Figure 8

Block Diagram

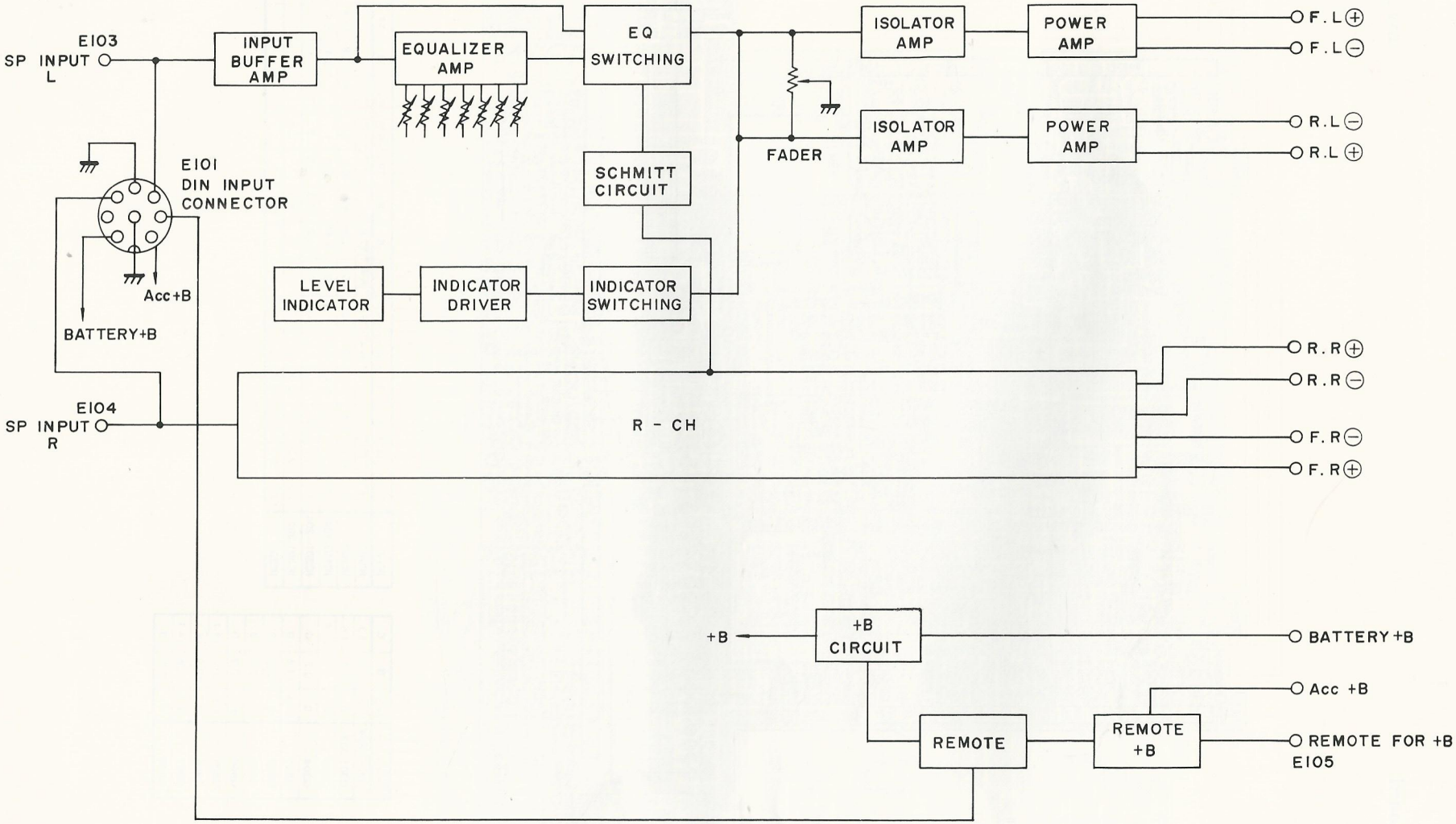

Parts Layout on P.C. Boards

• Main P.C. Board

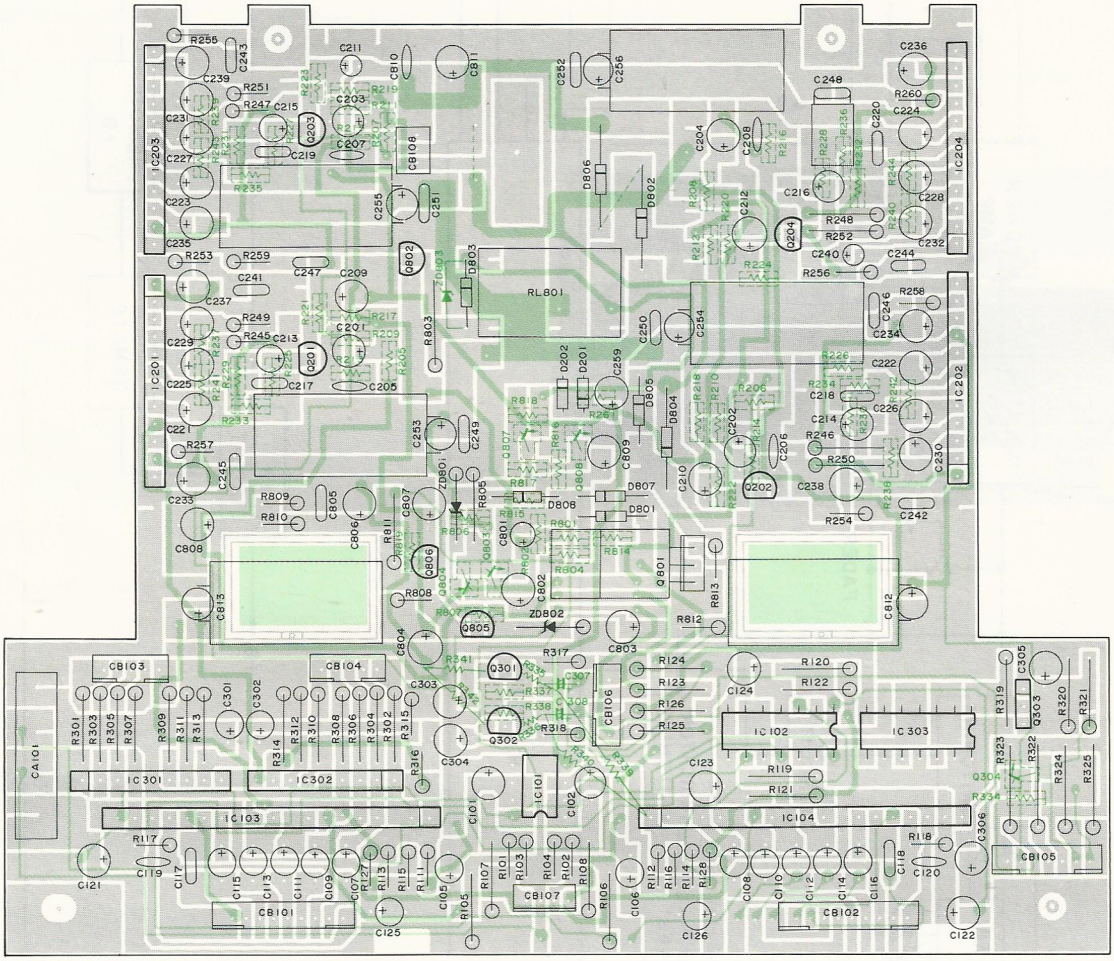

	E	B	C
Q201–204	5.0	4.3	3.3
Q301,302	0	0.7	4.6
Q303	0	0	12.8
Q304	0	0.7	0
Q801	14.4	14.4	0
Q802	0	0.7	0
Q803	0	0.7	0
Q804	6.7	13.8	0
Q805	9.5	10.2	14.1
Q806	13.2	13.9	14.1
Q807	14.3	13.6	14.1
Q808	0	0.7	0

IC(V)	1	2	3	4	5	6	7	8	9	10	11	12	13	14	15	16	17	18	19
IC101					6.4	6.4	6.4	12.8											
IC102	6.4	6.4	6.4	6.4	0	0	0	12.8	6.4	6.4	6.4	12.8	12.8	12.8					
IC103,104	6.4			6.4	6.4		0	6.4		6.4			6.4	6.4	6.4	6.4	6.4	6.4	12.8
IC201–204	7	13.2	0	1.2	1.2	0	0	14.2	14.3	13.2	7	0							
IC301,302	12.7	12.7	12.9	12.9	0	12.7	0	0	14.3										
IC303	12.8	0	0	12.8	12.8	0	0		12.8	0		0							

Top View

• Main P.C. Board

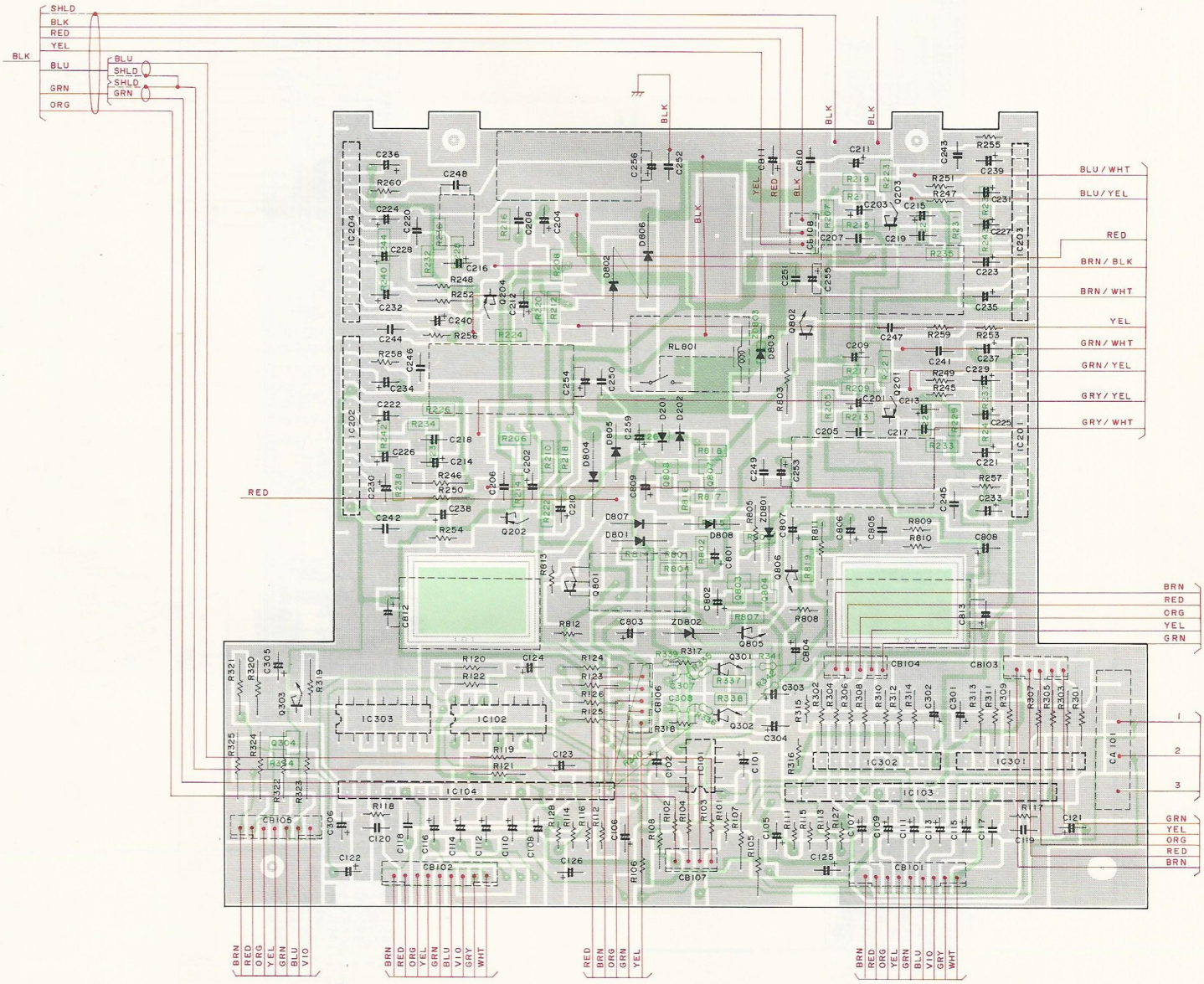

Bottom View

A B C D E F

• Front P.C. Board

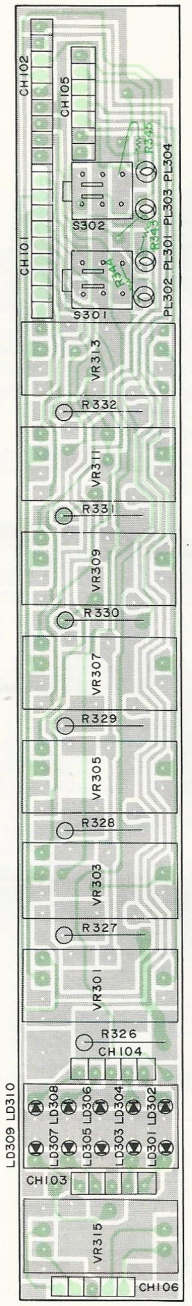

Top View

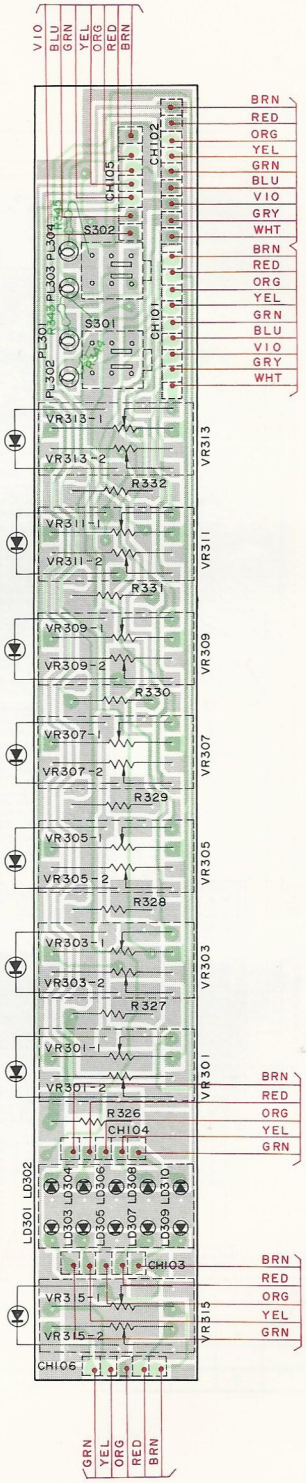

Bottom View

Electrical Parts List

Carbon resistors of less than 1/4 watts are not entered on the parts list, so please confirm them using the schematic diagram.

Symbol No.	Part No.	Description
Front P.C. Board		
LEDs		
LD301	48T66123F02	LED, (GRN)
LD302	48T66123F02	LED, (GRN)
LD303	48T66123F02	LED, (GRN)
LD304	48T66123F02	LED, (GRN)
LD305	48T66123F03	LED, (ORG)
LD306	48T66123F03	LED, (ORG)
LD307	48T66123F03	LED, (ORG)
LD308	48T66123F03	LED, (ORG)
LD309	48T66123F01	LED, (RED)
LD310	48T66123F01	LED, (RED)
Lamps		
PL301	65T67467F02	Pilot 6V-32mA
PL302	65T67467F02	Pilot 6V-32mA
PL303	65T67467F02	Pilot 6V-32mA
PL304	65T67467F02	Pilot 6V-32mA
Switches		
S301	40T65584F03	Push.SPH221(DEFEAT EQ)
S302	40T65584F03	Push. SPH221 (IND)
Resistors		
VR301	18T65560F01	VR, Slide. KL04-20K X2
VR303	18T65560F01	VR, Slide. KL04-20K X2
VR305	18T65560F01	VR, Slide. KL04-20K X2
VR307	18T65560F01	VR, Slide. KL04-20K X2
VR309	18T65560F01	VR, Slide. KL04-20K X2
VR311	18T65560F01	VR, Slide. KL04-20K X2
VR313	18T65560F01	VR, Slide. KL04-20K X2
VR315	18T65560F04	VR, Slide. KL05-20KWX2
Main P.C. Board		
ICs		
IC101	51S43471U02	uPC4558C
IC102	51T52388F01	MSM4066RS
IC103	51T66124F01	THG21005
IC104	51T66124F01	THG21005
IC201	51T67713F01	µPC1230H2
IC202	51T67713F01	µPC1230H2
IC203	51T67713F01	µPC1230H2
IC204	51T67713F01	µPC1230H2
IC301	51T61284F01	LB1403N
IC302	51T61284F01	LB1403N
IC303	51T67484F01	uPD4584-BC

Symbol No.	Part No.	Description
Transistors		
Q201	48T65363F01	2SA608
Q202	48T65363F01	2SA608
Q203	48T65363F01	2SA608
Q204	48T65363F01	2SA608
Q301	48S40627U07	2SD636
Q302	48S43525F02	2SD636
Q303	48T42182U01	2SD661
Q304	48T52439F01	2SD602A
Q801	48T47145F01	2SA1011
Q802	48S43525F02	2SC1815
Q803	48T52439F01	CP. 2SD602A
Q804	48T52437F01	CP. 2SB709A
Q805	48T43015U01	2SC2120
Q806	48T43015U01	2SC2120
Q807	48T52437F01	CP. 2SB709A
Q808	48T52439F01	CP. 2SD602A
Diodes		
D201	48C40235G02	10E2
D202	48C40235G02	10E2
D801	48C40235G02	10E2
D802	48T68580F03	DSA3A4-F5
D803	48C40235G02	10E2
D804	48T68580F03	DSA3A4-F5
D805	48C40235G02	10E2
D806	48T68580F03	DSA3A4-F5
D807	48C40235G02	10E2
D808	48T58583F01	SS176
ZD801	48T52739F44	Zenner, HZ7A-2
ZD802	48T52739F62	Zenner, HZ11A-2
ZD803	48T52739F57	Zenner, HZ9B-3
Relay		
RL801	80T65434F02	G6C-1117P (DC9V)
Capacitors		
C101	23T57007F09	Electrolytic 10µF 16V
C102	23T57007F09	Electrolytic 10µF 16V
C106	23T57007F09	Electrolytic 10µF 16V
C107	23T57007F06	Electrolytic 2.2µF 50V
C108	23T57007F06	Electrolytic 2.2µF 50V
C109	23T57007F05	Electrolytic 1.0µF 50V
C110	23T57007F05	Electrolytic 1.0µF 50V

Capacitors

Symbol No.	Part No.	Description		
C111	23T57007F04	Electrolytic	0.47μF	50V
C112	23T57007F04	Electrolytic	0.47μF	50V
C113	23T57007F02	Electrolytic	0.22μF	50V
C114	23T57007F02	Electrolytic	0.22μF	50V
C115	23T57007F01	Electrolytic	0.1μF	50V
C116	23T57007F01	Electrolytic	0.1μF	50V
C117	08T57705F75	Mylar	0.047μF	
C118	08T57705F75	Mylar	0.047μF	
C119	21C45322G25	Ceramic	220P	
C120	21C45322G25	Ceramic	220P	
C121	23T57007F09	Electrolytic	10μF	16V
C122	23T57007F09	Electrolytic	10μF	16V
C123	23T57007F09	Electrolytic	10μF	16V
C124	23T57007F09	Electrolytic	10μF	16V
C125	23T57007F09	Electrolytic	10μF	16V
C126	23T57007F09	Electrolytic	10μF	16V
C201	23T57007F09	Electrolytic	10μF	16V
C202	23T57007F09	Electrolytic	10μF	16V
C203	23T57007F09	Electrolytic	10μF	16V
C204	23T57007F09	Electrolytic	10μF	16V
C205	21S40655F26	Ceramic	180P	
C206	21S40655F26	Ceramic	180P	
C207	21S40655F26	Ceramic	180P	
C208	21S40655F26	Ceramic	180P	
C209	23T57007F15	Electrolytic	47μF	16V
C210	23T57007F15	Electrolytic	47μF	16V
C211	23T61523F15	Electrolytic	47μF	16V
C212	23T57007F15	Electrolytic	47μF	16V
C213	23T57007F09	Electrolytic	10μF	16V
C214	23T57007F09	Electrolytic	10μF	16V
C215	23T57007F09	Electrolytic	10μF	16V
C216	23T57007F09	Electrolytic	10μF	16V
C217	08T57705F05	Mylar	1000P	
C218	08T57705F05	Mylar	1000P	
C219	08T57705F05	Mylar	1000P	
C220	08T57705F05	Mylar	1000P	
C221	23T65374F05	Electrolytic	100μF	16V
C222	23T65374F05	Electrolytic	100μF	16V
C223	23T65374F05	Electrolytic	100μF	16V
C224	23T65374F05	Electrolytic	100μF	16V
C225	23T65374F01	Electrolytic	100μF	10V
C226	23T65374F01	Electrolytic	100μF	10V
C227	23T65374F01	Electrolytic	100μF	10V
C228	23T65374F01	Electrolytic	100μF	10V
C229	23T65374F01	Electrolytic	100μF	10V
C230	23S41198U33	Electrolytic	100μF	10V
C231	23T65374F01	Electrolytic	100μF	10V
C232	23T65374F01	Electrolytic	100μF	10V
C233	23T65374F01	Electrolytic	100μF	10V
C234	23T65374F01	Electrolytic	100μF	10V
C235	23T65374F01	Electrolytic	100μF	10V
C236	23T65374F01	Electrolytic	100μF	10V
C237	23T65374F01	Electrolytic	100μF	10V
C238	23T65374F01	Electrolytic	100μF	10V
C239	23T65374F01	Electrolytic	100μF	10V
C240	23S41198U33	Electrolytic	100μF	10V
C241	08T57705F29	Mylar	0.1μF	
C242	08T57705F29	Mylar	0.1μF	
C243	08T57705F29	Mylar	0.1μF	
C244	08T57705F29	Mylar	0.1μF	
C245	08T57705F29	Mylar	0.1μF	
C246	08T57705F29	Mylar	0.1μF	
C247	08T57705F29	Mylar	0.1μF	
C248	08T42629F29	Mylar	0.1μF	
C249	08T57705F29	Mylar	0.1μF	
C250	08T57705F29	Mylar	0.1μF	
C251	08T57705F29	Mylar	0.1μF	
C252	08T57705F29	Mylar	0.1μF	
C253	23T69238F01	Electrolytic	2400μF	16V
C254	23T69238F01	Electrolytic	2400μF	16V
C255	23T69238F01	Electrolytic	2400μF	16V
C256	23T69238F01	Electrolytic	2400μF	16V
C259	23T57007F09	Electrolytic	10μF	16V
C301	23T57007F09	Electrolytic	10μF	16V
C302	23T57007F09	Electrolytic	10μF	16V
C303	23T57007F09	Electrolytic	10μF	16V
C304	23T57007F09	Electrolytic	10μF	16V
C305	23T57007F09	Electrolytic	10μF	16V
C306	23T57007F09	Electrolytic	10μF	16V
C307	23T43247F09	Electrolytic	10μF	16V
C308	23T43247F09	Electrolytic	10μF	16V

Symbol No.	Part No.	Description
C801	23T43247F20	Electrolytic 470μF 6.3V
C802	23T57007F04	Electrolytic 0.47μF 50V
C803	23T65374F05	Electrolytic 100μF 16V
C804	23C42170G30	Electrolytic 470μF 16V
C805	08T57705F29	Mylar 0.1μF
C806	23T65374F05	Electrolytic 100μF 16V
C807	23T65374F05	Electrolytic 100μF 16V
C808	23T65374F05	Electrolytic 100μF 16V
C809	23T57007F08	Electrolytic 4.7μF 25V
C810	21C45322G33	Ceramic 0.047μF
C811	23C42170G30	Electrolytic 470μF 16V
C812	23T69238F01	Electrolytic 2400μF 16V
C813	23T69238F01	Electrolytic 2400μF 16V
Resistors		
R105	06T51015F20	FC 100 ohms 1/2W
R106	06T51015F20	FC 100 ohms 1/2W
R205	06S53330F80	CP. 1.3K ohms
R206	06S53330F80	CP. 1.3K ohms
R207	06S53330F80	CP. 1.3K ohms
R208	06S53330F80	CP. 1.3K ohms
R209	06S53330F89	CP. 33K ohms
R210	06S53330F89	CP. 33K ohms
R211	06S53330F89	CP. 33K ohms
R212	06S53330F89	CP. 33K ohms
R213	06S53330F89	CP. 33K ohms
R214	06S53330F89	CP. 33K ohms
R215	06S53330F89	CP. 33K ohms
R216	06S53330F89	CP. 33K ohms
R217	06S53330F57	CP. 1.5K ohms
R218	06S53330F57	CP. 1.5K ohms
R219	06S53330F57	CP. 1.5K ohms
R220	06S53330F57	CP. 1.5K ohms
R221	06S53330F61	CP. 2.2K ohms
R222	06S53330F61	CP. 2.2K ohms
R223	06S53330F61	CP. 2.2K ohms
R224	06S53330F61	CP. 2.2K ohms
R225	06S53330F65	CP. 3.3K ohms
R226	06S53330F65	CP. 3.3K ohms
R227	06S53330F65	CP. 3.3K ohms
R228	06S53330F65	CP. 3.3K ohms
R229	06S53330F68	CP. 4.3K ohms

Symbol No.	Part No.	Description
R230	06S53330F68	CP. 4.3K ohms
R231	06S53330F68	CP. 4.3K ohms
R232	06S53330F68	CP. 4.3K ohms
R233	06S53330F70	CP. 5.1K ohms
R234	06S53330F70	CP. 5.1K ohms
R235	06S53330F70	CP. 5.1K ohms
R236	06S53330F70	CP. 5.1K ohms
R237	06S53330F05	CP. 10 ohms
R238	06S53330F05	CP. 10 ohms
R239	06S53330F05	CP. 10 ohms
R240	06S53330F05	CP. 10 ohms
R241	06S53330F05	CP. 10 ohms
R242	06S53330F05	CP. 10 ohms
R243	06S53330F05	CP. 10 ohms
R244	06S53330F05	CP. 10 ohms
R261	06S53330F61	CP. 2.2K ohms
R322	06D40801G49	FC 270 ohms 1/2W
R323	06D40801G47	FC 220 ohms 1/2W
R324	06D40801G47	FC 220 ohms 1/2W
R325	06D40801G47	FC 220 ohms 1/2W
R334	06S53330F53	CP. 1K ohms
R337	06S53331F09	CP. 200K ohms
R338	06S53331F09	CP. 200K ohms
R801	06S53330F85	CP. 22K ohms
R802	06S53330F77	CP. 10K ohms
R803	06C43205J09	MF. 180 ohms 1/2W
R804	06S53330F85	CP. 22K ohms
R806	06S53330F53	CP. 1K ohms
R807	06S53330F37	CP. 220 ohms
R814	06S53331F02	CP. 100K ohms
R815	06S53330F53	CP. 1K ohms
R816	06S53330F85	CP. 22K ohms
R817	06S53330F69	CP. 4.7K ohms
R818	06S53330F77	CP. 10K ohms
R819	06S53330F53	CP. 1K ohms
Miscellaneous		
E101	01T67781F01	Assy., Din Conn. 8P
E102	30T40441U07	Cable, Input-E
E103	30T40440U09	Cable, Input-L
E104	30T40439U08	Cable, Input-R
E105	30T43964F05	Cable, For +B
E106	01T67845F01	Assy., Earth Wire
E107	01T67783F01	Assy., Output Wire
C901	08T68201F01	Cap, Through 3P

Mechanical Parts List

Symbol No.	INDEX	Part No.	Description
1	2A	03S44205G34	Screw, Pan (M2.6x5)
2	3A	*	Insulator, Fiber
3	5A	*	Assy., Front-Panel and Chassis
4	5A	03S40011G68	Screw, Countersink (M2.6x5)
5	5A	07A67464F01	Bracket, Knob
6	6A	36A66199F01	Knob, Slide
7	3B	15B67745F01	Bracket, Top
8	5B	15B67746F01	Cover, LED
9	5B	*	Chassis, Front
10	6B	13C67741F01	Nose Piece Assy.,
11	5C	03S44205G30	Screw, Pan (M2.6x4)
12	5C	43B41728U19	Bush, Lamp
13	6C	43B41728U13	Bush, Lamp
14	2C	*	Heat, Sink
15	2C	15B69191F01	Cover, Net
16	4C	*	Assy., Main PCB 3215
17	5C	*	Chassis, Base Assy.
18	1D	03S52360F89	Screw, Bind (M2.6x14)
20	4E	03S44205G05	Screw., Pan (M3x5)
21	3F	*	Tube vinyle (50mm)
22	3F	*	UL CSA Tube (50mm)
23	4F	*	Bracket, Clamp (B)
24	5F	*	Bracket, Clamp (A)

Note: *The parts without part number are not supplied.

Exploded View (General)

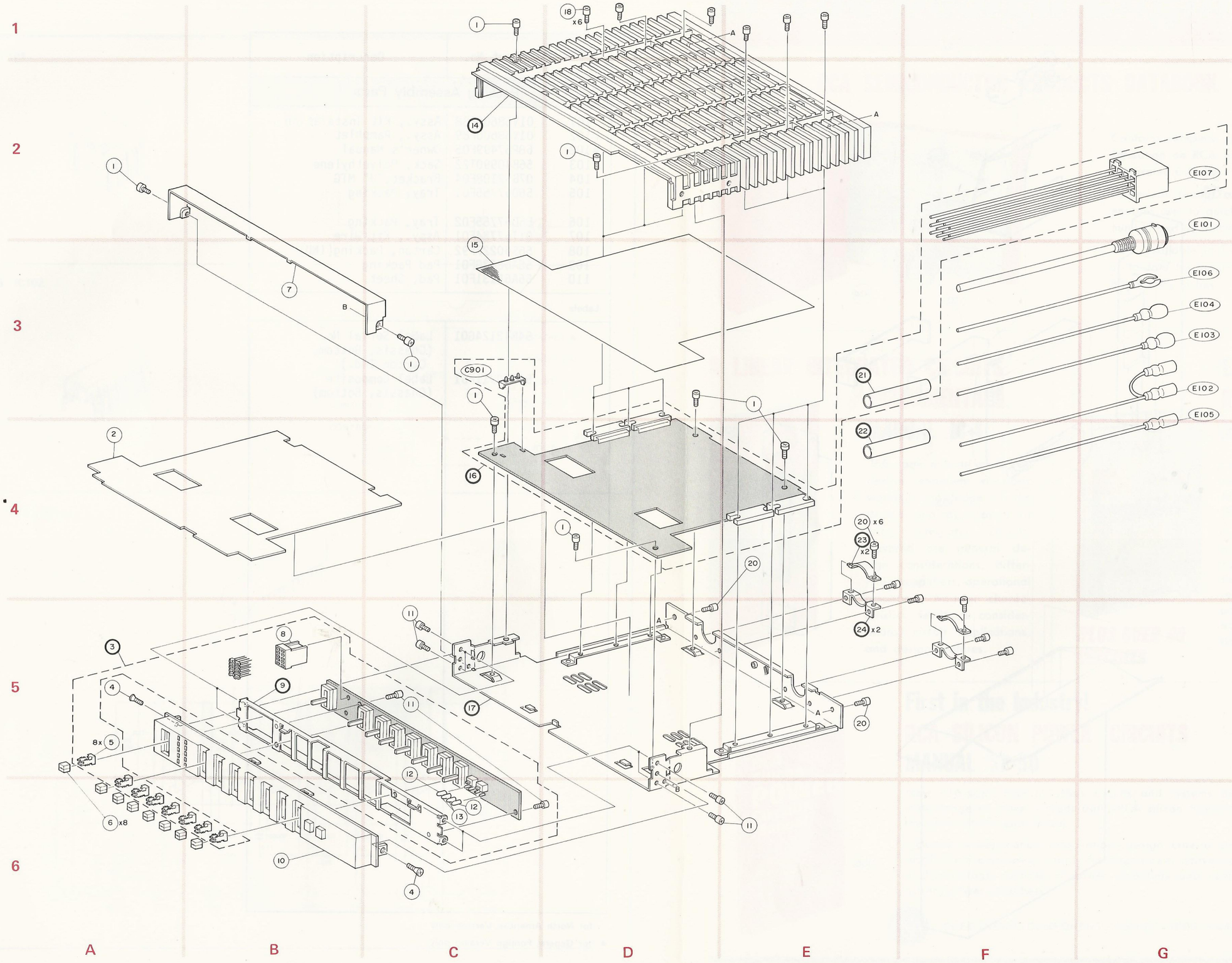

Packing Method View

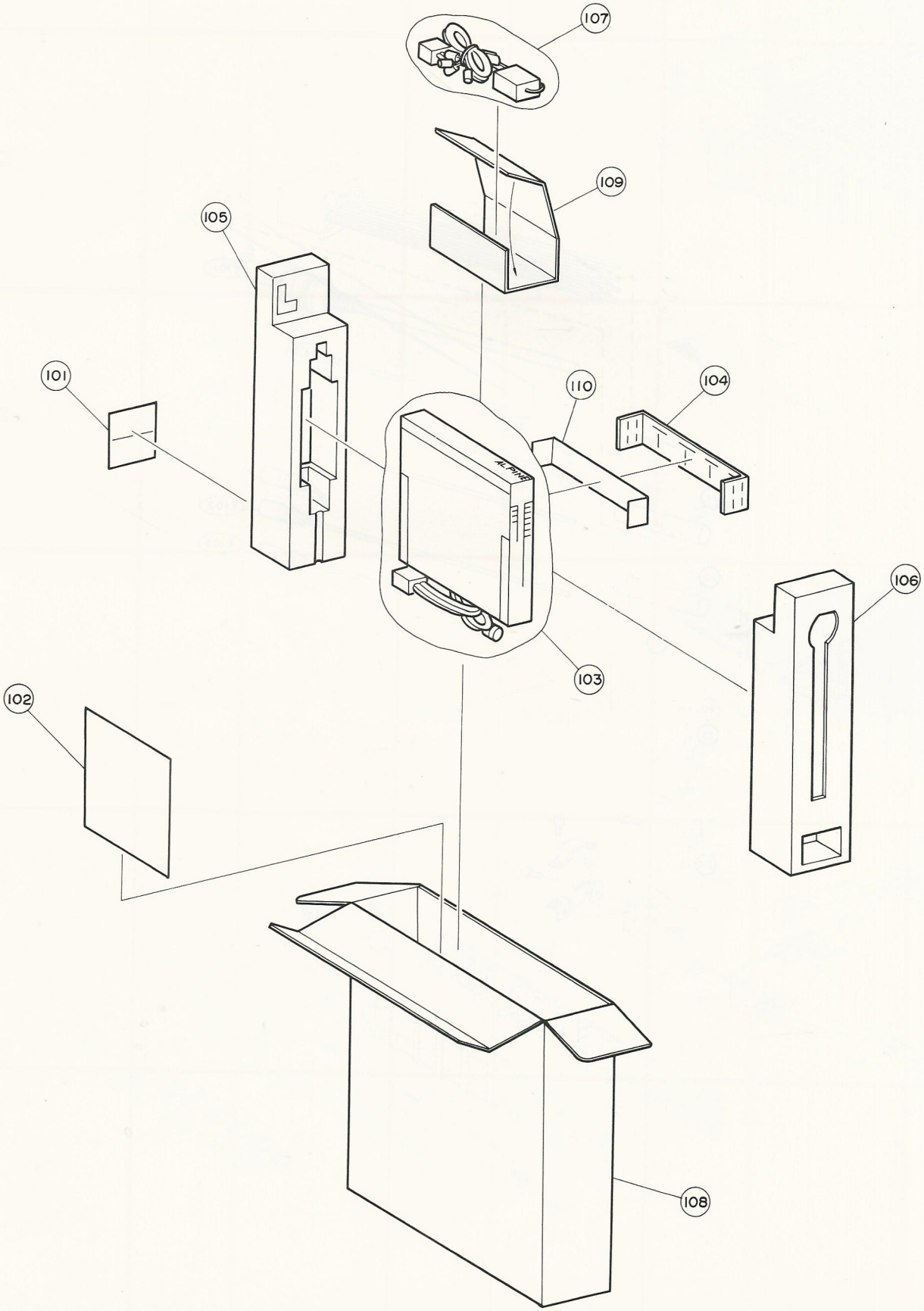

Packing Parts List

Symbol No.	Part No.	Description
	Packing Assembly Parts	
101	01V68600F88	Assy., Kit Instalation
△102	01V68600F89	Assy., Pamphlet
■102	68P67499F05	Owner's Manual
103	56B40990T22	Sack, Polyethylene
104	07B52108F04	Bracket,"U" MTG
105	56D67755F01	Tray, Packing
106	56D67755F02	Tray, Packing
107	01T67784F01	Assy., Kit Wire
108	56S60227F92	Carton, Packing(IND)
109	56A68638F01	Pad Packing
110	56A65131F01	Pad, Sheet
Labels		
	54B42124G01	Label Serial No. (Chassis, Bottom, Carton Ind.)
	54S60911F61	Label Composite (Chassis, Bottom)

△ for North American Version only

■ for General Foreign Version only

Semiconductors Lead Identifications

μPC4558 IC101

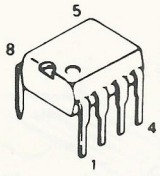

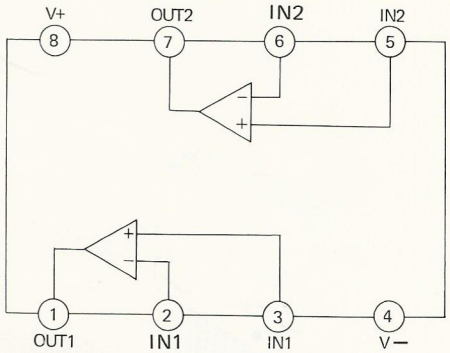

MSM4066RS IC102

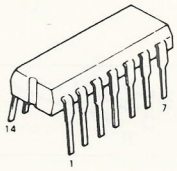

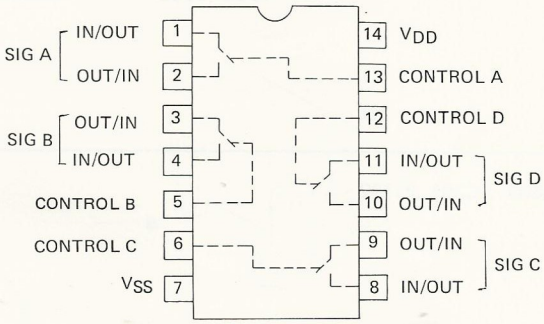

THG 21005 IC103, IC104

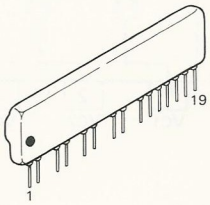

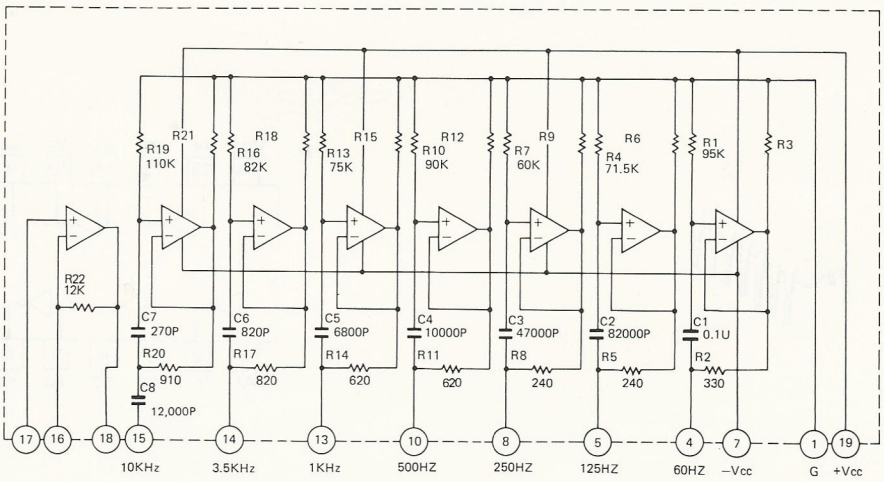

Schematic Diagram

ICs	IC101 IC103 IC301 IC104 IC302 IC102 IC303 IC201–204
Transistors	Q304 Q301–303 Q805–808 Q201–204 Q802–804 Q801
Diodes	LD301–310 D201 D808 D202 ZD802 ZD801 D803 D801 D802 D807 D804–806

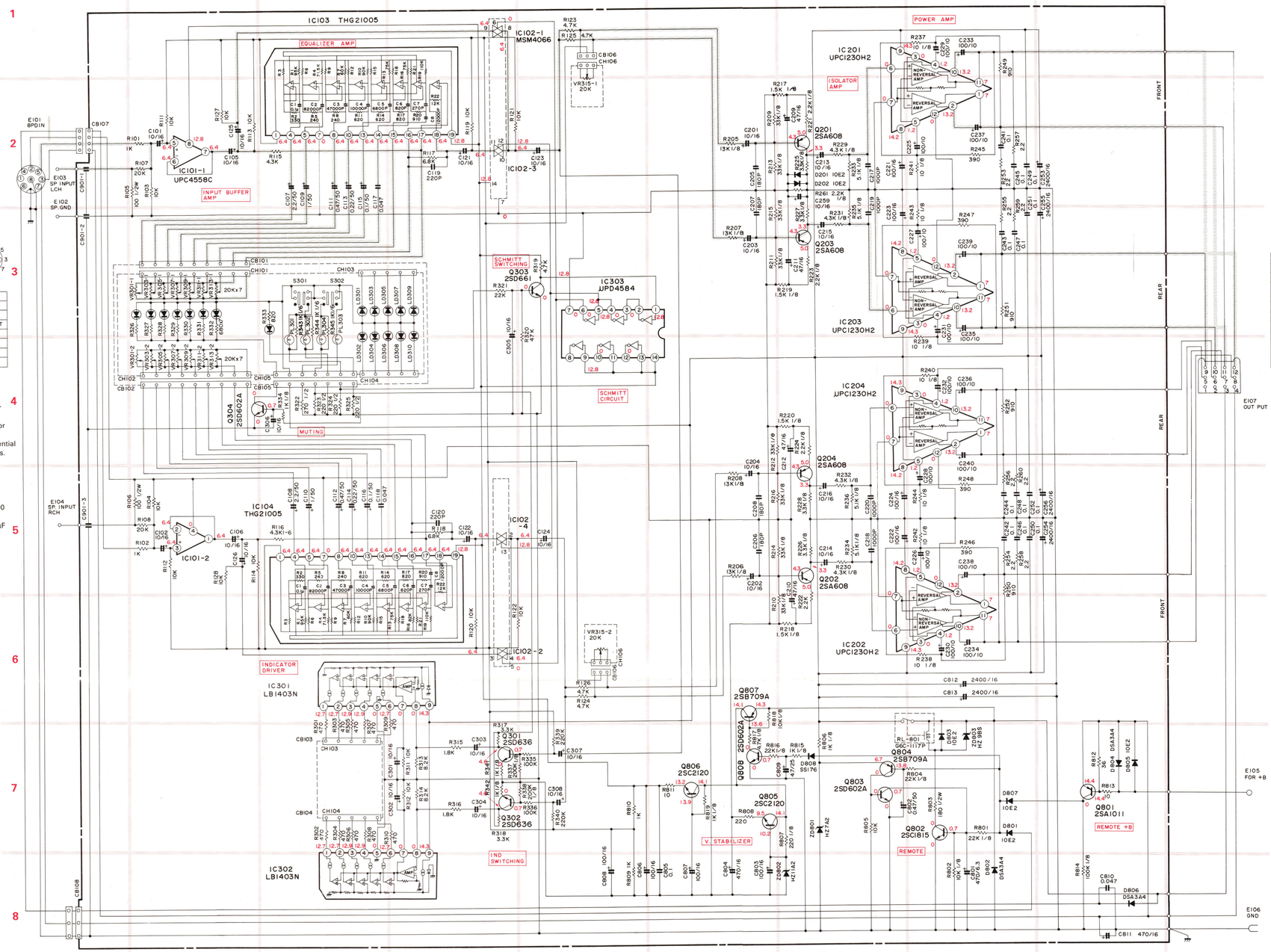

1	NC
2	SIGNAL GROUND
3	+B FOR REMOTE
4	SIGNAL RIGHT INPUT
5	SIGNAL LEFT INPUT
6	+B BATTERY
7	+B ACC
8	SHILD GROUND

12	FRONT LEFT OUTPUT +
11	FRONT LEFT OUTPUT −
10	REAR LEFT OUTPUT +
9	REAR LEFT OUTPUT −
8	FRONT RIGHT OUTPUT +
7	FRONT RIGHT OUTPUT −
6	REAR RIGHT OUTPUT +
5	REAR RIGHT OUTPUT −
4	+B ACC
3	+B BATTERY
2	NC
1	NC

NOTES:

1. Diodes with description omitted are diode MA165TA or equivalent.
2. Transistors description omitted are transistor 2SD636 or equivalent.
3. Each voltage is measured in respect to the ground potential using a digital voltmeter under the following conditions.
   Signal: None is applied.
   Load: None is connected.
   Equalizer controls: At center
   Fader control: At center
   Switches: OFF
4. All resistance values are in ohms K=1,000 M=1,000,000
5. All resistors are rated at ⅙ watt, 5%
6. All capacitance values are in micro-farad (μF) $P=10^{-6}$ μF
7. All capacitors are rated at 500WV
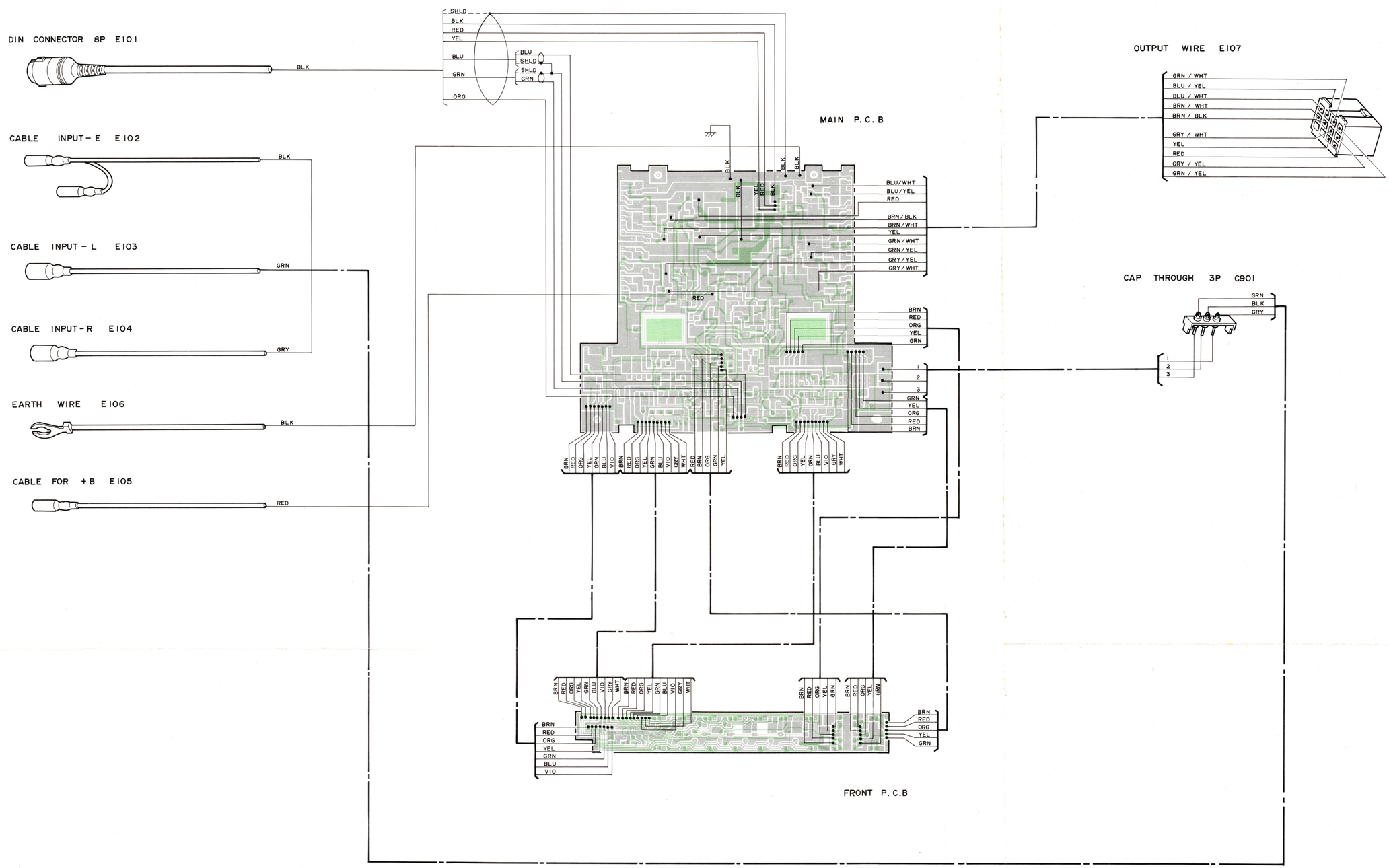
Wiring Diagram