ALPINE SERVICE MANUAL

7-Band Graphic Equalizer Amplifier

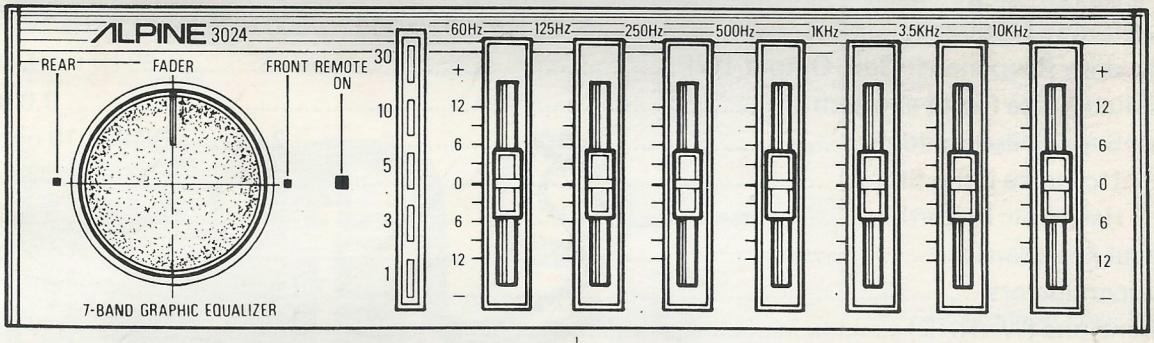

SIMILAR 3214
but for wiring looms.
& "Remote" wiring.

3024

Contents

Specifications 2
Parts Locations and Disassembly Instructions 3
Block Diagram 5
Parts Layout on P.C. Board 6
Schematic Diagram 9
Wiring Diagram 11
Electrical Parts List 13
Mechanical Parts List 16
Exploded View 17
Packing Method View 19
Packing Parts List 20
Semiconductors Lead Identifications 21

Specifications

Power Supply	14.4V DC (11.0 to 16.0V allowable)
Grounding System	Negative Ground
Current Drain (Output 8W/ch)	5.0A
Power Output (1 kHz, 8%)	12W/ch
Equalization Range	±10dB
Equalization Frequency	60 Hz/125 Hz/250 Hz/500 Hz/1 kHz/3.5 kHz/10 kHz
Frequency Response (−3dB, Output 1W)	50 Hz to 15 kHz
Residual Noise (Input shorted)	3.0 mV
Input Sensitivity/Impedance	2.0V±1 dB/100±10 ohms
Signal to Noise Ratio (IHF-A)	70 dB
Total Harmonic Distortion	0.8%
Output Impedance	4 ohms
Semiconductors	7 ICs, 3 Transistors, 7 Diodes
Dimensions (W×H×D)	150×42×149 mm
Weight	1.0 kg

Parts Locations and Disassembly Instructions

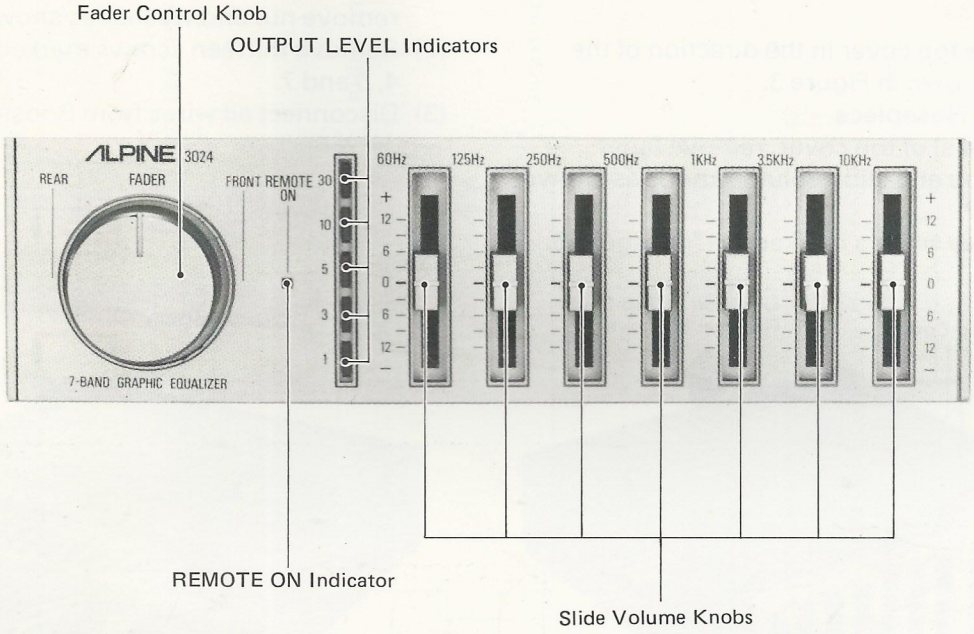

Figure 1

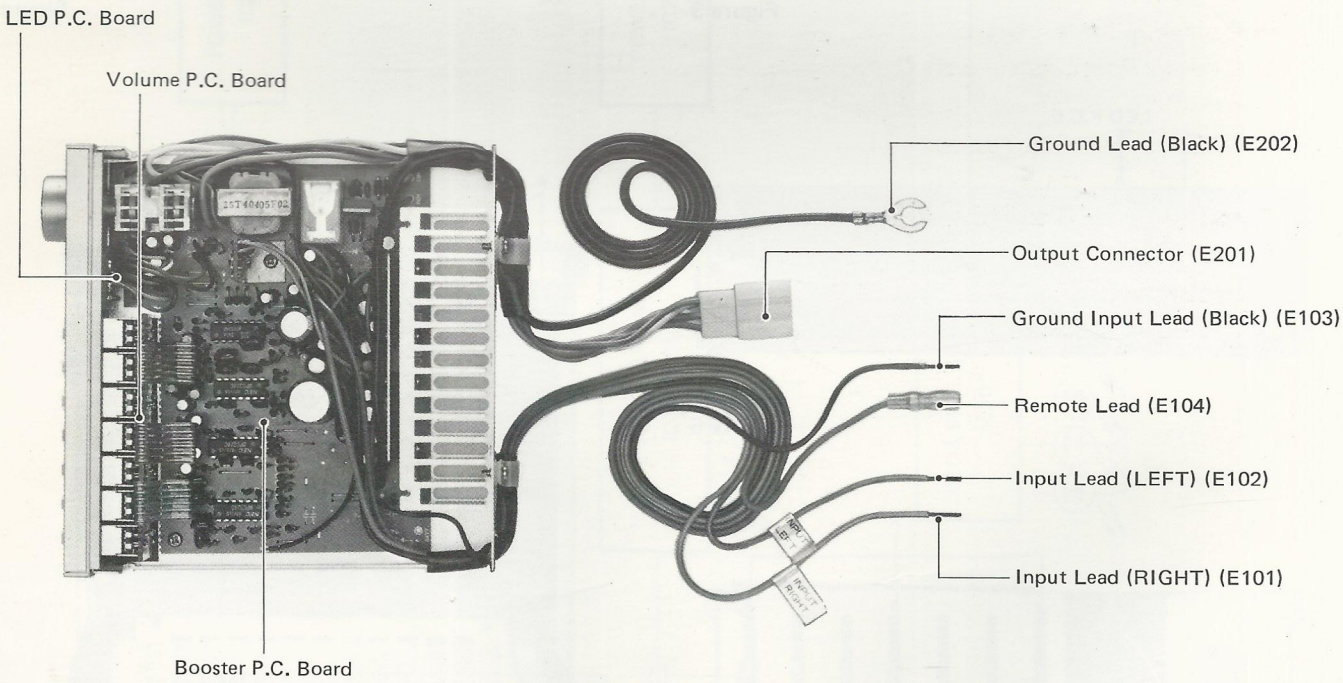

Figure 2

1. Removal of Top Cover

(1) Remove four screws marked "○" in Figures 3 and 4.

(2) Pull out the top cover in the direction of the arrow as shown in Figure 3.

2. Removal of Nosepiece

(1) After removal of top cover, remove fader control knob and slide volume knobs as shown in Figure 3.

(2) Remove two screws marked "△" in Figure 5.

3. Removal of Booster P.C. Board

(1) After removal of top cover and nose piece, remove nut and washer as shown in Figure 6.

(2) Remove thirteen screws marked "★" in Figures 4, 6 and 7.

(3) Disconnect all wires from Booster P.C. board.

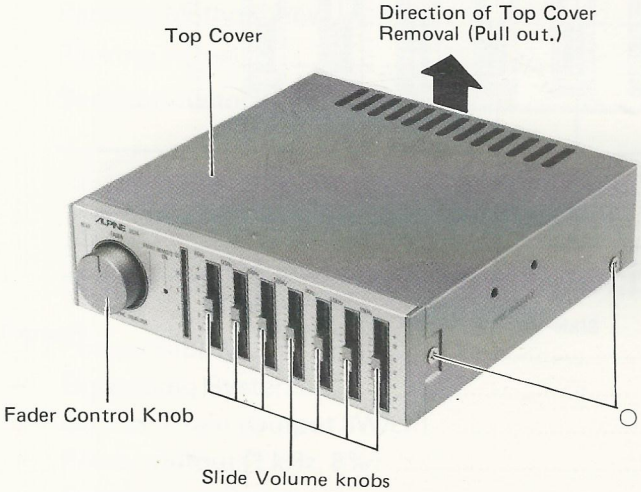

Figure 3

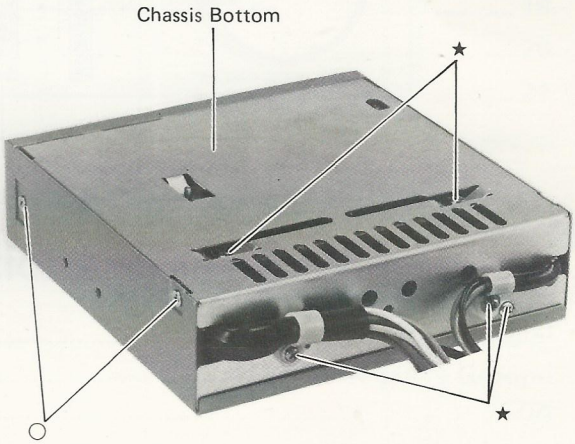

Figure 4

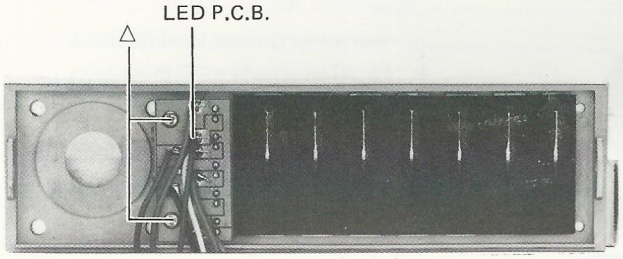

Figure 5

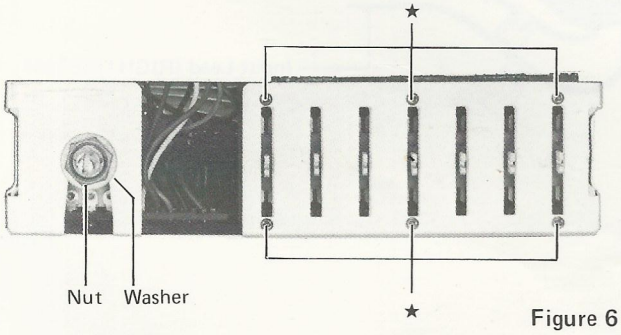

Figure 6

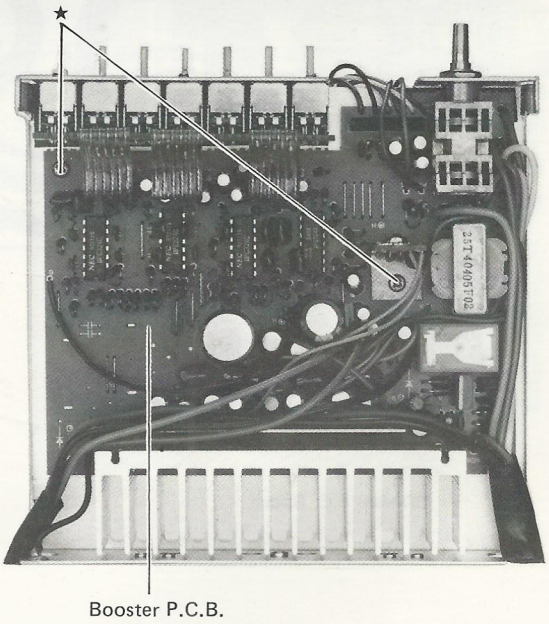

Figure 7

Block Diagram

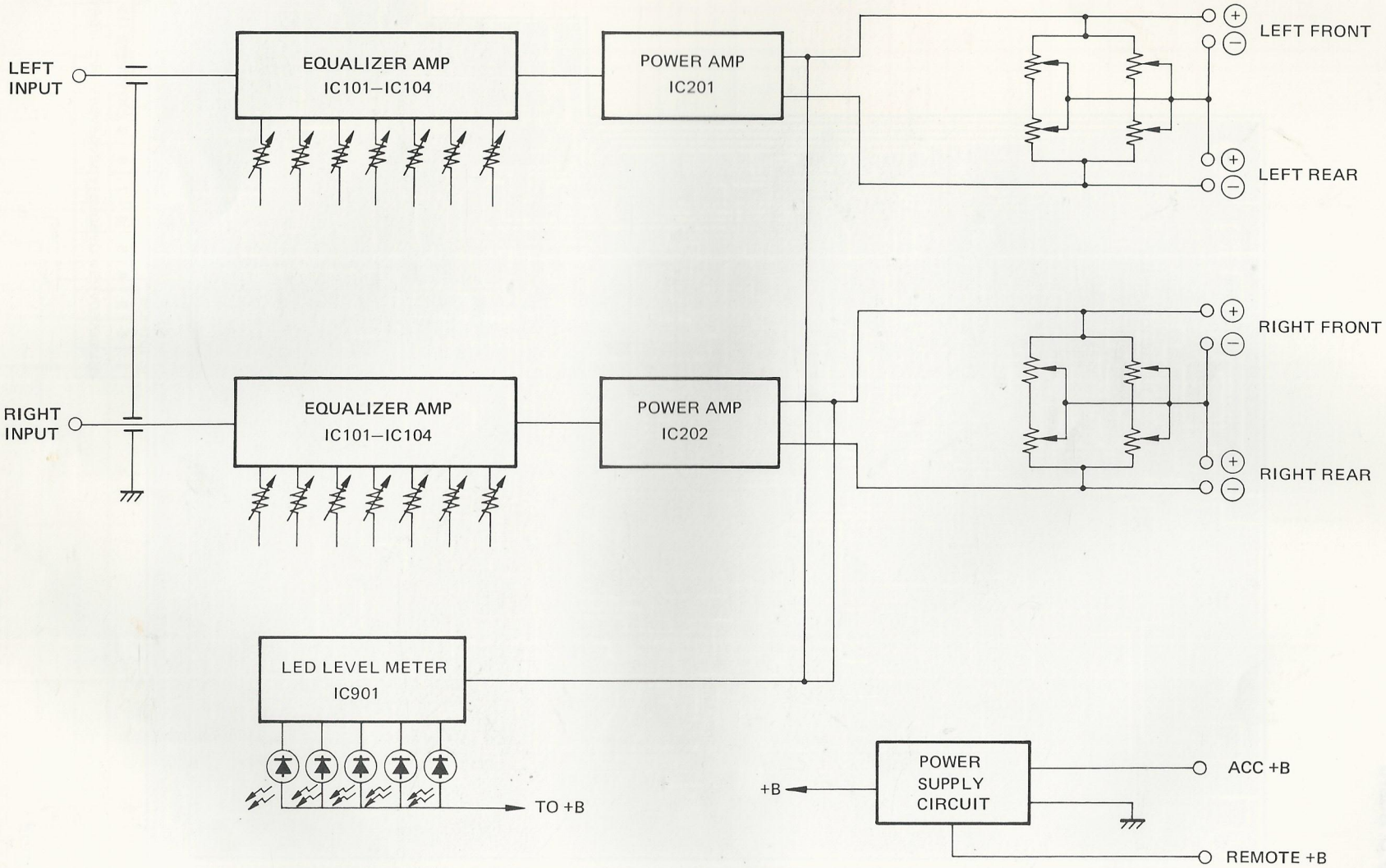

Parts Layout on P.C. Boards

● **Booster P.C. Board**

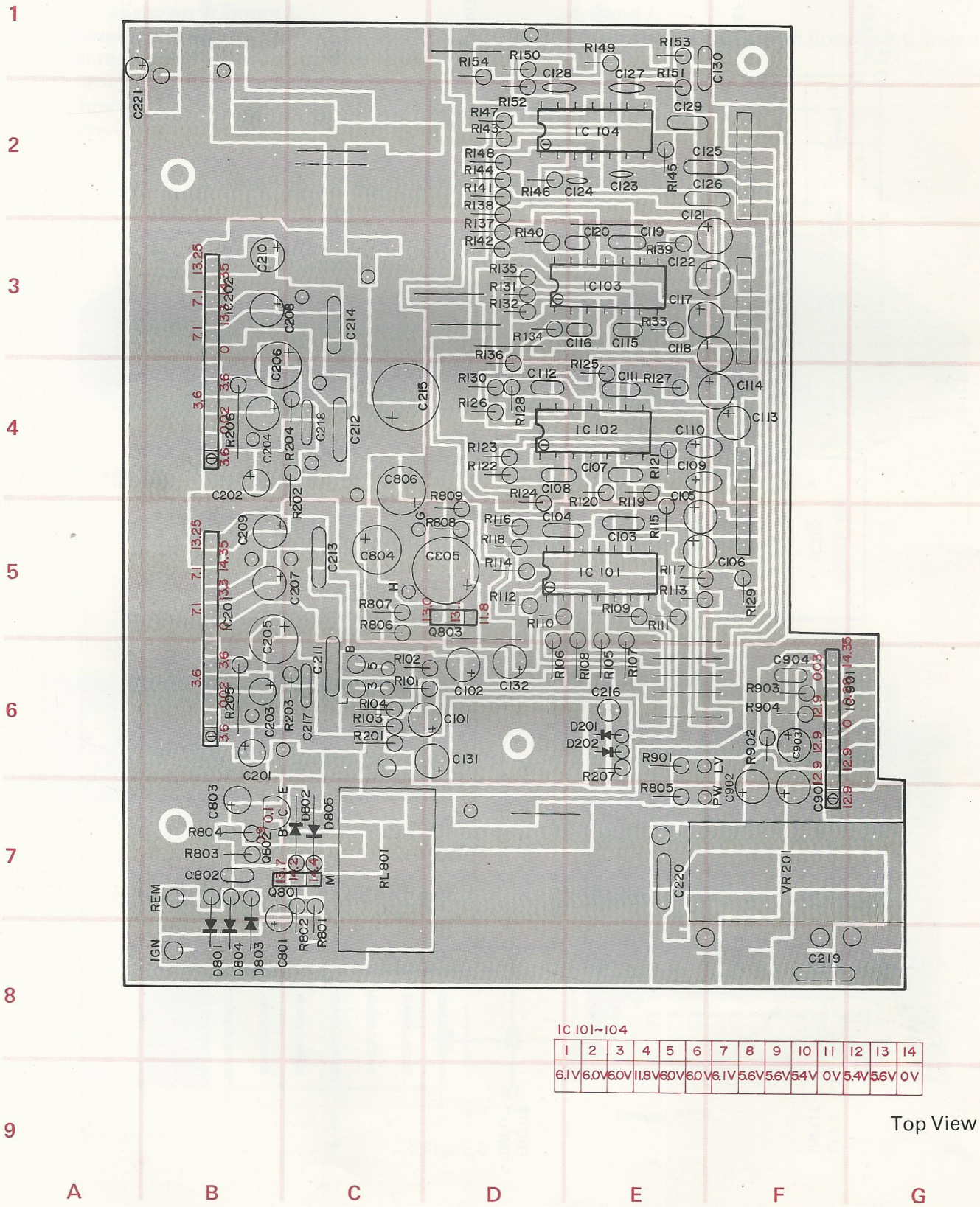

IC 101~104

1	2	3	4	5	6	7	8	9	10	11	12	13	14
6.1V	6.0V	6.0V	11.8V	6.0V	6.0V	6.1V	5.6V	5.6V	5.4V	0V	5.4V	5.6V	0V

Top View

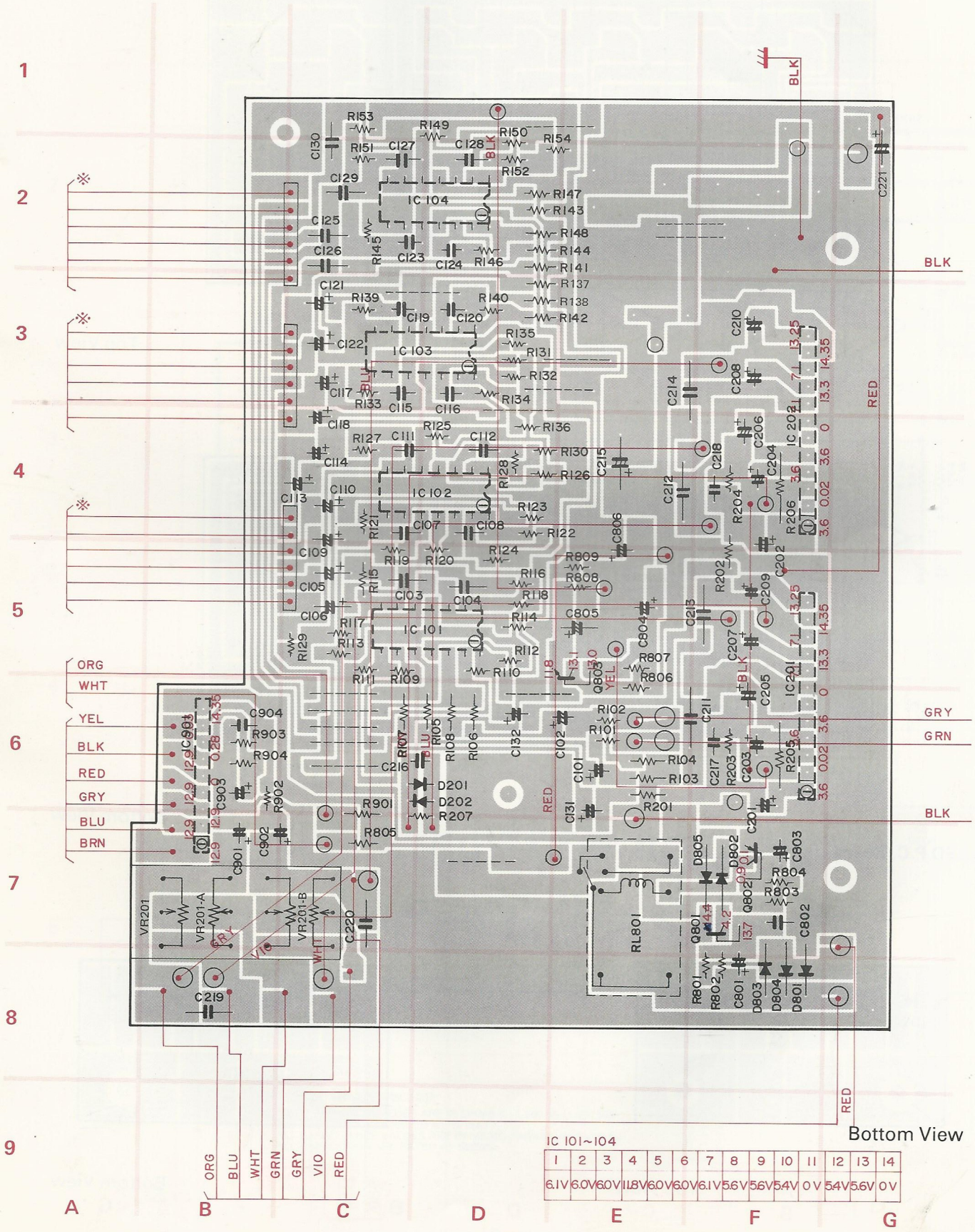

1	2	3	4	5	6	7	8	9	10	11	12	13	14
6.1V	6.0V	6.0V	11.8V	6.0V	6.0V	6.1V	5.6V	5.6V	5.4V	0V	5.4V	5.6V	0V

● **Volume P.C. Board**

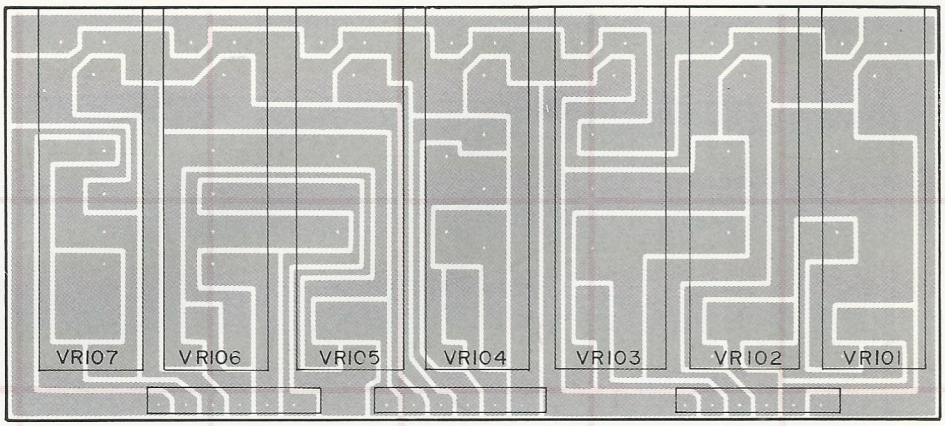

Top View

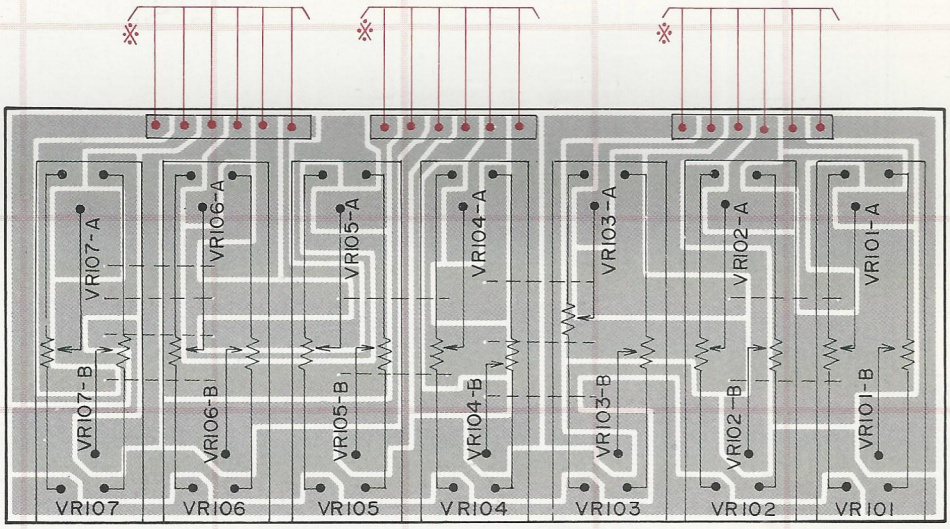

Bottom View

● **LED P.C. Board**

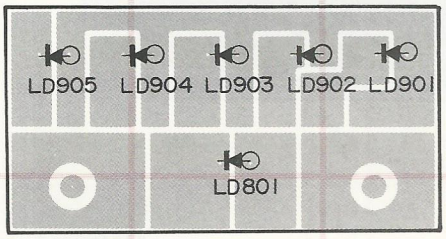

Top View

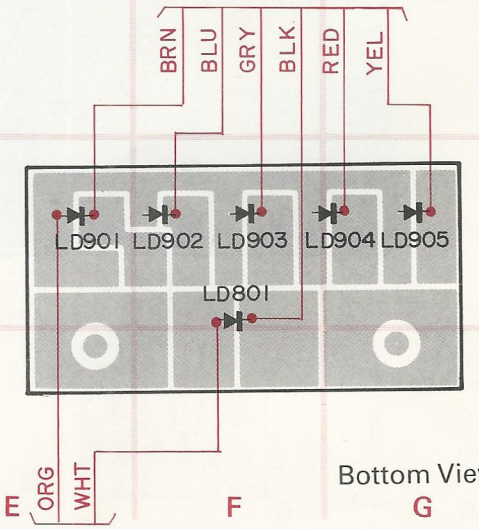

Bottom View

Schematic Diagram

IC 201 , IC 202

1	2	3	4	5	6
3.6V	0.05V	0.02V	3.6V	3.6V	3.1V

7	8	9	10	11	12
0V	7.1V	13.3V	7.1V	14.35V	13.25V

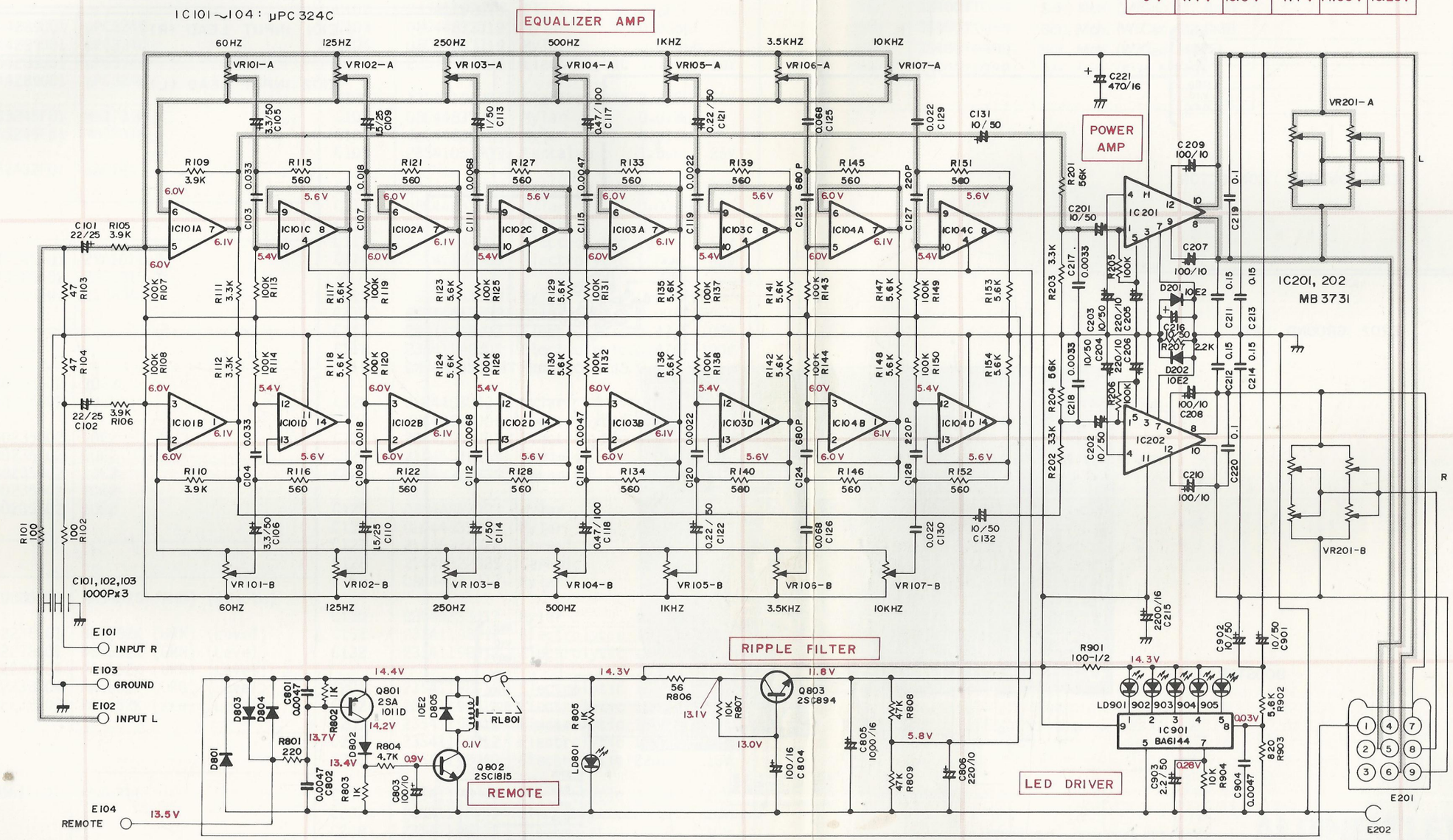

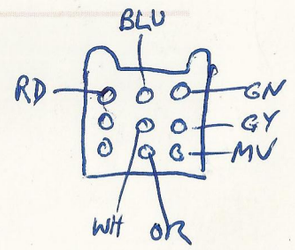

E201 Output Connector

1	ACC	Red
2	—	
3	—	
4	Left Front ⊕	Blue
5	Left Front ⊖ Left Rear ⊕	white
6	Left Rear ⊖	Orange
7	Right Front ⊕	Green
8	Right Front ⊖ Right Rear ⊕	Grey
9	Right Rear ⊖	Mauve

IC 901

1~4, 6	5	7	8	9
12.9V	0V	0.28V	0.03V	14.35V

NOTE:
UNLESS OTHERWISE SPECIFIED,
1. ALL RESISTANCE VALUES ARE IN OHMS K=1,000 M=1,000,000
2. ALL RESISTORS ARE RATED AT ¼ WATT, 5%
3. ALL CAPACITANCE VALUES ARE IN MICRO-FARAD (μF) P=10 ⁻⁶μF
4. ALL CAPACITORS ARE RATED AT 500WV

Wiring Diagram

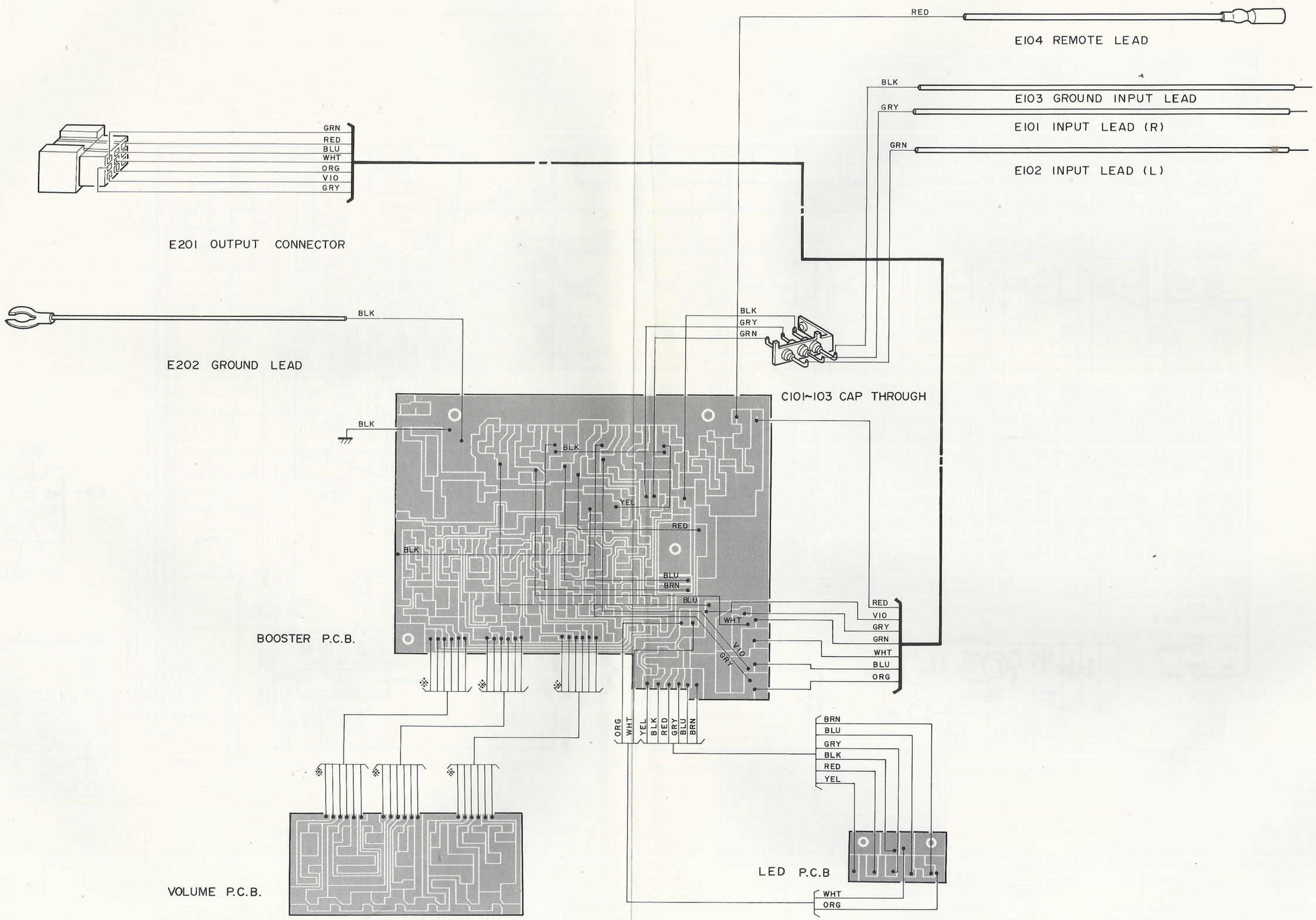

Exploded View

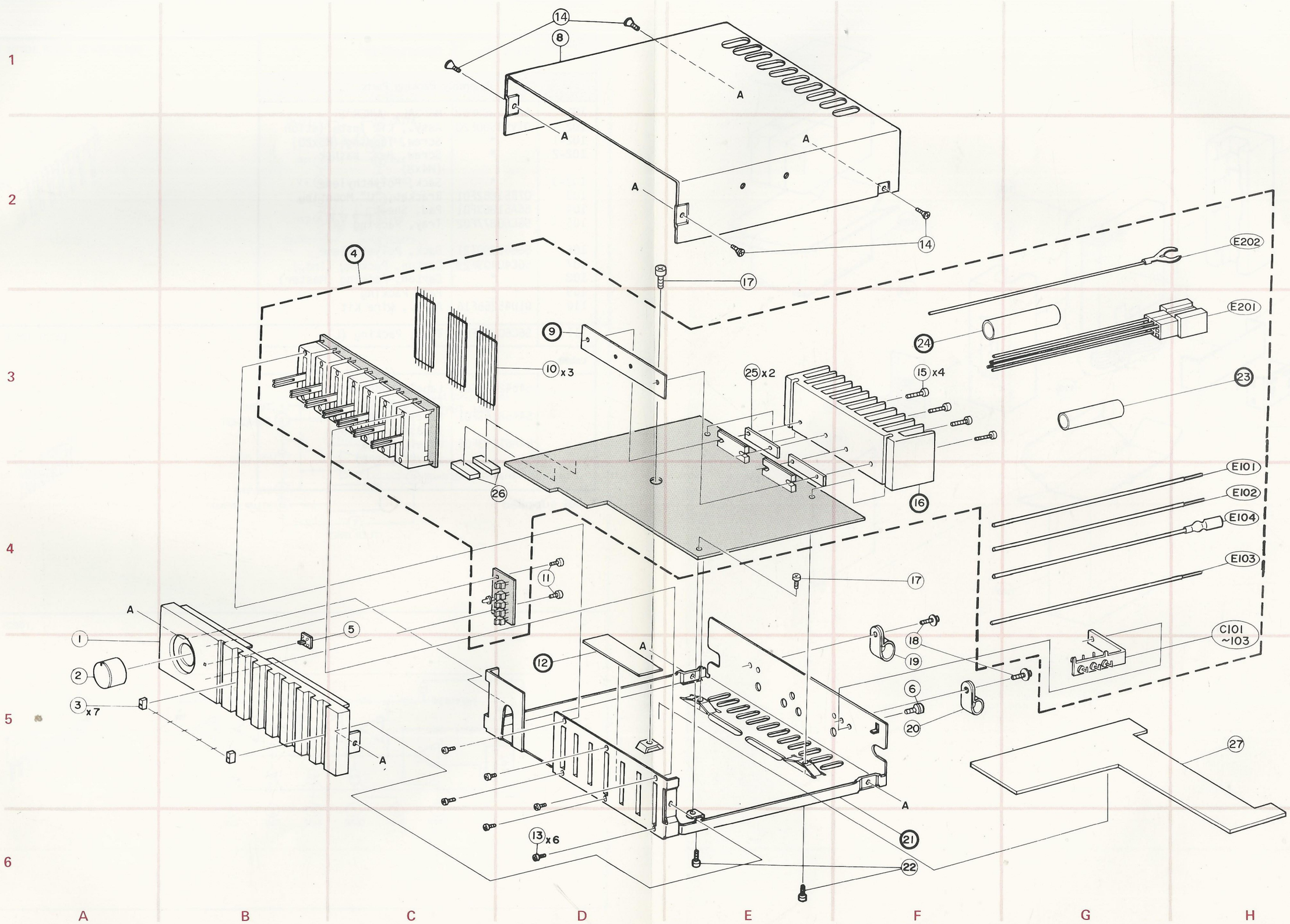

Electrical Parts List

Resistors: (All resistors are carbon film, ±5% unless otherwise noted.)
μF = microfarads, pF = picofarads.

Symbol No.	Part No.	Description
Booster P. C. Board		
ICs		
IC101	51T44289U01	μPC324C
IC102	51T44289U01	μPC324C
IC103	51T44289U01	μPC324C
IC104	51T44289U01	μPC324C
IC201	51T53245F01	MB3731M
IC202	51T53245F01	MB3731M
IC901	51T52432F01	BA6144
Transistors		
Q801	48T47145F01	2SA1011-D
Q802	48S43525F02	2SC1815-Y
Q803	48T47166F01	2SC894
Diodes		
D201	48C40235G02	10E2
D202	48C40235G02	10E2
D801	48C40235G02	10E2
D802	48C30235G02	10E2
D803	48C40235G02	10E2
D804	48C40235G02	10E2
D805	48C40235G02	10E2
LEDs		
LD801	48T50886F02	AA3432S (AMB) (Remote)
LD901	48T52238F01	BG5552K (GRN) (Level)
LD902	48T52238F01	BG5552K (GRN) (Level)
LD903	48T52238F04	AA5552K (ORG) (Level)
LD904	48T52238F04	AA5552K (ORG) (Level)
LD905	48T52238F02	PR5552K (RED) (Level)
Relay		
RL801	80T40631F01	FBR-311

Symbol No.	Part No.	Description
Capacitors		
C101	23S41198U15	Electrolytic 22μF 25V
C102	23S41198U15	Electrolytic 22μF 25V
C103	08C44833J19	Mylar 0.033μF
C104	08C44833J19	Mylar 0.033μF
C105	23S41198U07	Electrolytic 3.3μF 50V
C106	23S41198U07	Electrolytic 3.3μF 50V
C107	08C44833J16	Mylar 0.018μF
C108	08C44833J16	Mylar 0.018μF
C109	23S41059P09	Tantalum 1.5μF 25V
C110	23S41059P09	Tantalum 1.5μF 25V
C111	08C44833J11	Mylar 0.0068μF
C112	08C44833J11	Mylar 0.0068μF
C113	23S41198U03	Electrolytic 1μF 50V
C114	23S41198U03	Electrolytic 1μF 50V
C115	08C44833J09	Mylar 0.0047μF
C116	08C44833J09	Mylar 0.0047μF
C117	23S41198U02	Electrolytic 0.47μF 100V
C118	23S41198U02	Electrolytic 0.47μF 100V
C119	08C44833J05	Mylar 0.0022μF
C120	08C44833J05	Mylar 0.0022μF
C121	23C42909J01	Electrolytic 0.22μF 50V
C122	23C42909J01	Electrolytic 0.22μF 50V
C123	21C45322G39	Ceramic 680pF 50V
C124	21C45322G39	Ceramic 680pF 50V
C125	08C44833J23	Mylar 0.068μF
C126	08C44833J23	Mylar 0.068μF
C127	21C45322G25	Ceramic 220pF 50V
C128	21C45322G25	Ceramic 220pF 50V
C129	08C44833J17	Mylar 0.022μF
C130	08C44833J17	Mylar 0.022μF
C131	23S41198U12	Electrolytic 10μF 50V
C132	23S41198U12	Electrolytic 10μF 50V
C201	23S41198U12	Electrolytic 10μF 50V
C202	23S41198U12	Electrolytic 10μF 50V
C203	23S41198U12	Electrolytic 10μF 50V
C204	23S41198U12	Electrolytic 10μF 50V
C205	23S41198U40	Electrolytic 220μF 10V
C206	23S41198U40	Electrolytic 220μF 10V
C207	23S41198U33	Electrolytic 100μF 10V
C208	23S41198U33	Electrolytic 100μF 10V
C209	23S41198U33	Electrolytic 100μF 10V
C210	23S41198U33	Electrolytic 100μF 10V

Symbol No.	Part No.	Description	
C211	08C44833J27	Mylar 0.15μF	
C212	08C44833J27	Mylar 0.15μF	
C213	08C44833J27	Mylar 0.15μF	
C214	08C44833J27	Mylar 0.15μF	
C215	23S41198U71	Electrolytic 2200μF	16V
C216	23S41198U12	Electrolytic 10μF	50V
C217	08C44833J07	Mylar 0.0033μF	
C218	08C44833J07	Mylar 0.0033μF	
C219	08C44833J25	Mylar 0.1μF	
C220	08C44833J25	Mylar 0.1μF	
C221	23C42170G30	Electrolytic 470μF	16V
C801	08C44833J09	Mylar 0.0047μF	
C802	08C44833J09	Mylar 0.0047μF	
C803	23S41198U33	Electrolytic 100μF	10V
C804	23S41198U34	Electrolytic 100μF	16V
C805	23T51232F02	Electrolytic 1000μF	16V
C806	23S41198U40	Electrolytic 220μF	10V
C901	23S41198U12	Electrolytic 10μF	50V
C902	23S41198U12	Electrolytic 10μF	50V
C903	23S41198U05	Electrolytic 2.2μF	50V
C904	08C44833J09	Mylar 0.0047μF	
Resistors			
VR101	18T40950T03	20k ohm	
VR102	18T40950T03	20k ohm	
VR103	18T40950T03	20k ohm	
VR104	18T40950T03	20k ohm	
VR105	18T40950T03	20k ohm	
VR106	18T40950T03	20k ohm	
VR107	18T40950T03	20k ohm	
VR201	18T51771F01	Fader, Control	
R101	06S41801P20	100 ohm	1/4W
R102	06S41801P20	100 ohm	1/4W
R103	06S41801P16	47 ohm	1/4W
R104	06S41801P16	47 ohm	1/4W
R105	06S41801P39	3.9k ohm	1/4W
R106	06S41801P39	3.9k ohm	1/4W
R107	06S41801P56	100k ohm	1/4W
R108	06S41801P56	100k ohm	1/4W
R109	06S41801P39	3.9k ohm	1/4W
R110	06S41801P39	3.9k ohm	1/4W
R111	06S41801P38	3.3k ohm	1/4W
R112	06S41801P38	3.3k ohm	1/4W
R113	06S41801P56	100k ohm	1/4W
R114	06S41801P56	100k ohm	1/4W
R115	06S41801P29	560 ohm	1/4W

Symbol No.	Part No.	Description	
R116	06S41801P29	560 ohm	1/4W
R117	06S41801P41	5.6k ohm	1/4W
R118	06S41801P41	5.6k ohm	1/4W
R119	06S41801P56	100k ohm	1/4W
R120	06S41801P56	100k ohm	1/4W
R121	06S41801P29	560 ohm	1/4W
R122	06S41801P29	560 ohm	1/4W
R123	06S41801P41	5.6k ohm	1/4W
R124	06S41801P41	5.6k ohm	1/4W
R125	06S41801P56	100k ohm	1/4W
R126	06S41801P56	100k ohm	1/4W
R127	06S41801P29	560 ohm	1/4W
R128	06S41801P29	560 ohm	1/4W
R129	06S41801P41	5.6k ohm	1/4W
R130	06S41801P41	5.6k ohm	1/4W
R131	06S41801P56	100k ohm	1/4W
R132	06S41801P56	100k ohm	1/4W
R133	06S41801P29	560 ohm	1/4W
R134	06S41801P29	560 ohm	1/4W
R135	06S41801P41	5.6k ohm	1/4W
R136	06S41801P41	5.6k ohm	1/4W
R137	06S41801P56	100k ohm	1/4W
R138	06S41801P56	100k ohm	1/4W
R139	06S41801P29	560 ohm	1/4W
R140	06S41801P29	560 ohm	1/4W
R141	06S41801P41	5.6k ohm	1/4W
R142	06S41801P41	5.6k ohm	1/4W
R143	06S41801P56	100k ohm	1/4W
R144	06S41801P56	100k ohm	1/4W
R145	06S41801P29	560 ohm	1/4W
R146	06S41801P29	560 ohm	1/4W
R147	06S41801P41	5.6k ohm	1/4W
R148	06S41801P41	5.6k ohm	1/4W
R149	06S41801P56	100k ohm	1/4W
R150	06S41801P56	100k ohm	1/4W
R151	06S41801P29	560 ohm	1/4W
R152	06S41801P29	560 ohm	1/4W
R153	06S41801P41	5.6k ohm	1/4W
R154	06S41801P41	5.6k ohm	1/4W
R201	06S41801P53	56k ohm	1/4W
R202	06S41801P53	56k ohm	1/4W
R203	06S41801P38	3.3k ohm	1/4W
R204	06S41801P38	3.3k ohm	1/4W
R205	06S40106T14	100k ohm	1/4W
R206	06S40106T14	100k ohm	1/4W
R207	06S41801P36	2.2k ohm	1/4W

Symbol No.	Part No.	Description	
R801	06S41801P24	220 ohm	1/4W
R802	06S41801P32	1k ohm	1/4W
R803	06S41801P32	1k ohm	1/4W
R804	06S41801P40	4.7k ohm	1/4W
R805	06S41801P32	1k ohm	1/4W
R806	06S41801P17	56 ohm	1/4W
R807	06S41801P44	10k ohm	1/4W
R808	06S41801P52	47k ohm	1/4W
R809	06S41801P52	47k ohm	1/4W
R901	06D44744G20	100 ohm	1/2W
R902	06S41801P41	5.6k ohm	1/4W
R903	06S41801P31	820 ohm	1/4W
R904	06S41801P44	10k ohm	1/4W
Miscellaneous Parts			
E101	01A55286F04	Input Lead (R)	
E102	01A55286F05	Input Lead (L)	
E103	01A55286F06	Ground Input Lead	
E104	30A58160F01	Assy., Remote Lead	
E201	01D45255F15	Assy., Output Connector	
E202	30T40438U08	Ground Lead	
C101, C102, C103	08T60711F01	Cap., Through 1000P	

Mechanical Parts List

Symbol No.	Part No.	Description
	General Assembly Parts	
1 5A	13E00496S01	Assy., Nosepiece
2 5A	36B51859F01	Knob, Rotary
3 5A	36B58116F01	Knob, Slide
4 2C	*	Assy., Booster P.C.B.
5 4C	61A58120F01	Lens, Crystal
6 5F	03S40011G89	Screw, Pan (M2.6x6)
8 1D	15C58119F01	Cover, Top
9 3D	*	Bracket, IC
10 3D	30T58162F01	Cable, Flat
11 4D	03S40012G22	Screw, Tapping (M2.6x6)
12 5D	*	Insulator, Fiber
13 6D	03S40011G33	Screw, Pan (M2x4)
14	03S44205G39	Screw, Countersink (M3x6)
15 3F	03S40011G22	Screw, Pan (M3x12)
16 4F	*	Heat, Sink
17	03S44205G01	Screw, Pan (M3x6)
18 5F	03S40018G02	Screw, Tapping (M3x8)
19 5F	42B41424G05	Clamp, Cord
20 5F	42B41424G02	Clamp, Cord
21 6F	*	Chassis, Base
22 6F	03S44205G03	Screw, Pan (M3x8)
23 3H	*	Tube, Vinyl UL CSA (70 mm)
24 3F	*	Tube, Vinyl UL CSA (70 mm)
25 3E	14S60723F01	Insulator, Transistor
26 4D	43A52836F15	Bushing, Panel
27 5H	*	Insulator, Fiber

* not supplied

Packing Method View

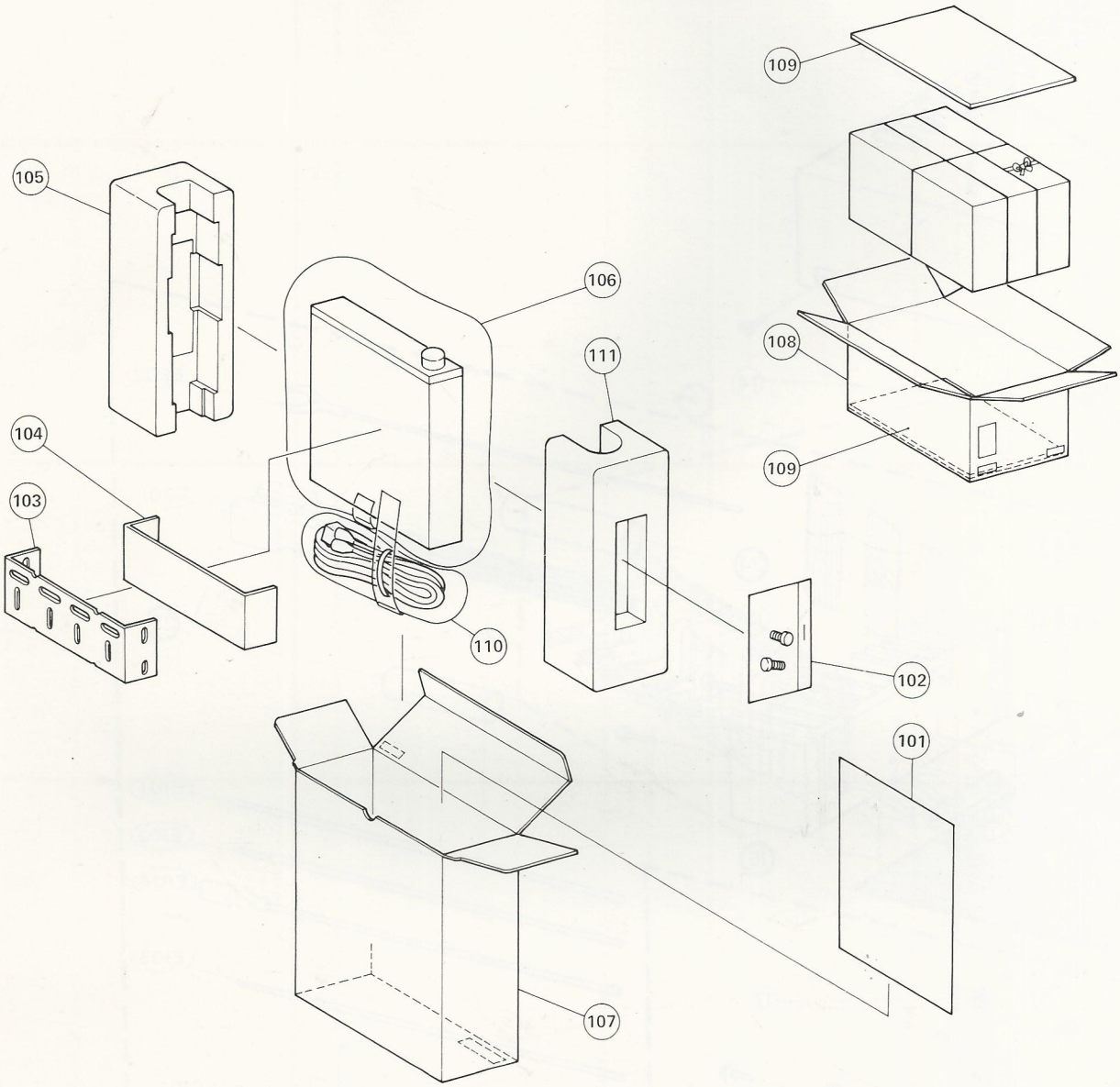

Packing Parts List

Symbol No.	Part No.	Description
	Assembly Packing Parts	
101	68P55888F68	MANUAL, OWNER'S
102	01V53500F20	Assy., Kit Installation
102-1	*	Screw, Tapping (M5x20)
102-2	*	Screw, Hex. Washer (M4x8)
102-3	*	Sack, Polyethylene
103	07B51862F01	Bracket, "U" Mounting
104	56A51863F01	Pad, Sheet
105	56C60877F02	Tray, Packing (R)
106	56B40990T21	Sack, Polyethylene
107	56C40409F29	Carton, Packing (Ind.)
108	*	Carton, Packing (Master)
109	*	Pad, Packing
110	01D45256F16	Assy., Wire Kit
111	56C60877F01	Tray, Packing (L)
Labels		
	54B42124G01	Label, Model No. (Ind., Master Carton)
	54A58168F01	Label, Composite (Chassis, Bottom)
	54A61193F01	Label, Korea (Cover, Rear)

* not supplied

Semiconductors Lead Identifications

(μPC324C) IC101, IC102, IC103, IC104

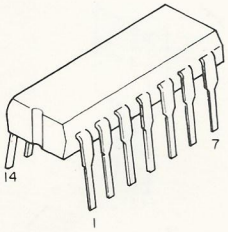

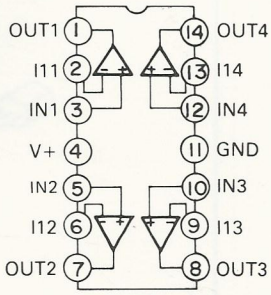

(MB3731) IC201, IC202

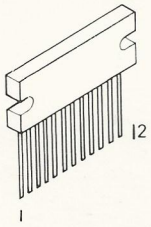

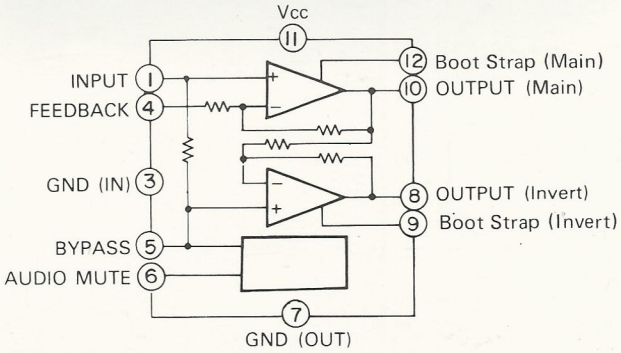

(BA6144) IC901

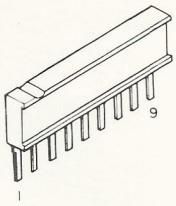

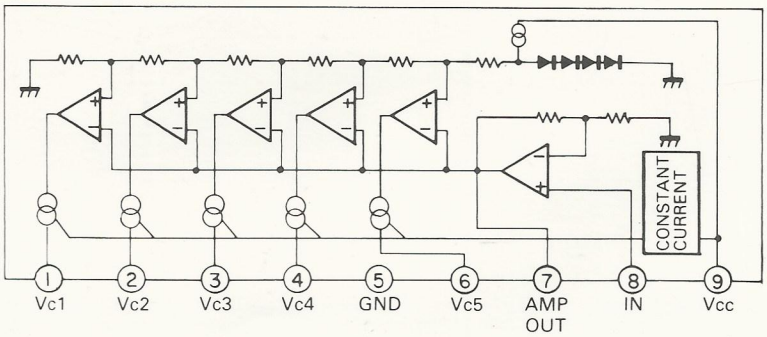
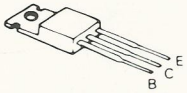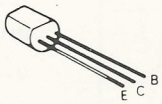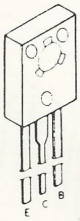
(2SA1011D) Q801	(2SC1815Y) Q802	(2SC894) Q803