ALPINE SERVICE MANUAL

Computer Equalizer

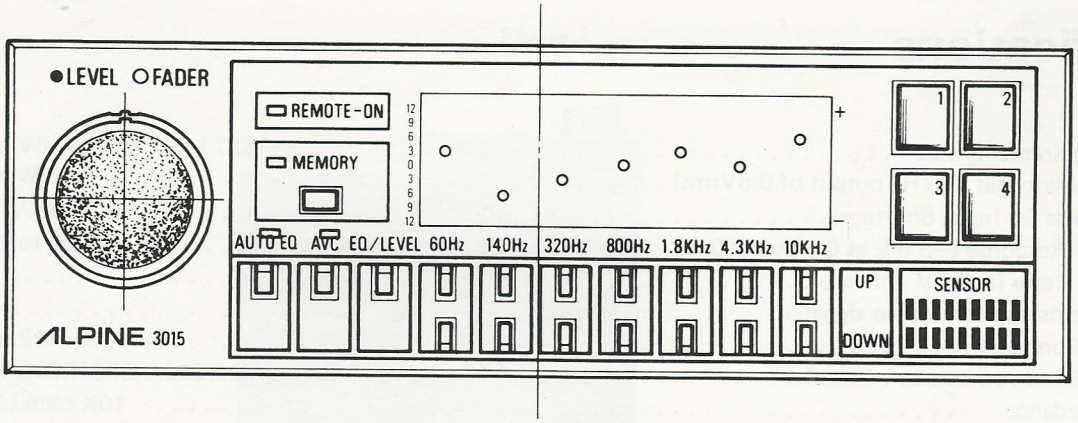

3015

Contents

Specifications 2
Parts Locations and Disassembly Instructions . . . . . 3 to 5
Adjustment Procedures. 6
Adjustment Locations 6
Block Diagram 7
Packing Method View. 8
Packing Parts List 8
Parts Layout on P.C. Boards . . . . . 9 to 14
Wiring Diagram . . . . . 15 to 16
Schematic Diagram (1/2) . . . . . 17 to 18
Schematic Diagram (2/2) . . . . . 19 to 20
Electrical Parts List . . . . . 21 to 29
Cabinet Parts List 30
Exploded View (Cabinet) . . . . . 31 to 32
Semi-Conductor Lead Identificaitons . . . . . 33 to 39

Specifications

Power Requirement	DC 14.0V (11 to 16V allowable)
Input Sensitivity (at 800 Hz output of 0.6Vrms)	0.6Vrms ±2 dB
Output Noise (at Input Shortage)	1.5mV/10K ohm
Frequency Response (–3 dB, at Output of 0.6V, rms)	60 to 20,000 Hz
Distortion Ratio (at 0.6V rms/ch)	1%
Current Comsumption (at No signal)	600mA
Equalizer Control	±12 dB (±3 dB)
Equalizer Band	60/140/320/800/1,800/4,300/10,000 Hz
Input Impedance	10K ohm (±2K ohm)
Channel Separation	40 dB
AVC Range	+6 dB
Auto EQ Pink Noise Output Level	0 to 500mV
Auto EQ Standard Frequency	800 Hz
Dimensions	160(W) x 50(H) x 140(D) mm
Weight	1.1 kg

Note: For future improvement, specifications and design are subject to change without notice.

Parts Locations and Disassembly Instructions

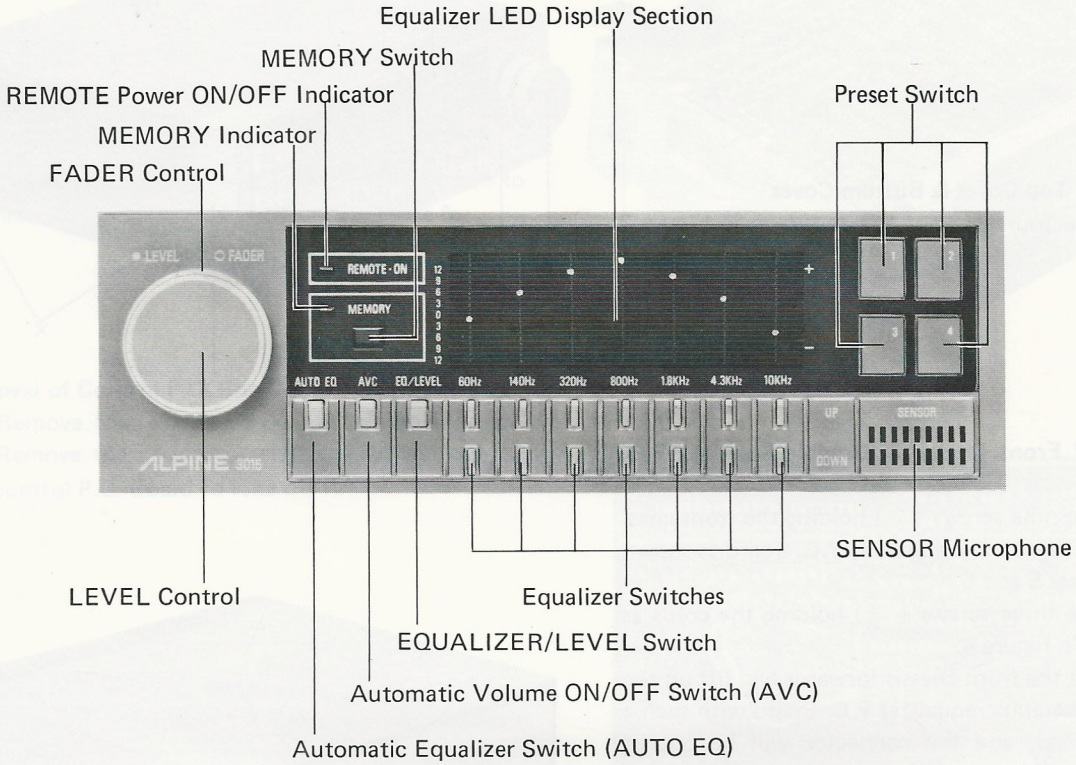

Figure 1

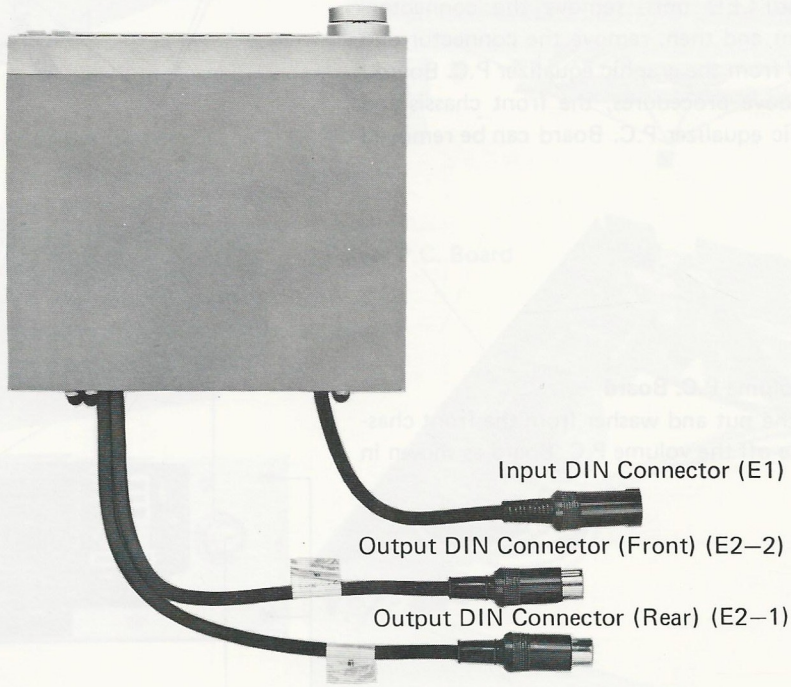

Figure 2

1. Removal of Nose Pice

(1) Remove FADER control and LEVEL control knobs.

(2) Remove two screws (○) as shown in Figures 3 and 4.

2. Removal of Top Cover & Buttom Cover

(1) Remove four screws (x) as shown in Figure 3 and 4.

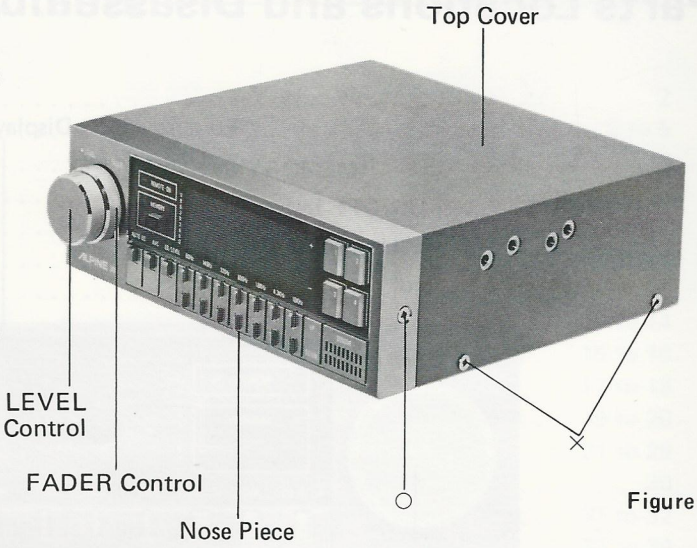

Figure 3

3. Removal of Front Chassis & Graphic Equalizer P.C. Board

(1) Remove nine screws (□) holding the front chassis and the graphic equalizer P.C. Board as shown in Figures 5 and 6.

(2) Remove three screws (△) holding the cords as shown in Figure 4.

(3) Pull out the front chassis forwards and lift up the back of graphic equalizer P.C. Board with such a screwdriver, and the connector will be out of place. In this case, take care of lead wires.

(4) Since the front chassis is fixed with the volume P.C. Board, sensor microphone, key board P.C. Board and LED unit, remove the connectors from them and then, remove the connector and lead wires from the graphic equalizer P.C. Board.

(5) Due to above procedures, the front chassis and the graphic equalizer P.C. Board can be removed out.

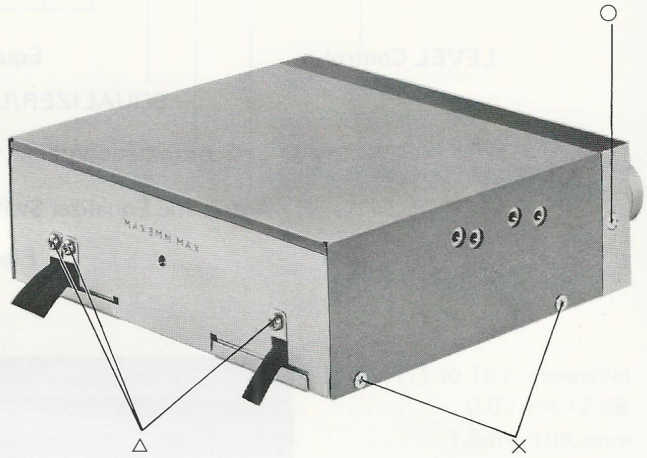

Figure 4

4. Removal of Volume P.C. Board

(1) Remove the nut and washer from the front chassis to take off the volume P.C. Board as shown in Figure 5.

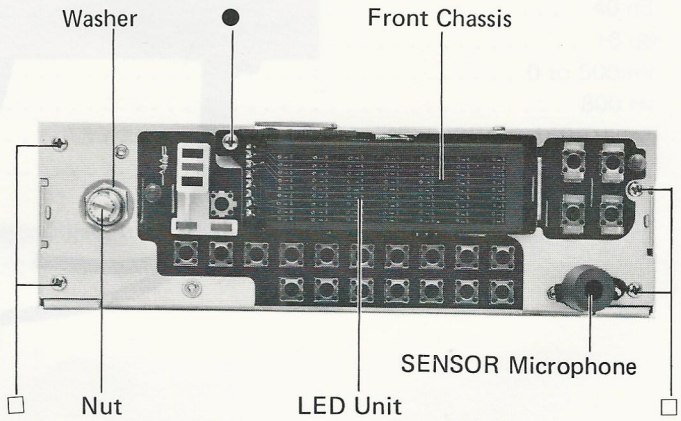

Figure 5

5. Removal of Key Board P.C. Board

(1) Remove three screws (※) from the rear of front chassis to take off the key board P.C. Board as shown in Figure 8.

6. Removal of LED Unit

(1) Remove one screw (●) from the front chassis to take off the LED unit as shown in Figure 5.

7. Removal of Control P.C. Board

(1) Remove four screws (■) as shown in Figures 7.

(2) Remove the connector and lead wires from the control P.C. Board to take off it.

8. Removal of Power P.C. Board

(1) Remove two screws (▲) as shown in Figures 6 and 9.

(2) Remove the connector and lead wires from the power P.C. Board to take off it.

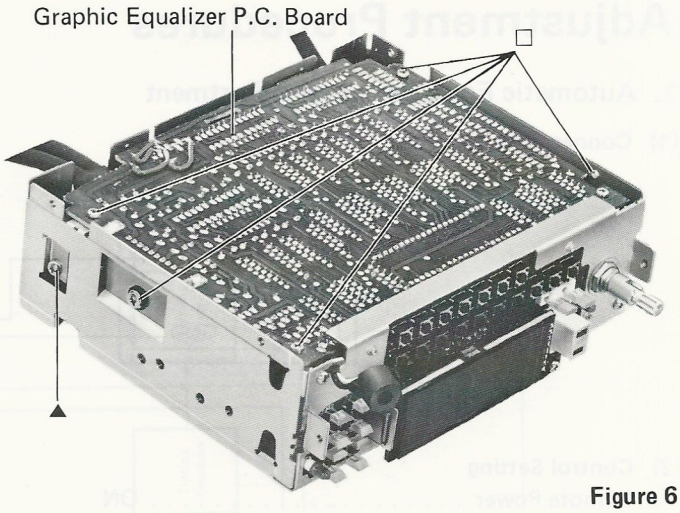

Figure 6

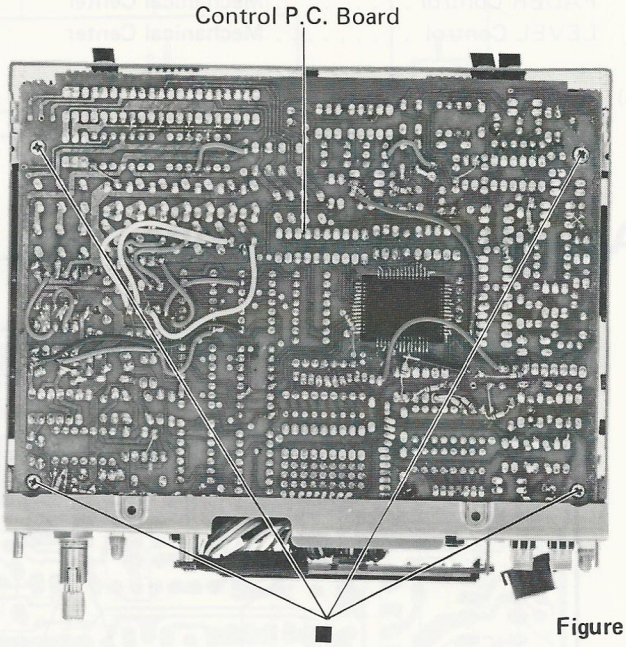

Figure 7

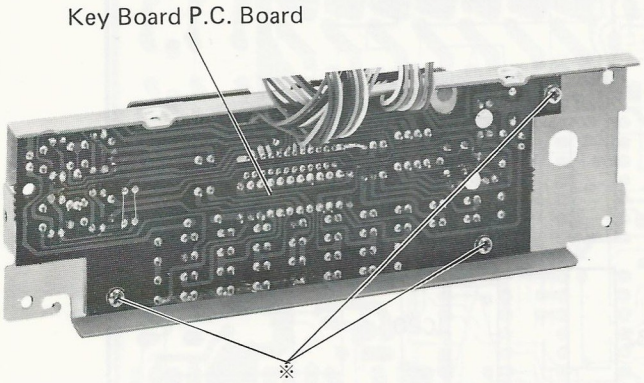

Figure 8

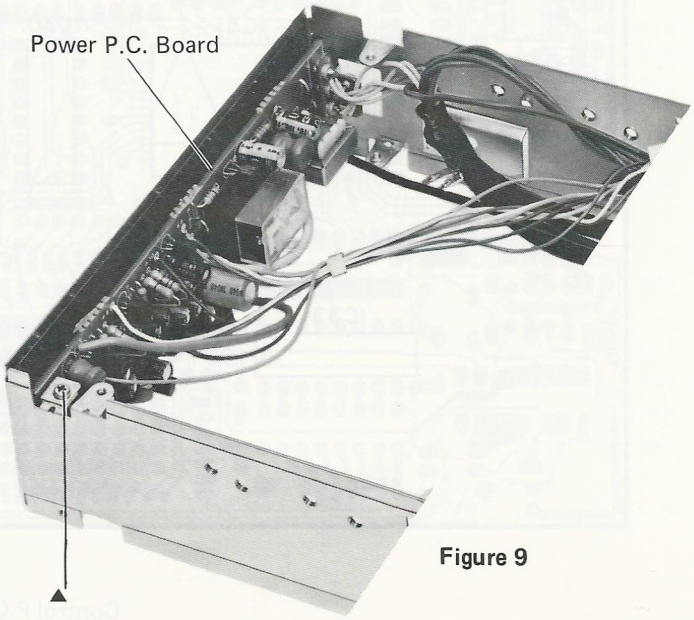

Figure 9

Adjustment Procedures

1. Automatic Equalizer Level Adjustment

(1) Connection

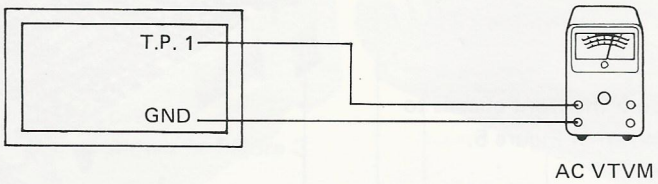

(2) Control Setting

Remote Power . . . . . ON
FADER Control . . . . . Mechanical Center
LEVEL Control . . . . . Mechanical Center

(3) Adjustment Procedure

Adjust VR4 to 17.5 ±2.5mV at the voltage level of T.P.1 (7th pin of IC35).

Adjustment Locations

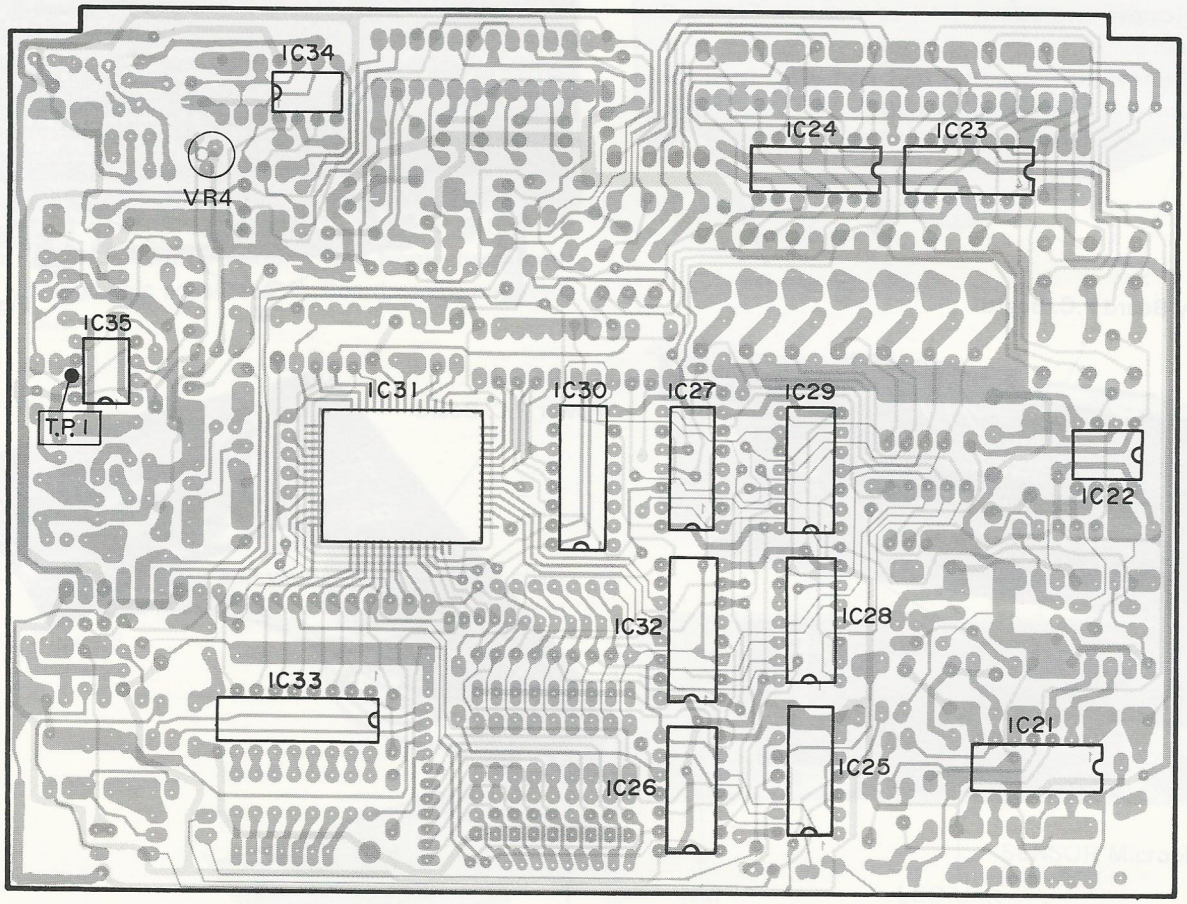

Control P.C. Board

Block Diagram

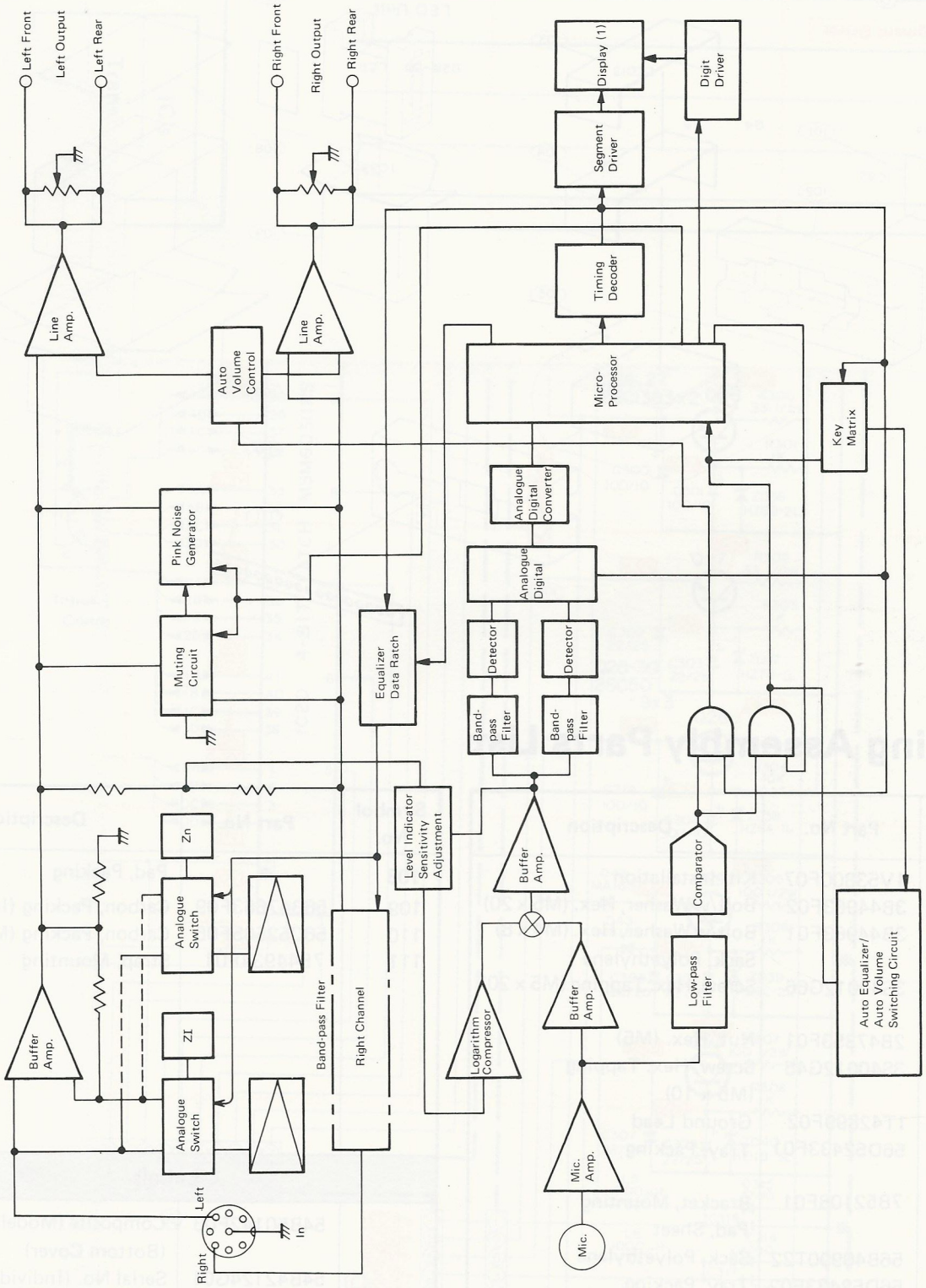

Packing Method View

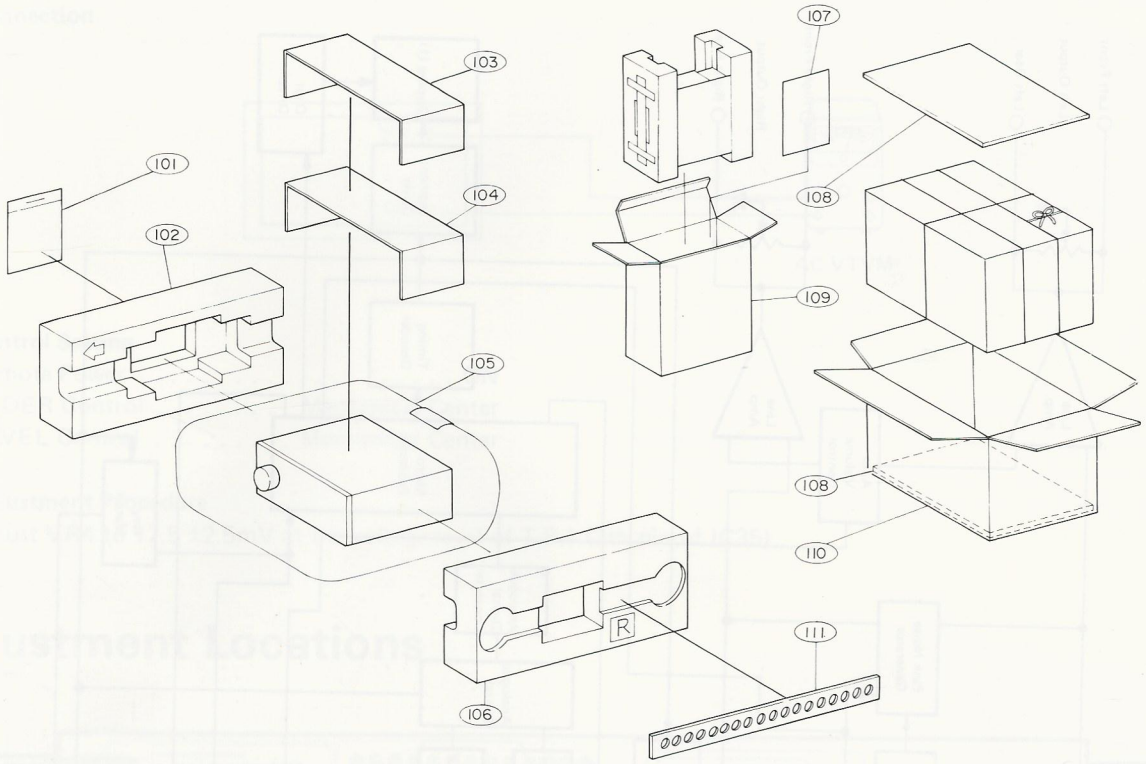

Packing Assembly Parts List

Symbol No.	Part No.	Description
101	1V53800F07	Kit, Installation
101-1	3B44963F02	Bolt/w Washer, Hex. (M5 x 20)
101-2	3B44963F01	Bolt/w Washer, Hex. (M4 x 8)
101-3	※	Sack, Polyethylene
101-4	3S40012G66	Screw, Hex. Tapping (M5 x 20)
101-5	2B47353F01	Nut, Hex. (M5)
101-6	3S40012G45	Screw, Hex. Tapping (M5 x 10)
101-7	1T42899F02	Ground Lead
102	56D52433F01	Tray, Packing
103	7B52108F01	Bracket, Mounting
104	※	Pad, Sheet
105	56B40990T22	Sack, Polyethylene
106	56D52433F02	Tray, Packing
107	68P55888F16	Manual, Owner's

Symbol No.	Part No.	Description
108	※	Pad, Packing
109	56B47663F09	Carbon, Packing (Individual)
110	56C52565F06	Carbon, Packing (Master)
111	7B44934F01	Strap, Mounting
Labels		
	54B50142F06	Composite (Model, Serial No.) (Bottom Cover)
	54B42124G01	Serial No. (Individual)
	※	Manufacture Date (Master)
	※	Serial No. (Master Carton)

※ Parts without part number are not supplied.

Parts Layout on P.C. Boards

- **Control P.C. Board**

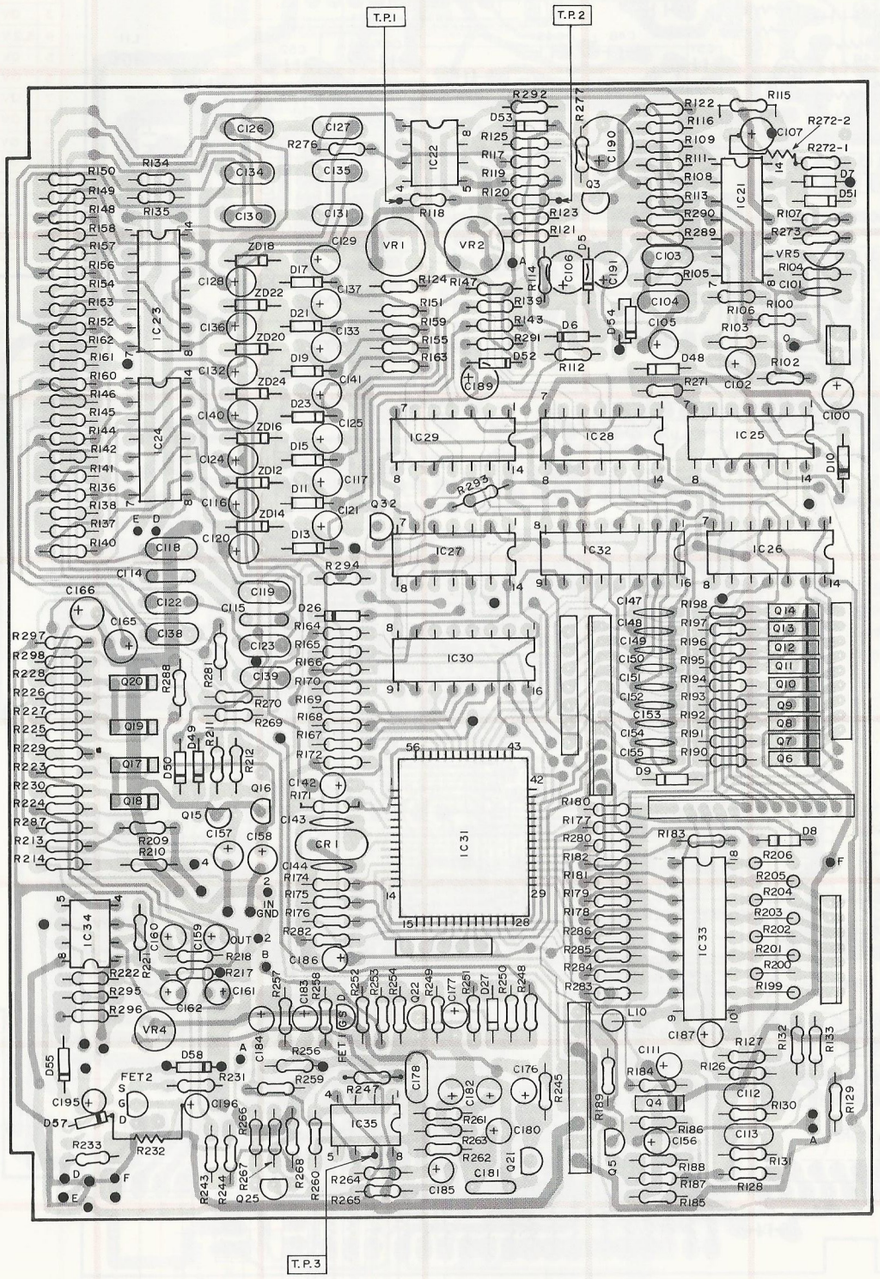

Top View

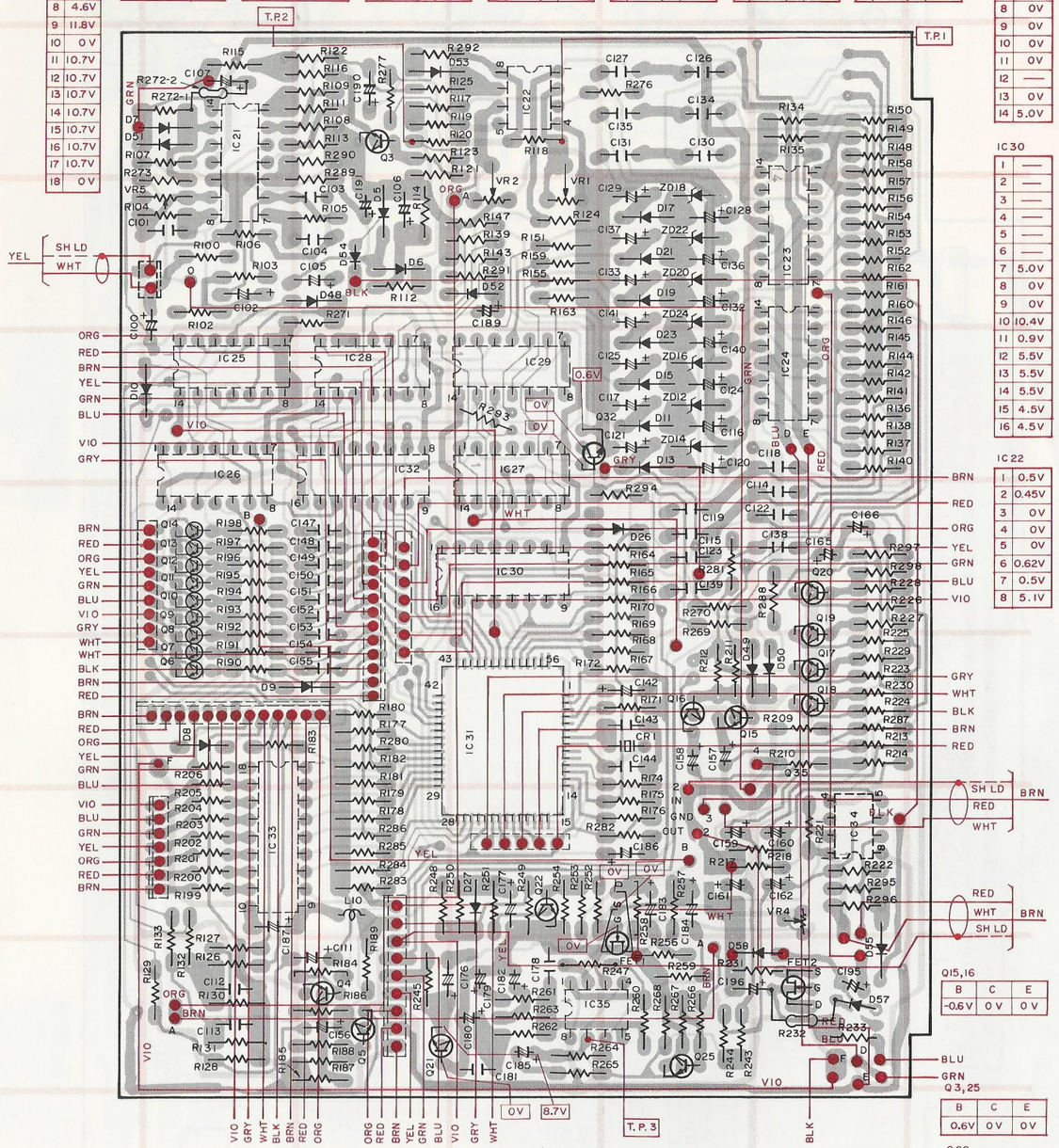

IC33

1	0V		
2	1.0V		
3	1.0V		
4	1.0V		
5	4.6V		
6	4.6V		
7	4.6V		
8	4.6V		
9	11.8V		
10	0V		
11	10.7V		
12	10.7V		
13	10.7V		
14	10.7V		
15	10.7V		
16	10.7V		
17	10.7V		
18	0V		

IC21

1	0.1V	8	0V
2	0V	9	0V
3	0V	10	0V
4	5.1V	11	-5.9V
5	0V	12	0V
6	0V	13	0V
7	0.1V	14	0.1V

IC23

1	0.1V	8	0V
2	0V	9	0V
3	0V	10	0V
4	5.2V	11	-6V
5	0V	12	0V
6	0V	13	0V
7	0V	14	0V

IC24

1	0V	8	0V
2	0V	9	0V
3	0V	10	0V
4	5.2V	11	-6V
5	0V	12	0V
6	0V	13	0V
7	0V	14	0V

IC25

1	0V	8	0V
2	5.5V	9	5.5V
3	0V	10	0V
4	0V	11	0V
5	5.5V	12	5.5V
6	0V	13	0V
7	—	14	5.5V

IC26

1	0V	8	—
2	—	9	0V
3	0V	10	0V
4	0V	11	0V
5	0V	12	—
6	—	13	4.6V
7	—	14	5.0V

IC27

1	1.0V	8	1.0V
2	—	9	0V
3	0V	10	0V
4	—	11	0V
5	—	12	0V
6	1.0V	13	1.0V
7	0V	14	5.0V

IC28

1	0V	8	0V
2	0V	9	0V
3	0V	10	0V
4	0V	11	0V
5	—	12	—
6	—	13	—
7	0V	14	5.0V

IC29

1	0V
2	0.6V
3	0V
4	0V
5	—
6	—
7	0V
8	0V
9	0V
10	0V
11	0V
12	—
13	0V
14	5.0V

IC30

1	—
2	—
3	—
4	—
5	—
6	—
7	5.0V
8	0V
9	0V
10	10.4V
11	0.9V
12	5.5V
13	5.5V
14	5.5V
15	4.5V
16	4.5V

IC22

1	BRN	0.5V
2	RED	0.45V
3	ORG	0V
4	YEL	0V
5	GRN	0V
6	BLU	0.62V
7	VIO	0.5V
8	VIO	5.1V

VIO	GRY	WHT	BLK	BRN	RED	ORG		ORG	RED	BRN	YEL	GRN	BLU	VIO	GRY	WHT							

IC31

2	5.0V	8	—	14	0V	23	5.5V	28	4.6V	32	1.0V	36	0V	45	—	49	5.5V	53	5.5V
4	4.5V	11	0V	19	0V	24	0V	29	4.6V	33	0V	38	5.1V	46	—	50	0.9V		
6	5.1V	12	0V	20	0V	26	4.6V	30	1.0V	34	—	39	4.5V	47	—	51	5.5V		
7	—	13	0V	22	0V	27	4.6V	31	1.0V	35	—	40	4.5V	48	—	52	5.5V		

IC34

1	0V	5	0V
2	0V	6	0V
3	0V	7	0V
4	-6V	8	5.2V

IC35

1	0V	5	0V
2	0V	6	0V
3	0V	7	0.1V
4	-6V	8	5.2V

Q15,16

B	C	E
-0.6V	0V	0V

Q3,25

B	C	E
0.6V	0V	0V

Q22

B	C	E
3.3V	2.0V	0V

Q4

B	C	E
4.3V	4.9V	5.0V

Q5

B	C	E
0.65V	0V	0V

Q6～10

B	C	E
0.12V	—	0V

Q11～14

B	C	E
0.1V	—	0V

Q17～20

B	C	E
-0.4V	0V	0V

Q35

B	C	E
0V	0V	0V

Bottom View

3015

- **Graphic Equalizer P.C. Board**

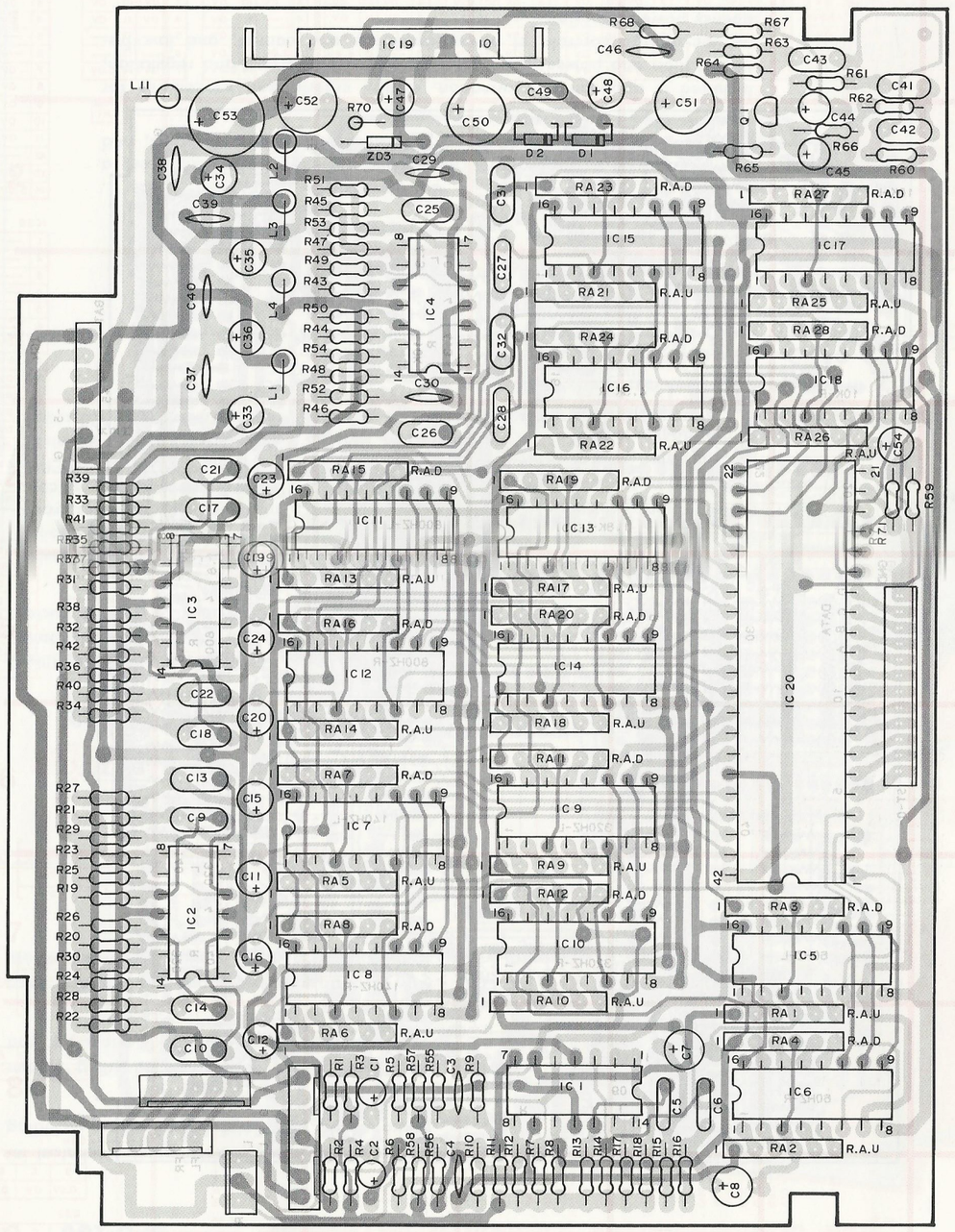

Top View

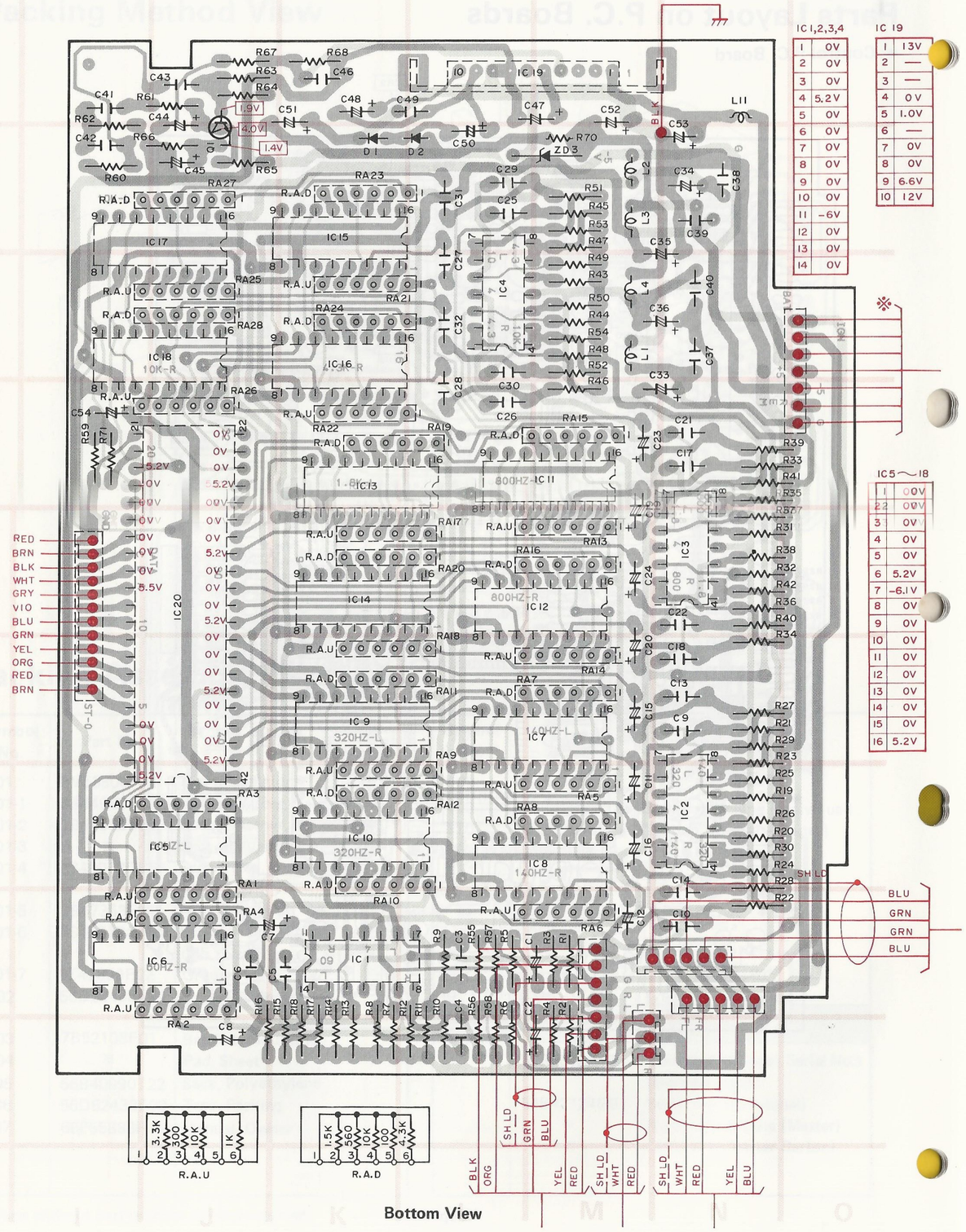

Bottom View

• Key Board P.C. Board

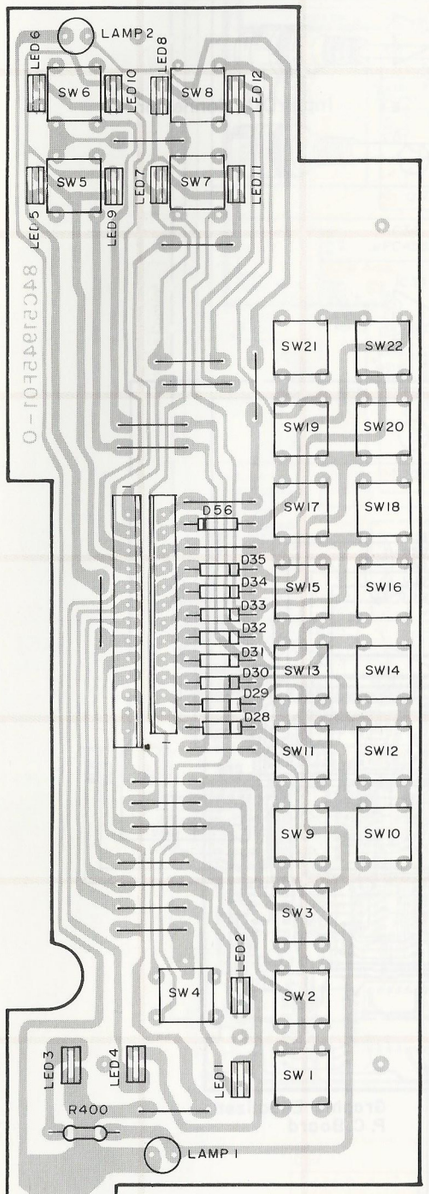

Top View

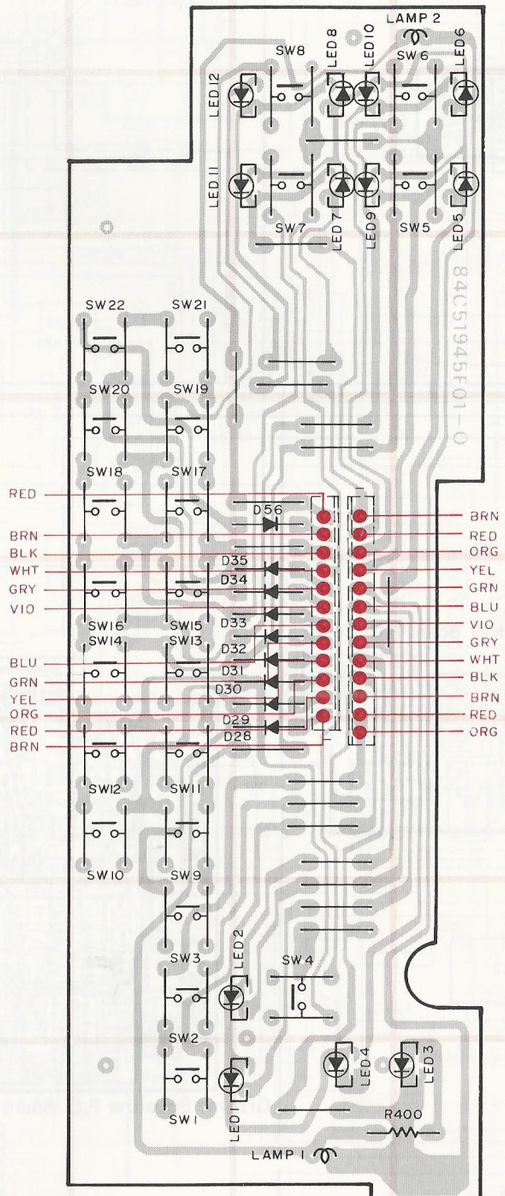

Bottom View

• Power P.C. Board

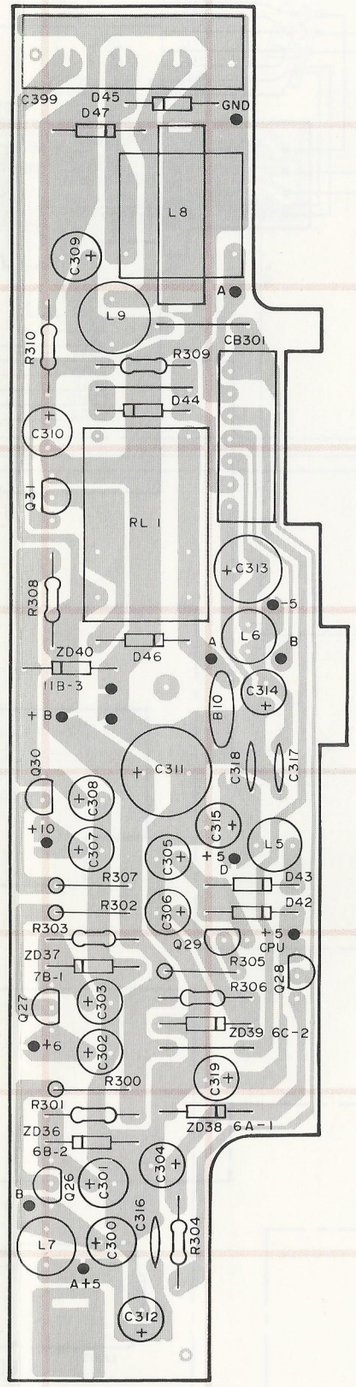

Top View

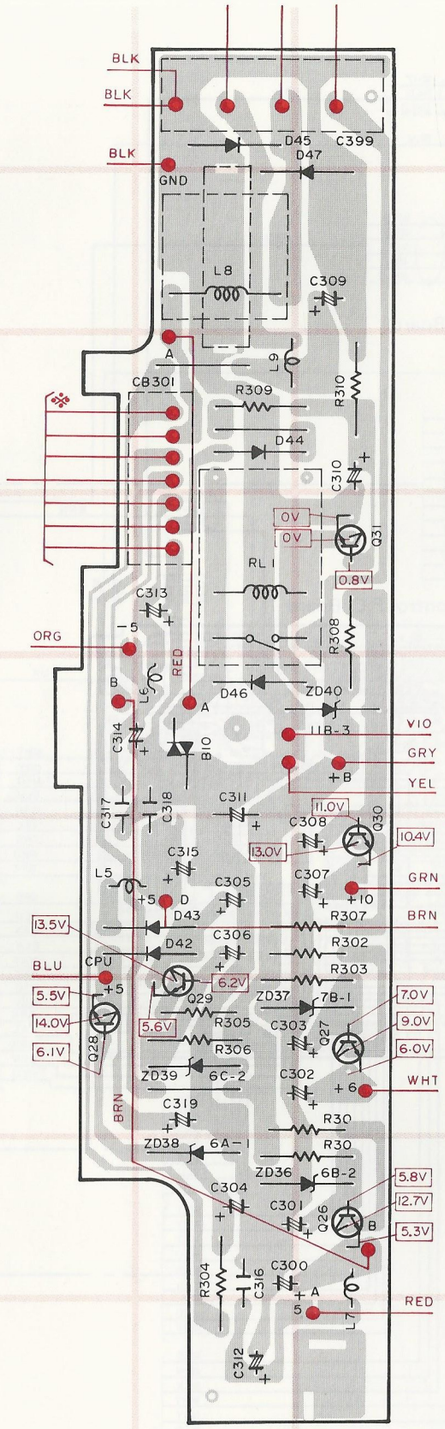

Bottom View

• Volume P.C. Board

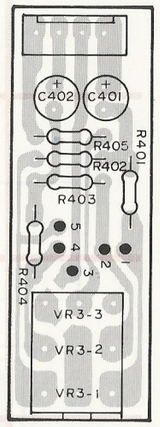

Top View

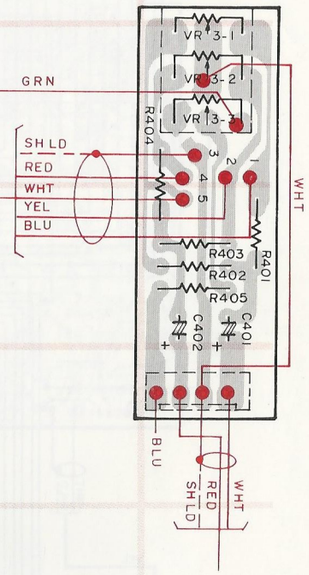

Bottom View

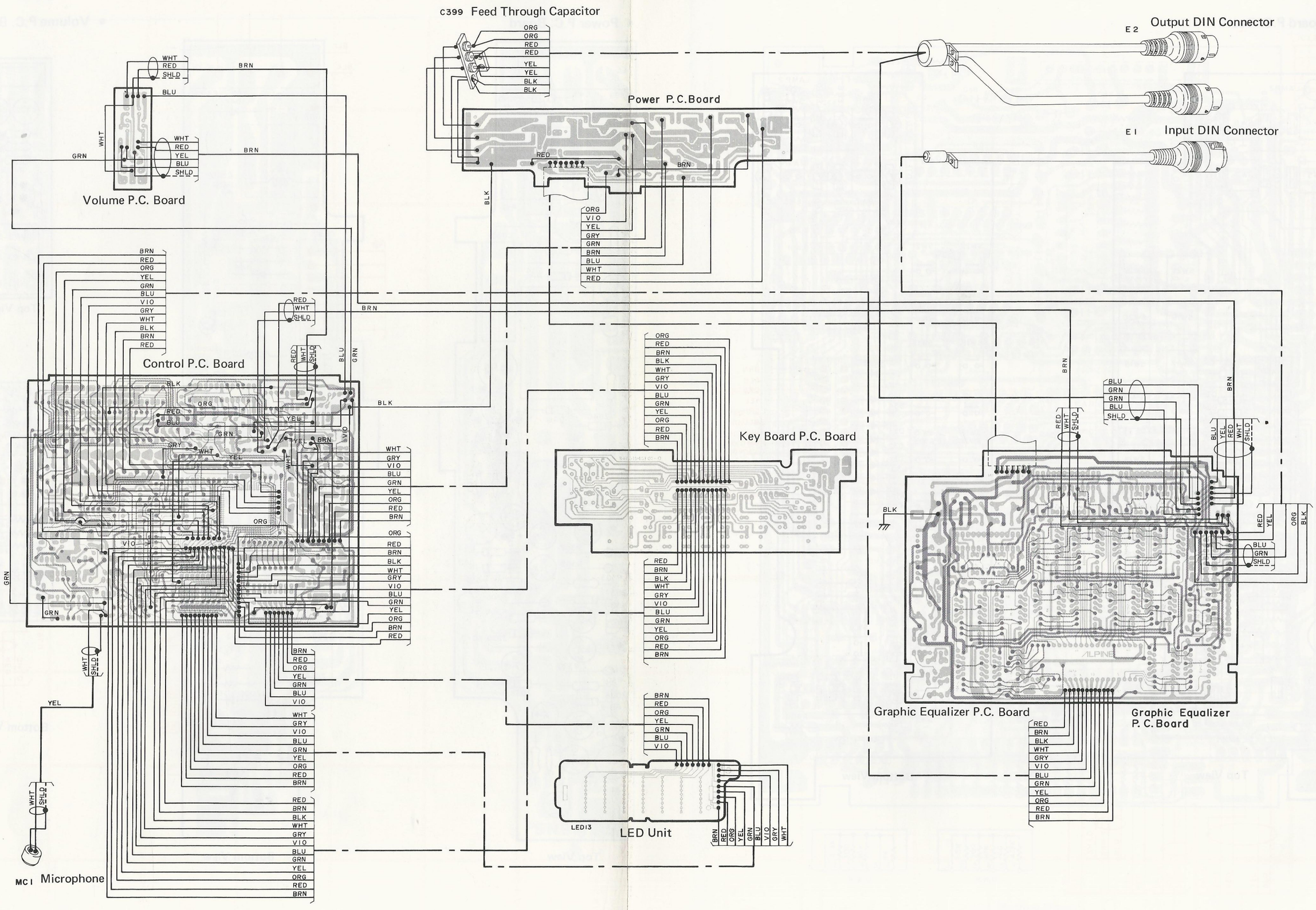
C399 Feed Through Capacitor
Output DIN Connector
E2
Input DIN Connector
E1
Power P.C.Board
Volume P.C. Board
Control P.C. Board
Key Board P.C. Board
Graphic Equalizer P.C. Board
Graphic Equalizer P.C. Board
LED13
LED Unit
MC1 Microphone

Schematic Diagram (1/2)

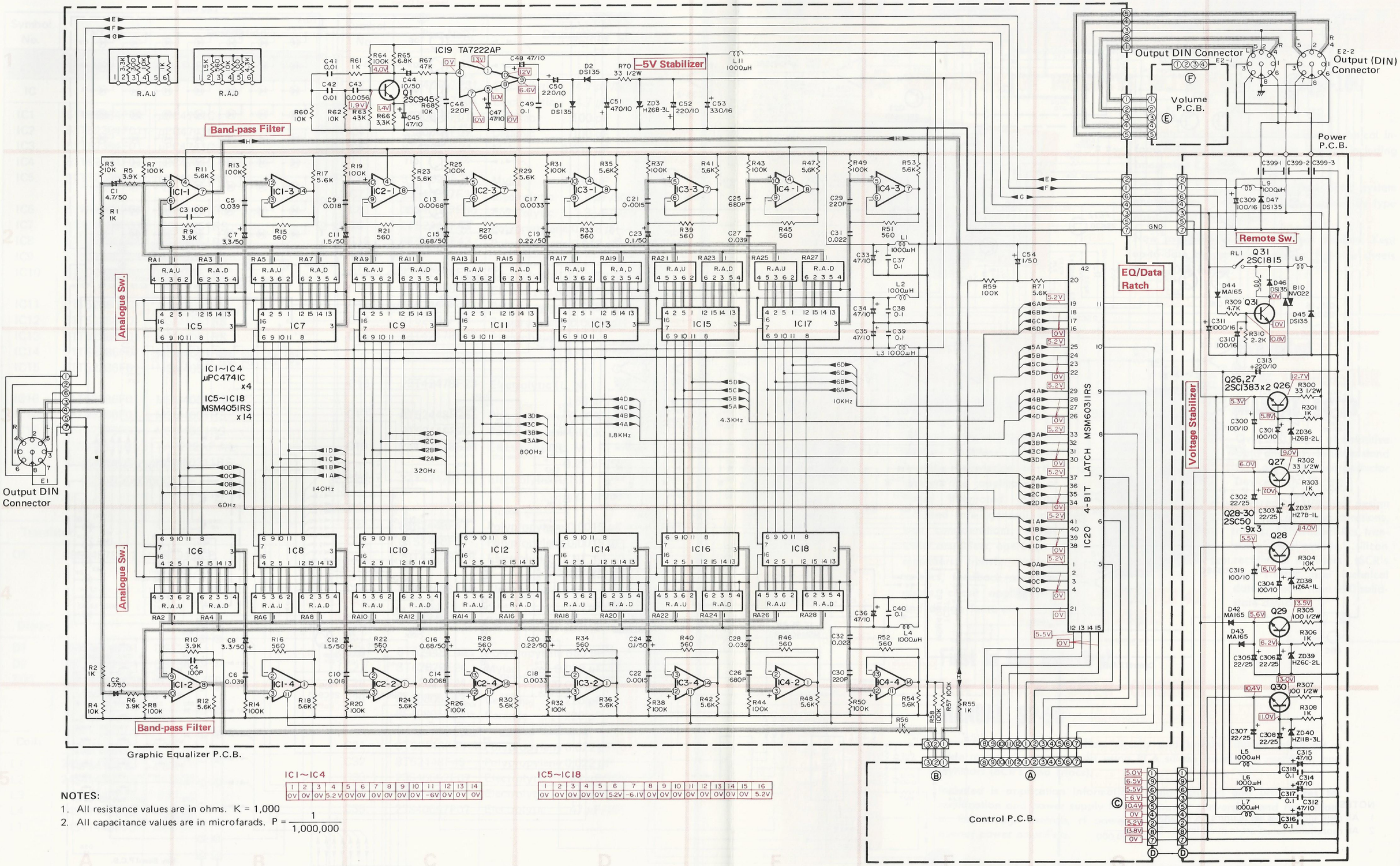

IC1~IC4

1	2	3	4	5	6	7	8	9	10	11	12	13	14
0V	0V	0V	5.2V	0V	0V	0V	0V	0V	0V	-6V	0V	0V	0V

IC5~IC18

1	2	3	4	5	6	7	8	9	10	11	12	13	14	15	16
0V	0V	0V	0V	0V	5.2V	-6.1V	0V	0V	0V	0V	0V	0V	0V	0V	5.2V

NOTES:

1. All resistance values are in ohms. K = 1,000
2. All capacitance values are in microfarads. $P = \frac{1}{1,000,000}$

Schematic Diagram (2/2)

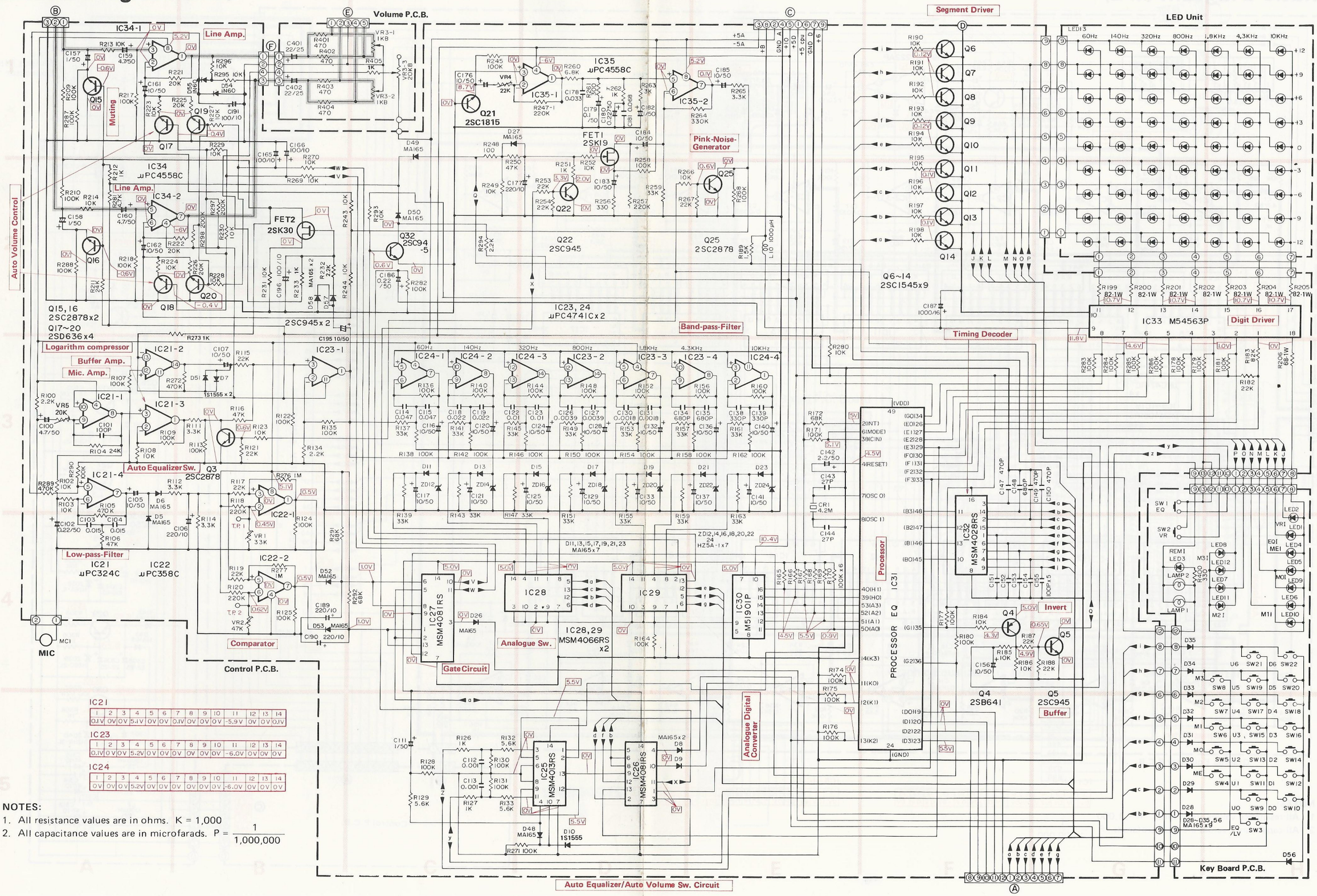

IC21

1	2	3	4	5	6	7	8	9	10	11	12	13	14
0.1V	0V	0V	5.1V	0V	0V	0.1V	0V	0V	0V	-5.9V	0V	0V	0.1V

IC23

1	2	3	4	5	6	7	8	9	10	11	12	13	14
0.1V	0V	0V	5.2V	0V	0V	0V	0V	0V	0V	-6.0V	0V	0V	0V

IC24

1	2	3	4	5	6	7	8	9	10	11	12	13	14
0V	0V	0V	5.2V	0V	0V	0V	0V	0V	0V	-6.0V	0V	0V	0V

NOTES:

1. All resistance values are in ohms. K = 1,000
2. All capacitance values are in microfarads. $P = \frac{1}{1,000,000}$

Electrical Parts List

Resistors rated 1/8W may be replaced with those rated 1/6W.
μF = microfarads, pF = picofarads

Symbol No.	Part No.	Description
Graphic Equalizer P.C. Board		
IC		
IC1	51T52384F01	μPC4741C
IC2	51T52384F01	μPC4741C
IC3	51T52384F01	μPC4741C
IC4	51T52384F01	μPC4741C
IC5	51T52386F01	MSM4051RS
IC6	51T52386F01	MSM4051RS
IC7	51T52386F01	MSM4051RS
IC8	51T52386F01	MSM4051RS
IC9	51T52386F01	MSM4051RS
IC10	51T52386F01	MSM4051RS
IC11	51T52386F01	MSM4051RS
IC12	51T52386F01	MSM4051RS
IC13	51T52386F01	MSM4051RS
IC14	51T52386F01	MSM4051RS
IC15	51T52386F01	MSM4051RS
IC16	51T52386F01	MSM4051RS
IC17	51T52386F01	MSM4051RS
IC18	51T52386F01	MSM4051RS
IC19	51S40947T01	TA7222AP-AL
IC20	51T52391F01	MSM60311RS
Transistor		
Q1	48S44578J01	2SC945L-P
Diodes		
D1	48T44992F01	DS135D
D2	48T44992F01	DS135D
ZD3	48T40059U06	Zener, HZ6B-3L
Coils		
L1	24S41448F73	1000 μH
L2	24S41448F73	1000 μH
L3	24S41448F73	1000 μH
L4	24S41448F73	1000 μH
L11	24S41448F73	1000 μH

Symbol No.	Part No.	Description
Capacitors		
C1	23S40657F31	Electrolytic 4.7 μF/50V
C2	23S40657F31	Electrolytic 4.7 μF/50V
C3	8S40805F01	Ceramic 100 pF
C4	8S40805F01	Ceramic 100 pF
C5	8T42629F24	Mylar 0.039 μF
C6	8T42629F24	Mylar 0.039 μF
C7	23S40657F30	Electrolytic 3.3 μF/50V
C8	23S40657F30	Electrolytic 3.3 μF/50V
C9	8T52448F43	Polypropylene 0.018 μF
C10	8T52448F43	Polypropylene 0.018 μF
C11	23T42478F25	Electrolytic (L,N) 1.5μF/50V
C12	23T42478F25	Electrolytic (L,N) 1.5μF/50V
C13	8T52448F33	Polypropylene 0.0068 μF
C14	8T52448F33	Polypropylene 0.0068 μF
C15	23T42478F23	Electrolytic (L, N) 0.68 μF/50V
C16	23T42478F23	Electrolytic (L, N) 0.68 μF/50V
C17	8T52448F25	Polypropylene 0.0033 μF
C18	8T52448F25	Polypropylene 0.0033 μF
C19	23T42478F20	Electrolytic (L, N) 0.22 μF/50V
C20	23T42478F20	Electrolytic (L,N) 0.22 μF/50V
C21	8T52448F17	Polypropylene 0.0015 μF
C22	8T52448F17	Polypropylene 0.0015 μF
C23	23T42478F18	Electrolytic (L, N) 0.1 μF/50V
C24	23T42478F18	Electrolytic (L, N) 0.1 μF/50V
C25	8T52448F09	Polypropylene 680 pF
C26	8T52448F09	Polypropylene 680 pF
C27	8T42629F24	Mylar 0.039 μF
C28	8T42629F24	Mylar 0.039 μF
C29	8S40805F03	Ceramic 220 pF
C30	8S40805F03	Ceramic 220 pF
C31	8T52448F45	Polypropylene 0.022 μF
C32	8T52448F45	Polypropylene 0.022 μF
C33	23S40657F07	Electrolytic 47 μF/10V
C34	23S40657F07	Electrolytic 47 μF/10V
C35	23S40657F07	Electrolytic 47 μF/10V

Symbol No.	Part No.	Description
C36	23S40657F07	Electrolytic 47 μF/10V
C37	8T44979P14	Ceramic 0.1 μF
C38	8T44979P14	Ceramic 0.1 μF
C39	8T44979P14	Ceramic 0.1 μF
C40	8T44979P14	Ceramic 0.1 μF
C41	8T44481F37	Polypropylene 0.01 μF
C42	8T44481F37	Polypropylene 0.01 μF
C43	8T52448F31	Polypropylene 0.0056 μF
C44	23S41198U12	Electrolytic 10 μF/50V
C45	23S40657F07	Electrolytic 47 μF/10V
C46	8S40805F03	Ceramic 220 pF
C47	23S40657F07	Electrolytic 47 μF/10V
C48	23S40657F07	Electrolytic 47 μF/10V
C49	8T42629F29	Mylar 0.1 μF
C50	23S40657F09	Electrolytic 220 μF/10V
C51	23T43707U09	Electrolytic 470 μF/10V
C52	23S40657F09	Electrolytic 220 μF/10V
C53	23T43707U07	Electrolytic 330 μF/16V
C54	23S41198U03	Electrolytic 1 μF/50V
Resistors (All resistors are carbon film, ±5%, 1/8W unless otherwise noted.)		
R1	6T43159F65	1K ohm
R2	6T43159F65	1K ohm
R3	6T43159F89	10K ohm
R4	6T43159F89	10K ohm
R5	6T43159F79	3.9K ohm
R6	6T43159F79	3.9K ohm
R7	6T43160F14	100K ohm
R8	6T43160F14	100K ohm
R9	6T43159F79	3.9K ohm
R10	6T43159F79	3.9K ohm
R11	6T43159F83	5.6K ohm
R12	6T43159F83	5.6K ohm
R13	6T43160F14	100K ohm
R14	6T43160F14	100K ohm
R15	6T43159F59	560 ohm
R16	6T43159F59	560 ohm
R17	6T43159F83	5.6K ohm
R18	6T43159F83	5.6K ohm
R19	6T43160F14	100K ohm
R20	6T43160F14	100K ohm

Symbol No.	Part No.	Description
R21	6T43159F59	560 ohm
R22	6T43159F59	560 ohm
R23	6T43159F83	5.6K ohm
R24	6T43159F83	5.6K ohm
R25	6T43160F14	100K ohm
R26	6T43160F14	100K ohm
R27	6T43159F59	560 ohm
R28	6T43159F59	560 ohm
R29	6T43159F83	5.6K ohm
R30	6T43159F83	5.6K ohm
R31	6T43160F14	100K ohm
R32	6T43160F14	100K ohm
R33	6T43159F59	560 ohm
R34	6T43159F59	560 ohm
R35	6T43159F83	5.6K ohm
R36	6T43159F83	5.6K ohm
R37	6T43160F14	100K ohm
R38	6T43160F14	100K ohm
R39	6T43159F59	560 ohm
R40	6T43159F59	560 ohm
R41	6T43159F83	5.6K ohm
R42	6T43159F83	5.6K ohm
R43	6T43160F14	100K ohm
R44	6T43160F14	100K ohm
R45	6T43159F59	560 ohm
R46	6T43159F59	560 ohm
R47	6T43159F83	5.6K ohm
R48	6T43159F83	5.6K ohm
R49	6T43160F14	100K ohm
R50	6T43160F14	100K ohm
R51	6T43159F59	560 ohm
R52	6T43159F59	560 ohm
R53	6T43159F83	5.6K ohm
R54	6T43159F83	5.6K ohm
R55	6T43159F65	1K ohm
R56	6T43159F65	1K ohm
R57	6T43160F14	100K ohm
R58	6T43160F14	100K ohm
R59	6S41043U14	100K ohm
R60	6S41042U89	10K ohm
R61	6T43159F65	1K ohm
R62	6S41042U89	10K ohm
R63	6T43160F05	43K ohm
R64	6T43160F14	100K ohm
R65	6T43159F85	6.8K ohm

Symbol No.	Part No.	Description
R66	6T43159F77	3.3K ohm
R67	6T43160F06	47K ohm
R68	6T43159F89	10K ohm
R70	6D44744G14	33 ohm 1/2W
R71	6T43159F83	5.6K ohm
Array Resistors		
RA1	6T52504F01	(U)
RA2	6T52504F01	(U)
RA3	6T52505F01	(D)
RA4	6T52505F01	(D)
RA5	6T52504F01	(U)
RA6	6T52504F01	(U)
RA7	6T52505F01	(D)
RA8	6T52505F01	(D)
RA9	6T52504F01	(U)
RA10	6T52504F01	(U)
RA11	6T52505F01	(D)
RA12	6T52505F01	(D)
RA13	6T52504F01	(U)
RA14	6T52504F01	(U)
RA15	6T52505F01	(D)
RA16	6T52505F01	(D)
RA17	6T52504F01	(U)
RA18	6T52504F01	(U)
RA19	6T52505F01	(D)
RA20	6T52505F01	(D)
RA21	6T52504F01	(U)
RA22	6T52504F01	(U)
RA23	6T52505F01	(D)
RA24	6T52505F01	(D)
RA25	6T52504F01	(U)
RA26	6T52504F01	(U)
RA27	6T52505F01	(D)
RA28	6T52505F01	(D)

Symbol No.	Part No.	Description
Control P.C. Board		
IC		
IC21	51T44289U01	μPC324C
IC22	51T52385F01	μPC358C
IC23	51T52384F01	μPC4741C
IC24	51T52384F01	μPC4741C
IC25	51T52390F01	MSM4013RS
or	51T40389U01	MC14013BCP
IC26	51T52389F01	MSM4081RS
or	51T52157F01	MC14081BCP
IC27	51T52389F01	MSM4081RS
or	51T52157F01	MC14081BCP
IC28	51T52388F01	MSM4066RS
or	51T40941U01	MC14066BCP
IC29	51T52388F01	MSM4066RS
or	51T40941U01	MC14066BCP
IC30	51T52393F01	M51901
IC31	51T51478F01	P.S. E.Q 5840
IC32	51T52387F01	MSM4028RS
or	51T51782F01	MC14028BCP
IC33	51T52392F01	M54563P
IC34	51S43471U02	μPC4558C
IC35	51S43471U02	μPC4558C
FET & Transistors		
FET1	48S45314G01	2SK19-Y
FET2	48T41883F01	2SK30A-R
Q3	48T51878F01	2SC2878-A, B
Q4	48S40591U01	2SB641-Q
or	48S40591U04	2SB641-R
Q5	48S44578J01	2SC945L-P
or	48S43525F02	2SC1815-Y
Q6	48T52508F01	2SC1545-A, B
Q7	48T52508F01	2SC1545-A, B
Q8	48T52508F01	2SC1545-A, B
Q9	48T52508F01	2SC1545-A, B
Q10	48T52508F01	2SC1545-A, B
Q11	48T52508F01	2SC1545-A, B
Q12	48T52508F01	2SC1545-A, B
Q13	48T52508F01	2SC1545-A, B
Q14	48T52508F01	2SC1545-A, B
Q15	48T51878F01	2SC2878-A, B

Symbol No.	Part No.	Description
Q16	48T51878F01	2SC2878-A, B
Q17	48T40627U01	2SD636-Q
Q18	48T40627U01	2SD636-Q
Q19	48T40627U01	2SD636-Q
Q20	48T40627U01	2SD636-Q
Q21	48S43525F02	2SC1815-Y
Q22	48S44578J01	2SC945L-P
or	48S43525F02	2SC1815-Y
Q25	48T51878F01	2SC2878-A, B
Q32	48S44578J01	2SC945L-P
or	48S43525F02	2SC1815-Y
Diodes		
D5	48T44813F01	MA165TA
D6	48T44813F01	MA165TA
D7	48S134816	1S1555
D8	48T44813F01	MA165TA
D9	48T44813F01	MA165TA
D10	48S134816	1S1555
D11	48T44813F01	MA165TA
D13	48T44813F01	MA165TA
D15	48T44813F01	MA165TA
D17	48T44813F01	MA165TA
D19	48T44813F01	MA165TA
D21	48T44813F01	MA165TA
D23	48T44813F01	MA165TA
D26	48T44813F01	MA165TA
D27	48T44813F01	MA165TA
D48	48T44813F01	MA165TA
D49	48T44813F01	MA165TA
D50	48T44813F01	MA165TA
D51	48S134816	1S1555
D52	48T44813F01	MA165TA
D53	48T44813F01	MA165TA
D54	48B41768G01	1N60
D55	48B41768G01	1N60
D57	48T44813F01	MA165TA
D58	48T44813F01	MA165TA

Symbol No.	Part No.	Description
ZD12	48T40150U19	Zener, HZ5A-1
ZD14	48T40150U19	Zener, HZ5A-1
ZD16	48T40150U19	Zener, HZ5A-1
ZD18	48T40150U19	Zener, HZ5A-1
ZD20	48T40150U19	Zener, HZ5A-1
ZD22	48T40150U19	Zener, HZ5A-1
ZD24	48T40150U19	Zener, HZ5A-1
Capacitors		
C100	23S41198U09	Electrolytic 4.7 μF/50V
C101	21C45322G22	Ceramic 100 pF
C102	23T42478F20	Electrolytic (L, N) 0.22 μF/50V
C103	8T52448F41	Polypropylene 0.015 μF
C104	8T52448F41	Polypropylene 0.015 μF
C105	23S40657F32	Electrolytic 10 μF/50V
C106	23S40657F09	Electrolytic 220 μF/10V
C107	23S40657F32	Electrolytic 10 μF/50V
C111	23S40657F28	Electrolytic 1 μF/50V
C112	8T52448F13	Polypropylene 0.001 μF
C113	8T52448F13	Polypropylene 0.001 μF
C114	8T42629F25	Mylar 0.047 μF
C115	8T42629F25	Mylar 0.047 μF
C116	23S41198U12	Electrolytic 10 μF/50V
C117	23S40657F32	Electrolytic 10 μF/50V
C118	8T52448F45	Polypropylene 0.022 μF
C119	8T52448F45	Polypropylene 0.022 μF
C120	23S41198U12	Electrolytic 10 μF/50V
C121	23S40657F32	Electrolytic 10 μF/50V
C122	8T52448F37	Polypropylene 0.01 μF
C123	8T52448F37	Polypropylene 0.01 μF
C124	23S41198U12	Electrolytic 10 μF/50V
C125	23S40657F32	Electrolytic 10 μF/50V
C126	8T52448F27	Polypropylene 0.0039 μF
C127	8T52448F27	Polypropylene 0.0039 μF
C128	23S41198U12	Electrolytic 10 μF/50V
C129	23S40657F32	Electrolytic 10 μF/50V
C130	8T52448F19	Polypropylene 0.0018 μF
C131	8T52448F19	Polypropylene 0.0018 μF
C132	23S41198U12	Electrolytic 10 μF/50V

Symbol No.	Part No.	Description
C133	23S40657F32	Electrolytic 10 μF/50V
C134	8T52448F09	Polypropylene 680 pF
C135	8T52448F09	Polypropylene 680 pF
C136	23S41198U12	Electrolytic 10 μF/50V
C137	23S40657F32	Electrolytic 10 μF/50V
C138	8T52448F01	Polypropylene 330 pF
C139	8T52448F01	Polypropylene 330 pF
C140	23S41198U12	Electrolytic 10 μF/50V
C141	23S40657F32	Electrolytic 10 μF/50V
C142	23S40657F29	Electrolytic 2.2 μF/50V
C143	21C45322G15	Ceramic 27 pF/50V
C144	21C45322G15	Ceramic 27 pF/50V
C147	8S40805F05	Ceramic 470 pF
C148	8S40805F06	Ceramic 680 pF
C149	8S40805F05	Ceramic 470 pF
C150	8S40805F05	Ceramic 470 pF
C151	8S40805F01	Ceramic 100 pF
C152	8S40805F01	Ceramic 100 pF
C153	8S40805F01	Ceramic 100 pF
C154	8S40805F01	Ceramic 100 pF
C155	8S40805F01	Ceramic 100 pF
C156	23S40657F32	Electrolytic 10 μF/50V
C157	23S41198U03	Electrolytic 1 μF/50V
C158	23S41198U03	Electrolytic 1 μF/50V
C159	23S41198U09	Electrolytic 4.7 μF/50V
C160	23S41198U09	Electrolytic 4.7 μF/50V
C161	23S41198U12	Electrolytic 10 μF/50V
C162	23S41198U12	Electrolytic 10 μF/50V
C165	23S41198U33	Electrolytic 100 μF/10V
C166	23S41198U33	Electrolytic 100 μF/10V
C176	23S40657F32	Electrolytic 10 μF/50V
C177	23S40657F09	Electrolytic 220 μF/10V
C178	8T52448F49	Polypropylene 0.033 μF
C179	23C42909J03	Electrolytic 0.1 μF/50V
C180	23C42909J01	Electrolytic 0.22 μF/50V
C181	8T42629F27	Mylar 0.068 μF
C182	23S41198U03	Electrolytic 1 μF/50V
C183	23S40657F32	Electrolytic 10 μF/50V
C184	23S40657F32	Electrolytic 10 μF/50V
C185	23S41198U12	Electrolytic 10 μF/50V
C186	23T42478F20	Electrolytic 0.22 μF/50V
C187	23T51232F02	Electrolytic 1000 μF/16V
C189	23S41198U40	Electrolytic 220 μF/10V
C190	23S41198U40	Electrolytic 220 μF/10V
C191	23S41198U33	Electrolytic 100 μF/10V

Symbol No.	Part No.	Description
C195	23S41198U12	Electrolytic 10 uF/50V
C196	23S41198U33	Electrolytic 100 μF/10V
Resistors (All resistors are carbon film, ±5%, 1/8W unless otherwise noted.)		
R100	6T43159F73	2.2K ohm
R102	6T43159F89	10K ohm
R103	6T43159F89	10K ohm
R104	6S41042U98	24K ohm
R105	6T43160F30	470K ohm
R106	6T43160F06	47K ohm
R107	6S41043U14	100K ohm
R108	6T43159F89	10K ohm
R109	6T43160F14	100K ohm
R111	6T43159F77	3.3K ohm
R112	6T43159F77	3.3K ohm
R113	6T43160F14	100K ohm
R114	6T43159F77	3.3K ohm
R115	6T43159F97	22K ohm
R116	6T43160F06	47K ohm
R117	6T43159F97	22K ohm
R118	6T43160F22	220K ohm
R119	6T43159F97	22K ohm
R120	6T43160F22	220K ohm
R121	6T43159F97	22K ohm
R122	6T43160F14	100K ohm
R123	6T43159F89	10K ohm
R124	6T43160F14	100K ohm
R125	6T43160F14	100K ohm
R126	6T43159F65	1K ohm
R127	6T43159F65	1K ohm
R128	6T43160F14	100K ohm
R129	6S41042U83	5.6K ohm
R130	6T43160F14	100K ohm
R131	6T43160F14	100K ohm
R132	6T43159F83	5.6K ohm
R133	6T43159F83	5.6K ohm
R134	6T43159F73	2.2K ohm
R135	6T43160F14	100K ohm
R136	6T43160F14	100K ohm
R137	6T43160F02	33K ohm
R138	6T43160F14	100K ohm
R139	6T43160F02	33K ohm
R140	6T43160F14	100K ohm

Symbol No.	Part No.	Description
R141	6T43160F02	33K ohm
R142	6T43160F14	100K ohm
R143	6T43160F02	33K ohm
R144	6T43160F14	100K ohm
R145	6T43160F02	33K ohm
R146	6T43160F14	100K ohm
R147	6T43160F02	33K ohm
R148	6T43160F14	100K ohm
R149	6T43160F02	33K ohm
R150	6T43160F14	100K ohm
R151	6T43160F02	33K ohm
R152	6T43160F14	100K ohm
R153	6T43160F02	33K ohm
R154	6T43160F14	100K ohm
R155	6T43160F02	33K ohm
R156	6T43160F14	100K ohm
R157	6T43160F02	33K ohm
R158	6T43160F14	100K ohm
R159	6T43160F02	33K ohm
R160	6T43160F14	100K ohm
R161	6T43160F02	33K ohm
R162	6T43160F14	100K ohm
R163	6T43160F02	33K ohm
R164	6T43160F14	100K ohm
R165	6T43160F14	100K ohm
R166	6T43160F14	100K ohm
R167	6T43160F14	100K ohm
R168	6T43160F14	100K ohm
R169	6T43160F14	100K ohm
R170	6T43160F14	100K ohm
R171	6T43160F14	100K ohm
R172	6T43160F10	68K ohm
R174	6T43160F14	100K ohm
R175	6T43160F14	100K ohm
R176	6T43160F14	100K ohm
R177	6T43160F14	100K ohm
R178	6T43160F14	100K ohm
R179	6T43160F14	100K ohm
R180	6T43160F14	100K ohm
R181	6T43160F14	100K ohm
R182	6T43159F97	22K ohm
R183	6T43160F12	82K ohm
R184	6T43159F89	10K ohm
R185	6T43159F89	10K ohm
R186	6T43159F89	10K ohm

Symbol No.	Part No.	Description
R187	6T43159F97	22K ohm
R188	6T43159F97	22K ohm
R189	6T43159F69	1.5K ohm
R190	6T43159F89	10K ohm
R191	6T43159F89	10K ohm
R192	6T43159F89	10K ohm
R193	6T43159F89	10K ohm
R194	6T43159F89	10K ohm
R195	6T43159F89	10K ohm
R196	6T43159F89	10K ohm
R197	6T43159F89	10K ohm
R198	6T43159F89	10K ohm
R199	6C44652G43	Metal 82 ohm 1W
R200	6C44652G43	Metal 82 ohm 1W
R201	6C44652G43	Metal 82 ohm 1W
R202	6C44652G43	Metal 82 ohm 1W
R203	6C44652G43	Metal 82 ohm 1W
R204	6C44652G43	Metal 82 ohm 1W
R205	6C44652G43	Metal 82 ohm 1W
R206	6C44652G07	Metal 68 ohm 1W
R209	6T43160F14	100K ohm
R210	6T43160F14	100K ohm
R211	6T43159F98	24K ohm
R212	6T43159F65	1K ohm
R213	6T43159F89	10K ohm
R214	6T43159F89	10K ohm
R217	6T43160F14	100K ohm
R218	6T43160F14	100K ohm
R221	6T43159F96	20K ohm
R222	6T43159F96	20K ohm
R223	6T43159F89	10K ohm
R224	6T43159F89	10K ohm
R225	6T43159F96	20K ohm
R226	6T43159F96	20K ohm
R227	6T43159F89	10K ohm
R228	6T43159F89	10K ohm
R229	6T43159F89	10K ohm
R230	6T43159F89	10K ohm
R231	6T43159F97	22K ohm
R232	6S41042U73	2.2K ohm
R233	6S41042U65	1K ohm
R243	6T43159F89	10K ohm
R244	6T43159F89	10K ohm
R245	6T43160F14	100K ohm
R247	6T43160F22	220K ohm

Symbol No.	Part No.	Description
R248	6T43159F41	100 ohm
R249	6T43159F89	10K ohm
R250	6T43160F06	47K ohm
R251	6T43159F65	1K ohm
R252	6T43159F89	10K ohm
R253	6T43159F97	22K ohm
R254	6T43159F97	22K ohm
R256	6T43159F53	330 ohm
R257	6T43160F22	220K ohm
R258	6T43160F14	100K ohm
R259	6T43160F02	33K ohm
R260	6T43159F85	6.8K ohm
R261	6T43159F52	300 ohm
R262	6T43159F65	1K ohm
R263	6T43159F76	3K ohm
R264	6T43160F26	330K ohm
R265	6T43159F77	3.3K ohm
R266	6T43159F89	10K ohm
R267	6T43159F97	22K ohm
R268	6T43160F14	100K ohm
R269	6T43159F89	10K ohm
R270	6T43159F89	10K ohm
R271	6T43160F14	100K ohm
R272-1	6S41043U30	470K ohm
R272-2	6S41043U30	470K ohm
R273	6S41042U65	1K ohm
R276	6T43160F38	1M ohm
R277	6T43160F38	1M ohm
R280	6T43159F89	10K ohm
R281	6T43159F81	4.7K ohm
R282	6T43160F14	100K ohm
R283	6T43160F14	100K ohm
R284	6T43160F14	100K ohm
R285	6T43160F14	100K ohm
R286	6T43160F14	100K ohm
R287	6T43160F14	100K ohm
R288	6T43160F14	100K ohm
R289	6T43160F30	470K ohm
R290	6T43160F14	100K ohm
R291	6T43160F10	68K ohm
R292	6T43160F10	68K ohm
R293	6S41042U89	10K ohm

Symbol No.	Part No.	Description
R294	6T43159F73	2.2K ohm
R295	6T43159F89	10K ohm
R296	6T43159F89	10K ohm
R297	6T43160F21	200K ohm
R298	6T43160F21	200K ohm
Crystal/Coil/Variable Resistors		
CR1	48T52518F01	Crystal, 4.2M
L10	24S41448F73	Coil, 1000 μH
VR1	18C41732G15	Resistor, Variable 33K ohm
VR2	18C41732G09	Resistor, Variable 47K ohm
VR4	18T42748F15	Resistor, Variable 22K ohm
VR5	18B42472P11	Resistor, Variable 20K ohm
Power P.C. Board		
Transistors		
Q26	48T44044U03	2SC1383-R
Q27	48T44044U03	2SC1383-R
Q28	48S43239G02	2SC509-Y
or	48S40832F03	2SC1318NC-R
or	48S40832F04	2SC1318NC-S
Q29	48S43239G02	2SC509-Y
or	48S40832F03	2SC1318NC-R
or	48S40832F04	2SC1318NC-S
Q30	48S43239G02	2SC509-Y
or	48S40832F03	2SC1318NC-R
or	48S40832F04	2SC1318NC-S
Q31	48S43525F02	2SC1815-Y
Diodes		
D42	48T44813F01	MA165TA
D43	48T44813F01	MA165TA
D44	48T44813F01	MA165TA
D45	48T44992F01	DS135D
D46	48T44992F01	DS135D
D47	48T44992F01	DS135D
ZD36	48T40059U05	Zener, HZ6B-2L
ZD37	48T40059U13	Zener, HZ7B-1L
ZD38	48T40059U01	Zener, HZ6A-1L
ZD39	48T40059U08	Zener, HZ6C-2L
ZD40	48T40059U33	Zener, HZ11B-3L

Symbol No.	Part No.	Description
Filter & Coils		
L5	24S41448F73	Coil, 1000 μH
L6	24S41448F73	Coil, 1000 μH
L7	24S41448F73	Coil, 1000 μH
L8	25T43811U01	Filter, Choke
L9	24S41448F91	Coil, 1000 μH
Capacitors		
C300	23S41198U33	Electrolytic 100 μF/10V
C301	23S41198U33	Electrolytic 100 μF/10V
C302	23S41198U15	Electrolytic 22 μF/25V
C303	23S41198U15	Electrolytic 22 μF/25V
C304	23S41198U33	Electrolytic 100 μF/10V
C305	23S41198U15	Electrolytic 22 μF/25V
C306	23S41198U15	Electrolytic 22 μF/25V
C307	23S41198U15	Electrolytic 22 μF/25V
C308	23S41198U15	Electrolytic 22 μF/25V
C309	23B44780P16	Electrolytic 100 μF/16V
C310	23B44780P16	Electrolytic 100 μF/16V
C311	23T51232F02	Electrolytic 1000 μF/16V
C312	23T43247F13	Electrolytic 47 μF/10V
C313	23S41198U40	Electrolytic 220 μF/10V
C314	23S40657F07	Electrolytic 47 μF/10V
C315	23S40657F07	Electrolytic 47 μF/10V
C316	8T44979P14	Ceramic 0.1 μF
C317	8T44979P14	Ceramic 0.1 μF
C318	8T44979P14	Ceramic 0.1 μF
C319	23S41198U33	Electrolytic 100 μF/10V
Resistors	(All resistors are carbon film, ±5%, 1/4W unless otherwise noted.)	
R300	6D44744G14	33 ohm 1/2W
R301	6S44593P65	1K ohm
R302	6D44744G14	33 ohm 1/2W
R303	6S44593P65	1K ohm
R304	6S44593P89	10K ohm
R305	6D44744G20	100 ohm 1/2W
R306	6S44593P65	1K ohm
R307	6D44744G20	100 ohm 1/2W
R308	6S44593P65	1K ohm
R309	6S44593P81	4.7K ohm
R310	6S44593P73	2.2K ohm

Symbol No.	Part No.	Description
Relay & Varistor		
RL1	80T40631F01	Relay, FBR-311
B10	48T52509F01	Varistor, NVO22D10
Key Board P.C. Board		
Lamps/LED's		
LAMP1	65T52397F02	Lamp, Pilot
LAMP2	65T52397F01	Lamp, Pilot
LED1	48T41563F01	LED PG5531KX 5 x 2 (Grn)
LED2	48T41563F01	LED PG5531KX 5 x 2 (Grn)
LED3	48T41562F01	LED PR5531K 5 x 2 (Red)
LED4	48T41562F01	LED PR5531K 5 x 2 (Red)
LED5	48T42449F03	LED (Org)
LED6	48T42449F03	LED (Org)
LED7	48T42449F03	LED (Org)
LED8	48T42449F03	LED (Org)
LED9	48T42449F03	LED (Org)
LED10	48T42449F03	LED (Org)
LED11	48T42449F03	LED (Org)
LED12	48T42449F03	LED (Org)
Diodes & Resistor		
D28	48T44813F01	Diode, MA165TA
D29	48T44813F01	Diode, MA165TA
D30	48T44813F01	Diode, MA165TA
D31	48T44813F01	Diode, MA165TA
D32	48T44813F01	Diode , MA165TA
D33	48T44813F01	Diode, MA165TA
D34	48T44813F01	Diode, MA165TA
D35	48T44813F01	Diode, MA165TA
D56	48T44813F01	Diode, MA165TA
R400	6T43159F53	Res., Carbon Film, 330 ohm 1/8W

Symbol No.	Part No.	Description
Switches		
SW1	40T51411F02	Tact Switch
SW2	40T51411F02	Tact Switch
SW3	40T51411F02	Tact Switch
SW4	40T51411F01	Tact Switch
SW5	40T51411F02	Tact Switch
SW6	40T51411F02	Tact Switch
SW7	40T51411F02	Tact Switch
SW8	40T51411F02	Tact Switch
SW9	40T51411F02	Tact Switch
SW10	40T51411F02	Tact Switch
SW11	40T51411F02	Tact Switch
SW12	40T51411F02	Tact Switch
SW13	40T51411F02	Tact Switch
SW14	40T51411F02	Tact Switch
SW15	40T51411F02	Tact Switch
SW16	40T51411F02	Tact Switch
SW17	40T51411F02	Tact Switch
SW18	40T51411F02	Tact Switch
SW19	40T51411F02	Tact Switch
SW20	40T51411F02	Tact Switch
SW21	40T51411F02	Tact Switch
SW22	40T51411F02	Tact Switch
Miscellaneous Parts		
C399-1, C399-2, C399-3	8T42153U04	Cap., Feed Through
C401	23S41198U15	Electrolytic 22 μF/25V
C402	23S41198U15	Electrolytic 22 μF/25V
E1	1T52526F01	Connector, Input DIN
E2	1T52527F01	Connector, Output DIN
LED13	48T52412F01	Unit, LED
MC1	50T51155F01	Microphone, EM-80
R401	6T43159F57	Res., Carbon, 470 ohm 1/8W
R402	6T43159F57	Res., Carbon, 470 ohm 1/8W
R403	6T43159F57	Res., Carbon, 470 ohm 1/8W
R404	6T43159F57	Res., Carbon, 470 ohm 1/8W
R405	6T43159F65	Res., Carbon, 1K ohm 1/8W
VR3	18T52396F01	Volume, Control (Level, Fader)

Symbol No.	Part No.	Description

Cabinet Assembly Parts List

Symbol No.	Index.	Part No.	Description
1	4-A	13C52414F01	Assembly, Nose Piece
2		3S44205G45	Screw, Machine (Flat) (M2.6x5)
3	5-A	36B51976F01	Knob, Control (Fader)
4	5-A	36B51977F01	Knob, Control (Level)
5	2-C	15C51981F01	Cover, Top
6	2-C	※	Fiber, Insulator
7	3-C	※	Washer (M9.2)
8	3-C	※	Chassis, Front
9	3-C	2S40000G20	Mut (M9)
10	3-C	4S40070G28	Washer (M9.1)
11		3S44205G07	Screw, Tap Tite (M2.6 x 5)
13	5-C	36B51986F01	Button, Preset (1)
14	5-C	36B51986F03	Button, Preset (3)
15	4-C	15A51197F01	Case, Microphone
16	4-C	36B51985F01	Button, Memory
17		41A47848F03	Spring
18	4-C	36B51983F01	Button, Push (AUTO EQ. AVC, EQ/LEVEL)
19		※	Support, Switch
20		36B51984F01	Button, Push (UP, DOWN)
21	5-C	36B51986F02	Button, Preset (2)
22	5-C	36B51986F04	Button, Preset (4)
23	1-E	1V53700F97	Assembly, Control P.C. Board
24	3-E	※	P.C. Board, Volume
25	3-E	15B52315F01	Case, LED
26	4-E	1V53700F98	Assembly, Key Board P.C. Board
27	5-E	※	Cover, Switch
28	5-E	3S40012G58	Screw, Tapping (M2 x 5)
29	5-E	※	Cover, Bottom
30	2-F	※	Bracket, P.C.B. Mounting
31	4-F	※	Bracket, IC Mounting (A)
32		3S44205G12	Screw, Tap Tite (M3 x 4)
33	2-G	※	Fiber, Insulator
34	2-G	1V53700F99	Assembly, Power P.C. Board
35	2-G	※	Tub, Vinyle (40 mm)
36	3-G	※	Chassis, Main
37	3-B	※	Bracket, Shield
38	3-G	3C40014G24	Screw, Tap Tite (M3 x 10)
39	4-G	※	Bracket, IC Mounting (B)
40	4-G	1V53700F96	Assembly, Graphic Equalizer P.C. Board
41	5-G	※	Cover, Insulator
42	1-H	15T44235F01	Cover, Connector
43	3-H	3C42723U01	Screw, Cup (M3 x 6)
44	3-H	42B41424G03	Clamp, Cord
45	3-H	42B41424G05	Clamp, Cord
46	3-D	43A41728U11	Bush, Lamp

※ Parts without part number are not supplied.

Exploded View (Cabinet)

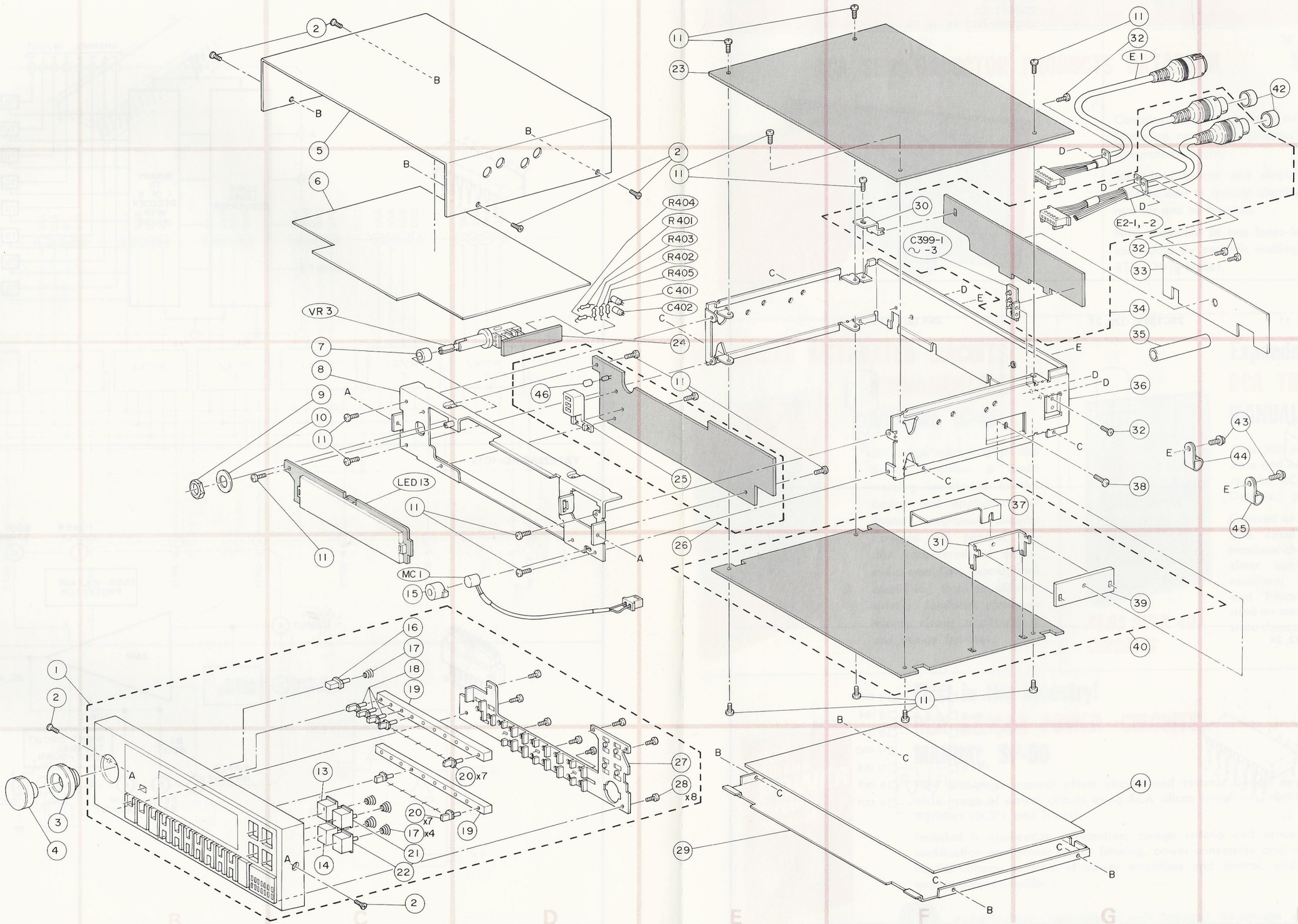

Semi-Conductor Lead Identifications

2SC945L: Q1, 5, 22, 32
2SC2878: Q3, 15, 16, 25
2SC1815: Q5, 21, 22, 31, 32
2SC509: Q28, 29, 30
2SC1318NC: Q28, 29, 30

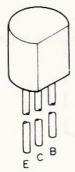

2SB641: Q4
2SD636: Q17, 18, 19, 20

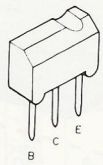

2SC1545: Q6, 7, 8, 9, 10, 11, 12, 13, 14

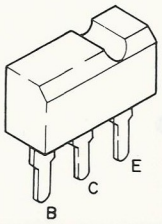

2SC1383: Q26, 27

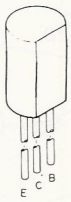

2SK19: FET1

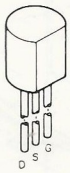

2SK30: FET2

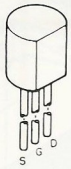

μPC474IC: IC1, 2, 3, 4, 23, 24
μPC324C: IC21

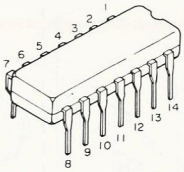

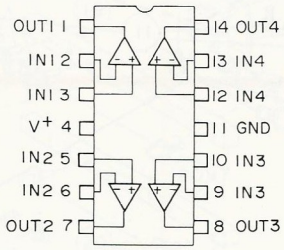

MSM4051RS: IC5, 6, 7, 8, 9, 10, 11, 12, 13, 14, 15, 16, 17, 18

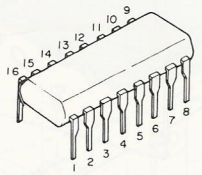

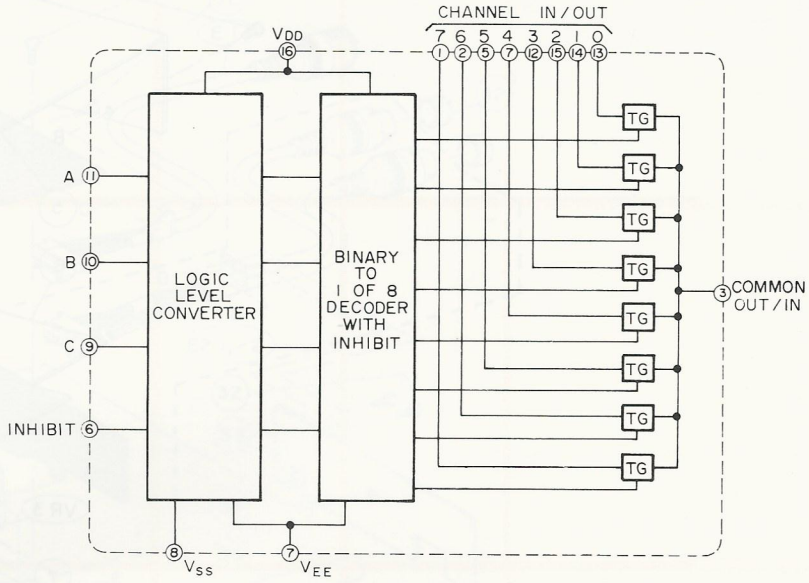

TA7222AP-AL: IC19

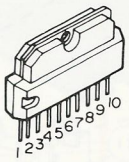

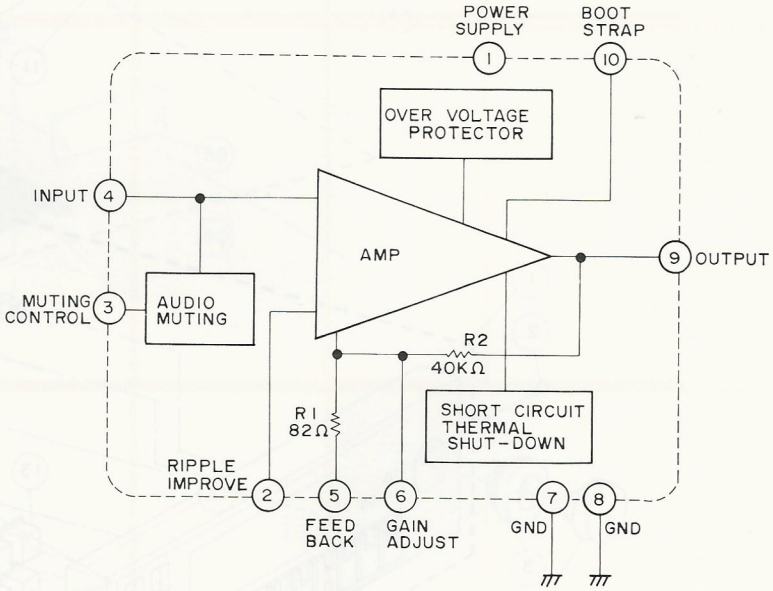

MSM60311RS: IC20

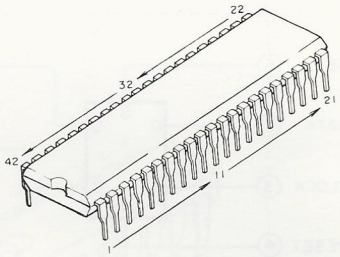

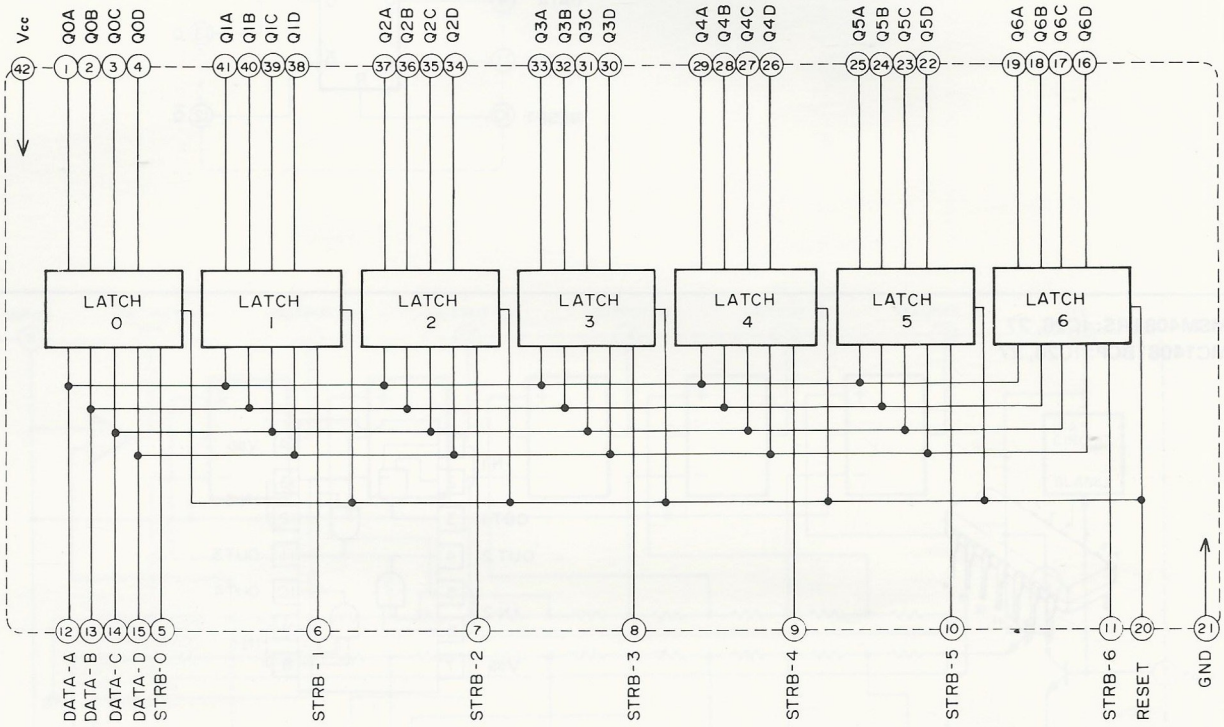

μPC358C: IC22
μPC4558C: IC34, 35

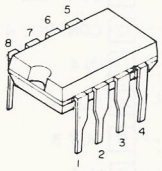

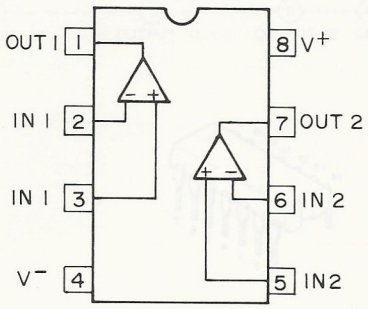

MSM4013RS: IC25
MC14013BCP: IC25

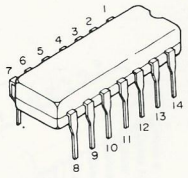

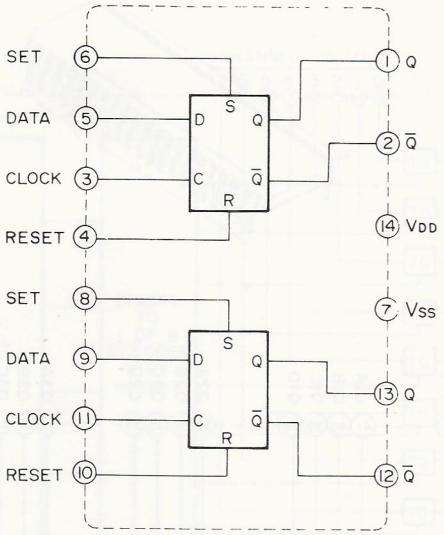

MSM4081RS: IC26, 27
MC14081BCP: IC26, 27

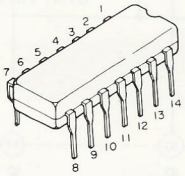

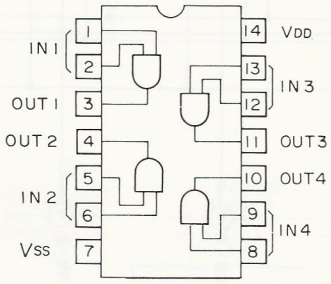

MSM4066RS: IC28, 29
MC14066BCP: IC28, 29

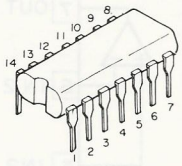

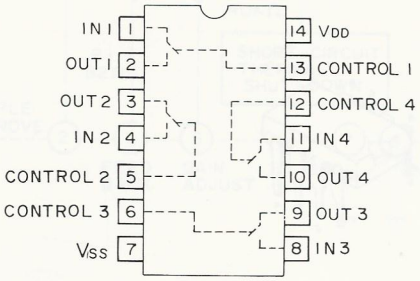

M51901: IC30

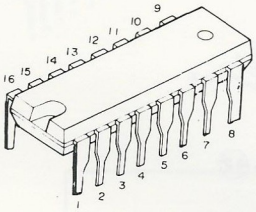
16
15
14
13
12
11
10
9
1
2
3
4
5
6
7
8

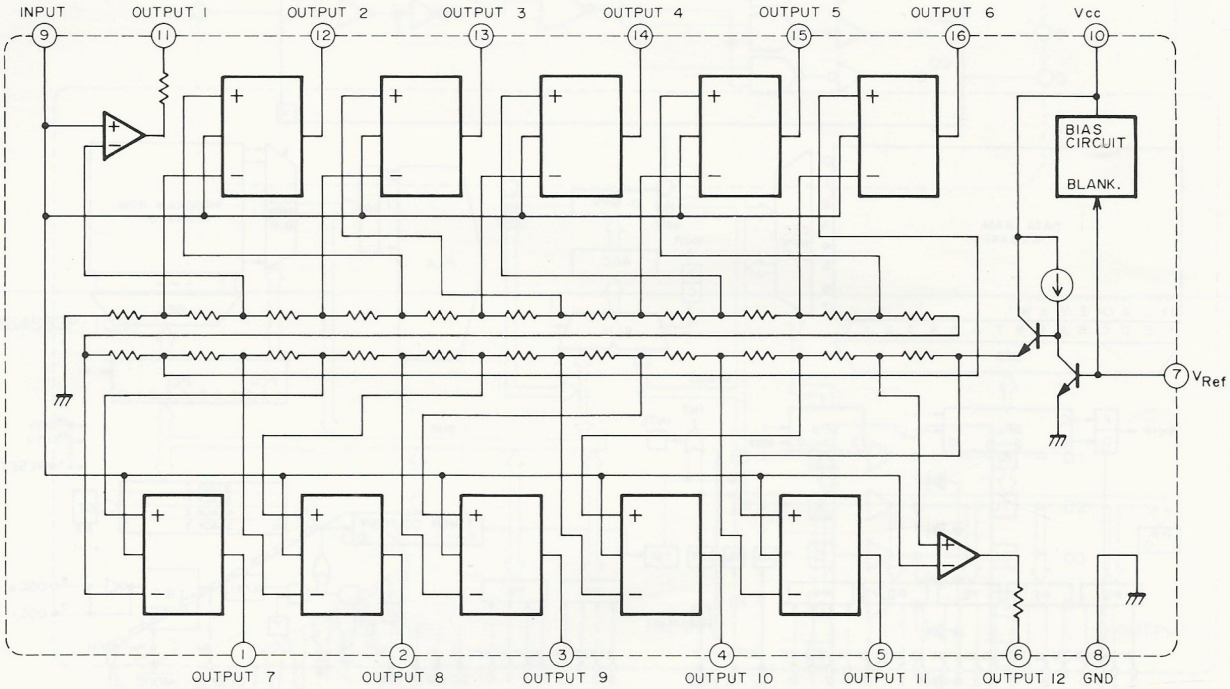
INPUT
9
OUTPUT 1
11
OUTPUT 2
12
OUTPUT 3
13
OUTPUT 4
14
OUTPUT 5
15
OUTPUT 6
16
Vcc
10
BIAS CIRCUIT
BLANK.
7
VRef
1
OUTPUT 7
2
OUTPUT 8
3
OUTPUT 9
4
OUTPUT 10
5
OUTPUT 11
6
OUTPUT 12
8
GND

P.S. EQ5840: IC31

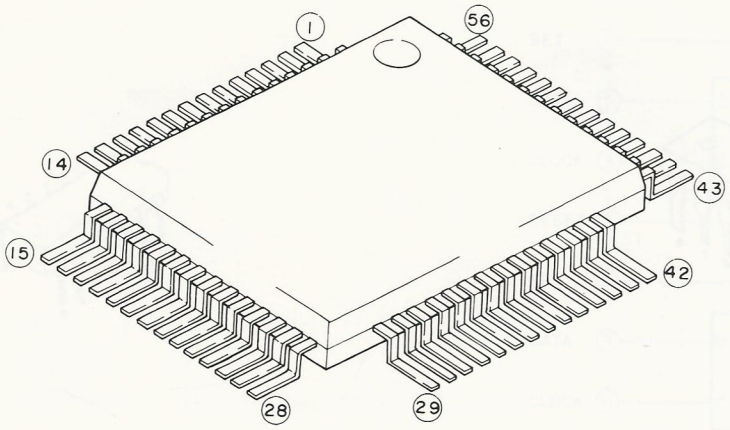

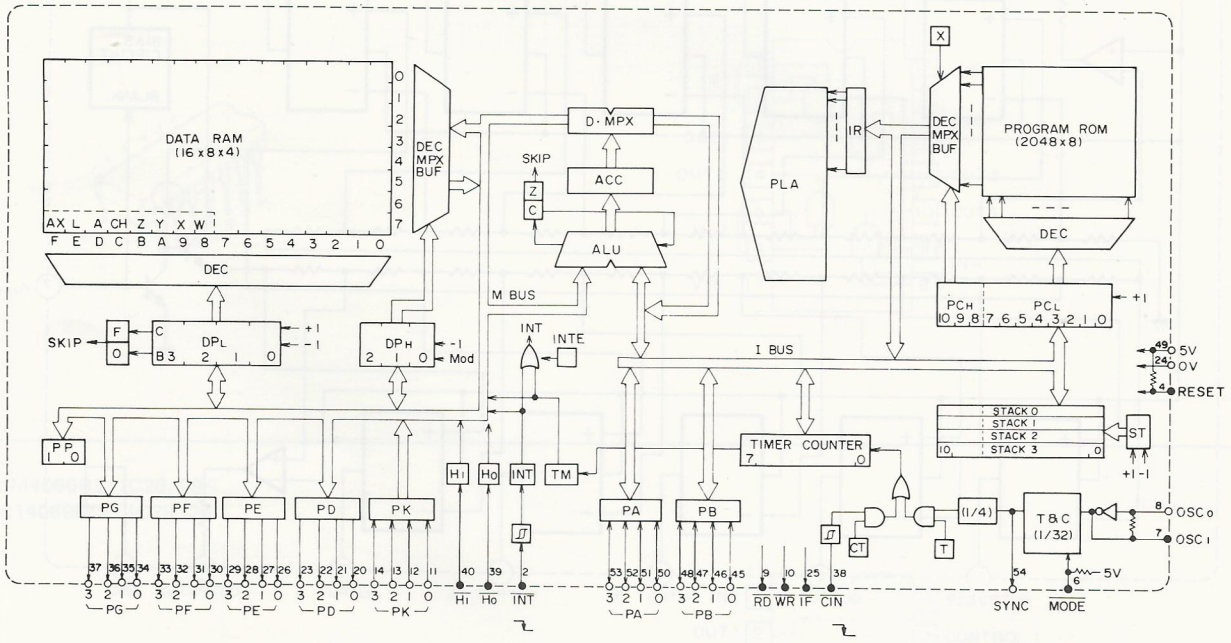

MSM4028RS: IC32
MC14028BCP: IC32

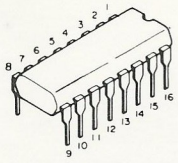

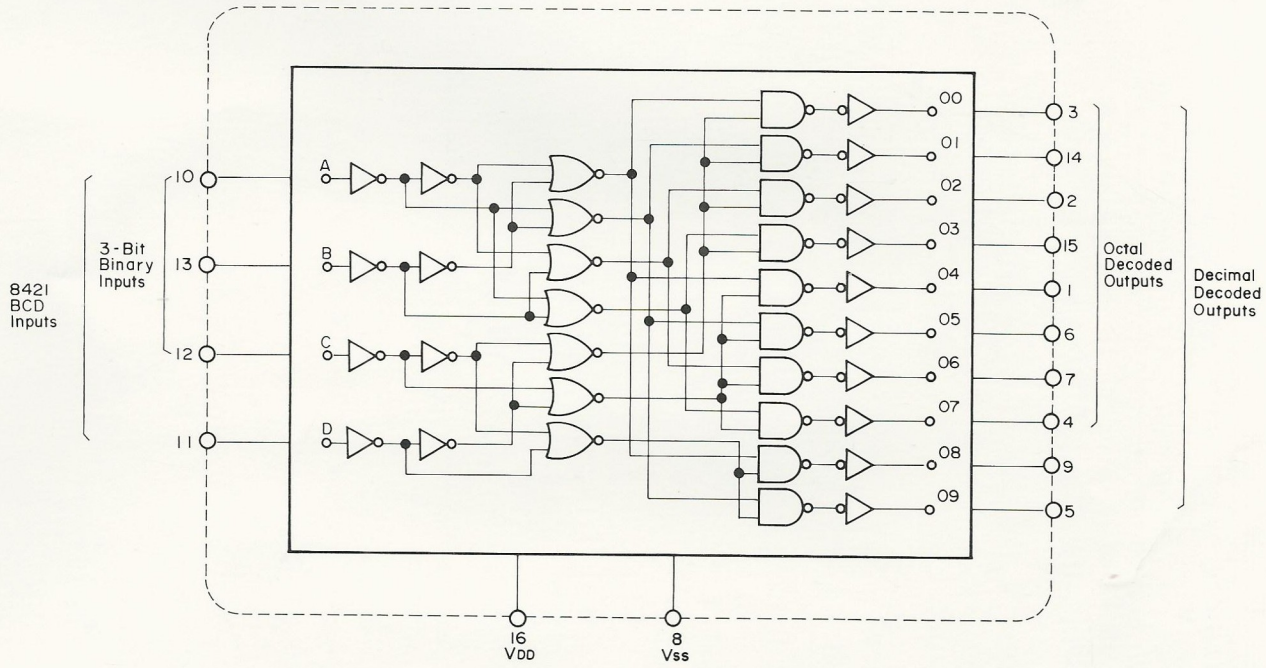
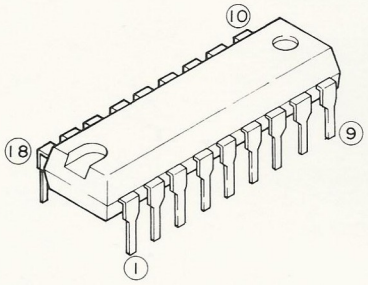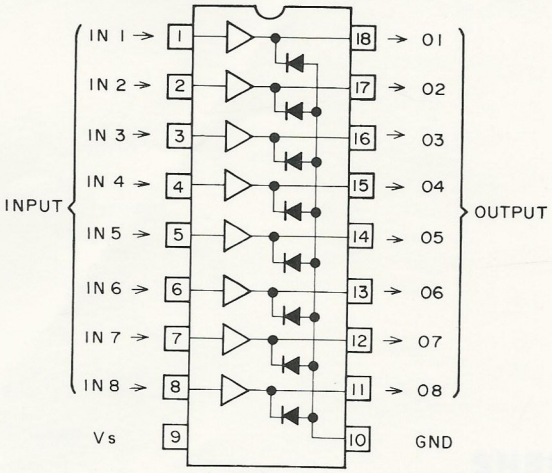
M54563P: IC33