ALPINE SERVICE MANUAL

PRE-AMP 5-BAND GRAPHIC EQUALIZER

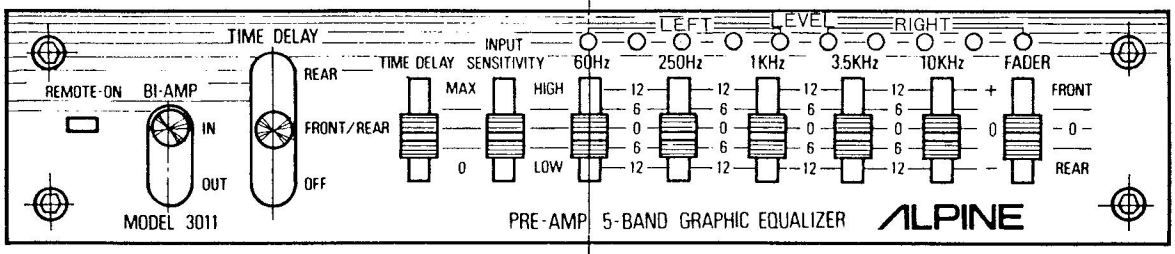

3011

Contents

Specifications 2
Parts Locations and Disassembly . . . . . 3 to 4
Troubleshooting 5
Alignment Procedure 5
Block Diagram 6
Schematic Diagram 7
Printed Circuit Board
- Graphic Equalizer P.C.Board 8
- Equalizer P.C.Board 9
- Switch P.C.Board. 9
- Volume P.C.Board 10

Wiring Diagram 11
Exploded View 12
Semi-Conductor Lead Identifications 13
Parts List . . . . . 14 to 17
Packing Method 18

Specifications

Input Level	Speaker Input: 1.2V (max.), DIN Output: 0.4 mV (max.)
Input Impedance	Speaker Input: 100 ohm, DIN Input: 10 kohm
Output Road Impedance	10 kohm (Front/Rear)
Channel Sepalation	15 dB (at 1 kHz)
Frequency Reaponce	100 Hz~10 kHz (at 600 mV output)
Output Noise	1.5 mV
Distortion	5.0 % (at 600 mV output)
Control Level	60 Hz ±12 dB, 250 Hz ±12 dB, 1 kHz ±12 dB, 3.5 kHz ±12 dB, 10 kHz ±12 dB
Bi-amp Frequency Resphonce	Front (500 Hz): -14 ±6 dB, Rear (2 kHz): -14 ±6 dB
Time Deray	Front (max.): 2 ±1 sec, Rear (max.): 2 ±1 sec
Current Drain	00
Power Supply	14 V (11~16 V)
Polarity	Negative Ground
Dimmentions	150(W) x 80(D) x 30(H) mm
Weight	530 g

Parts Locations and Disassembly Instruction

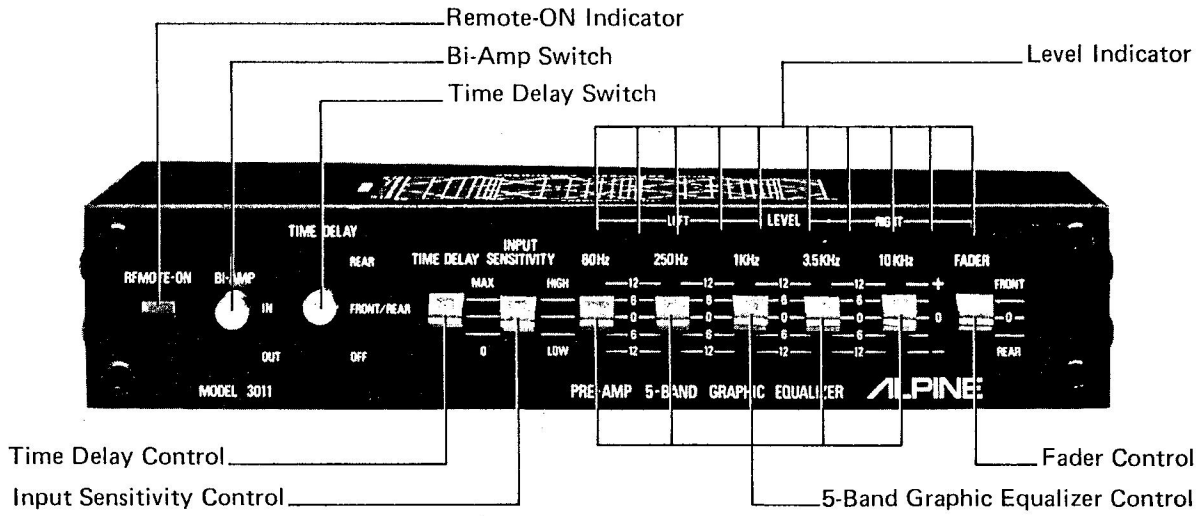

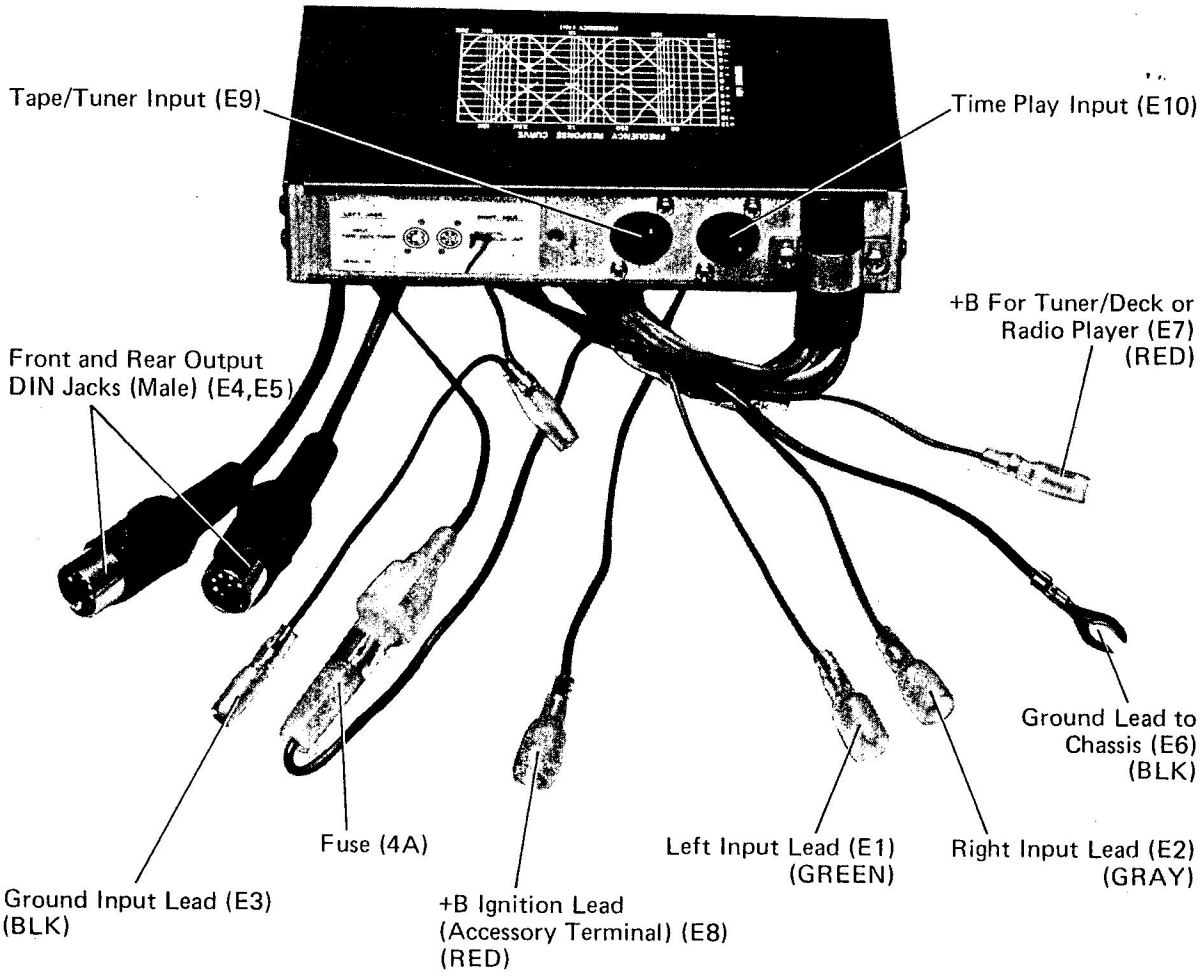

1.Removal of Top Cover.

(1) Remove 2 socket cap screws Ⓐ with the hex socket wrench.

(2) Remove 4 screws Ⓑ .

2.Removal Bottom Cover.

(1) Remove 2 socket cap screws Ⓒ .

(2) Remove 4 screws Ⓓ .

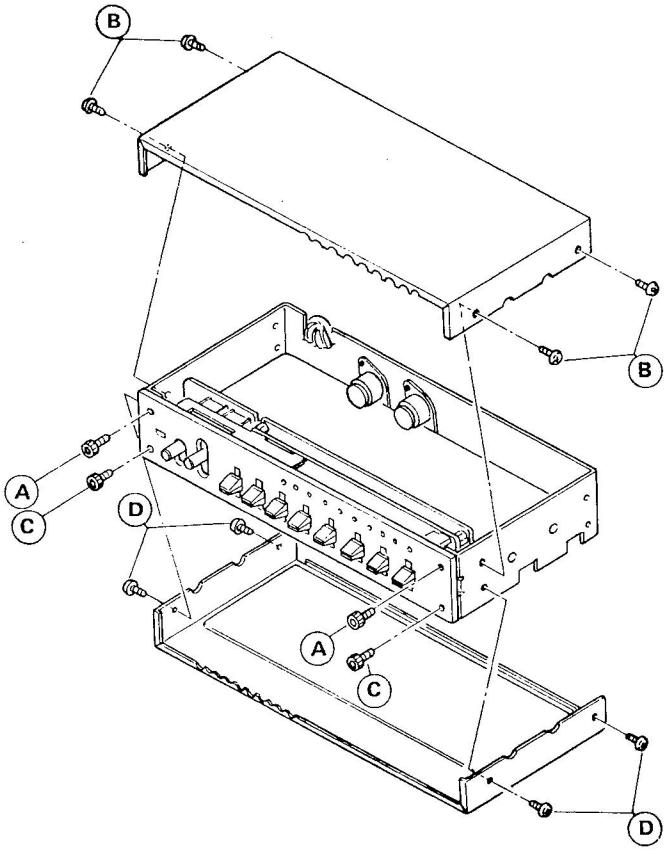

3. Removal of Graphic Equalizer P.C.Board.

(1) Remove 2screw Ⓔ securing the Graphic Equalizer P.C.Board Ⓕ

4. Removal of Volume P.C.Board.

(1) Remove 2 space screw Ⓖ and 1 screw Ⓗ securing the Volume P.C.Board Ⓘ

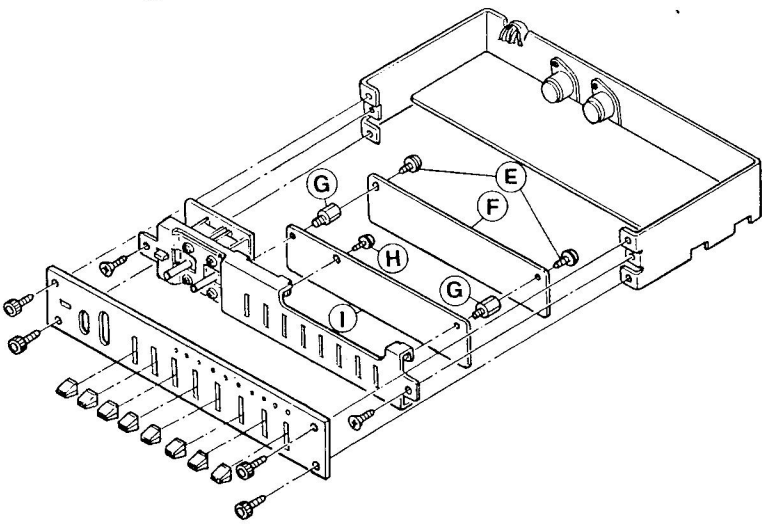

Trouble Shooting

Service procedures common to sophisticated electronic instrument is applicable to this unit. In general, a carfly approach would include following steps.

1. Operate unit with a test, or quality tape to appraise symptons.
2. Determine trouble is electrical or mechanical.
3. Determine malfunction is due to pre-amp P.C.B., Main amp P.C.B., or Control P.C.B.
4. Checkout voltage distribution at IC's and transistors.
5. Pinpoint defective section and replace defective component(s).

NO SOUND

1. Blown fuse.
2. Open circuit in power supply source.
3. Output cord disconnected.
4. Input line disconnected.
5. Input connector disconnected.
6. Defective tuner or deck.
7. Defective IC, transistor, doide, relay and circuitry component.

SOUND DISTORTED

1. Defective tuner or deck.
2. Improper input level or impedance not matched.
3. Defective IC.
4. Faulty power source.

SOUNDLEVEL LOW and/or DISTORTED IN ONE CHANNEL

1. Defective tuner or deck.
2. Disconnected input or output cord.
3. Too long output cord length in one channel.
4. Defective IC.

Alignment Procedure

Adjust the VR302 on the Equalizer P.C.B to its mechanical center position

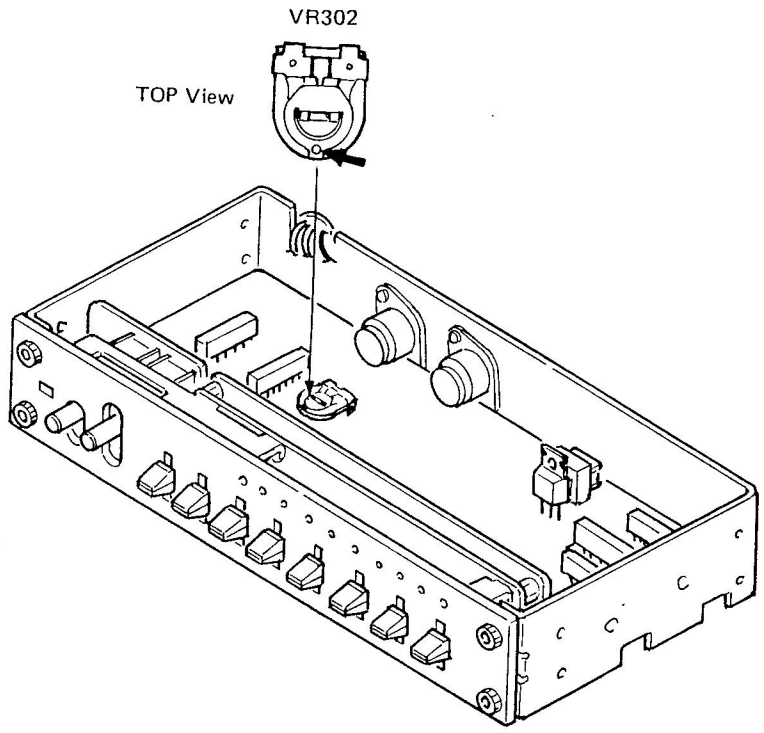

Block Diagram

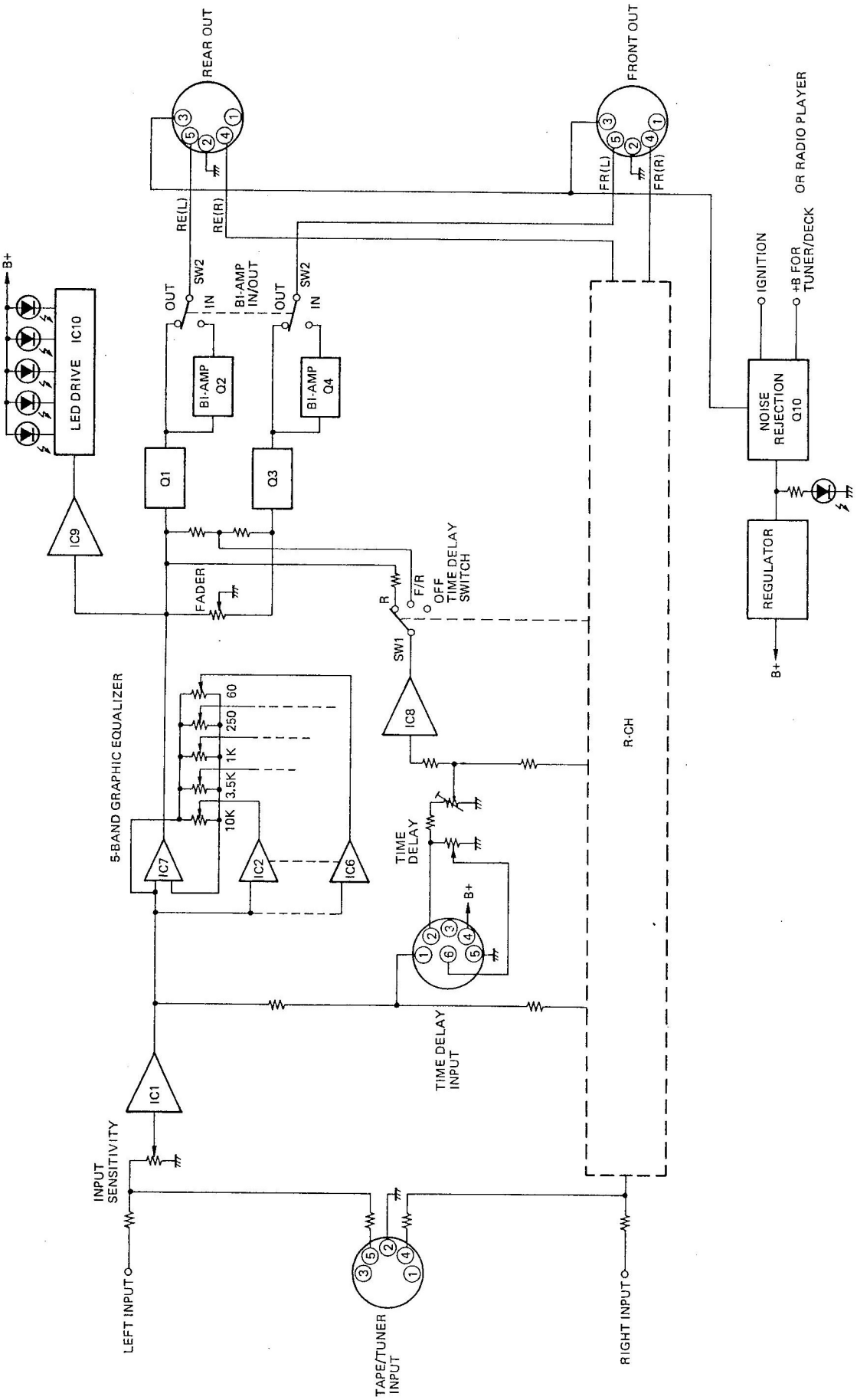

Schematic Diagram

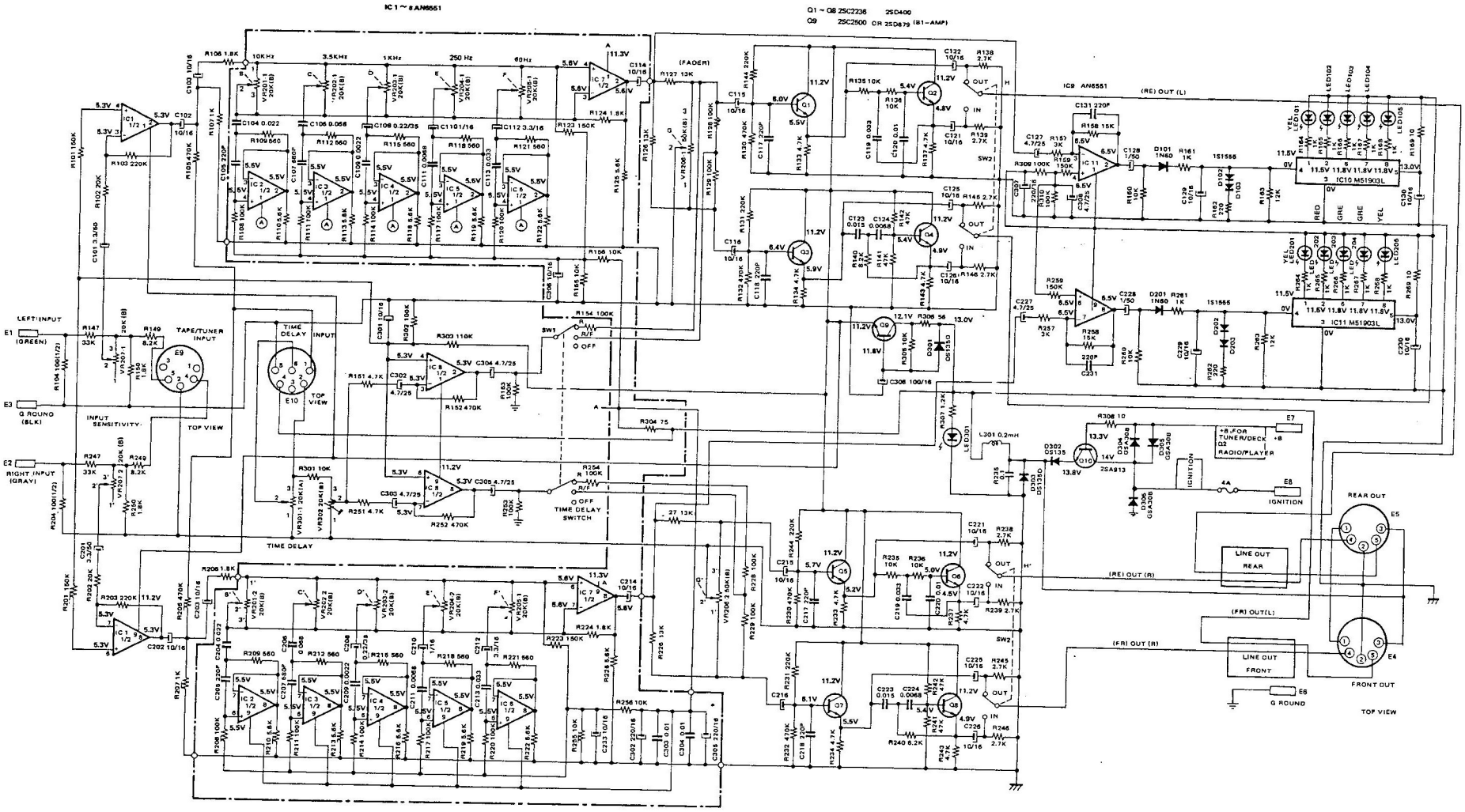

Printed Circuit Boards

Graphic Equalizer P.C.Board

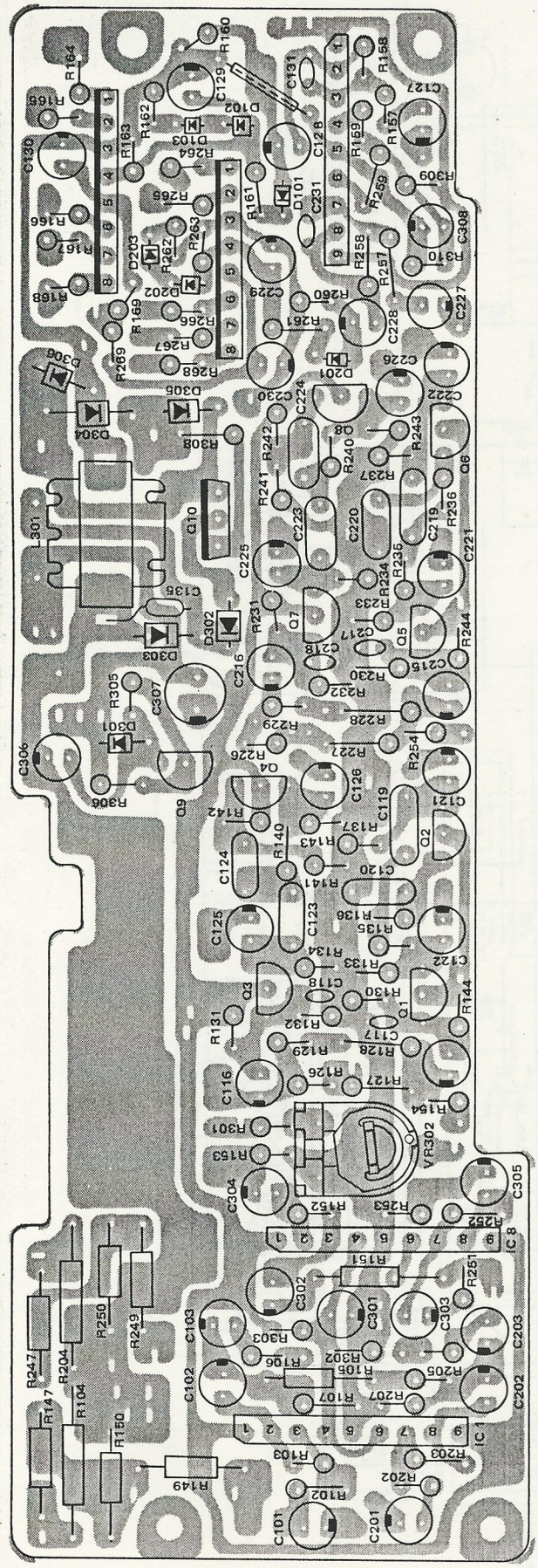

Top View

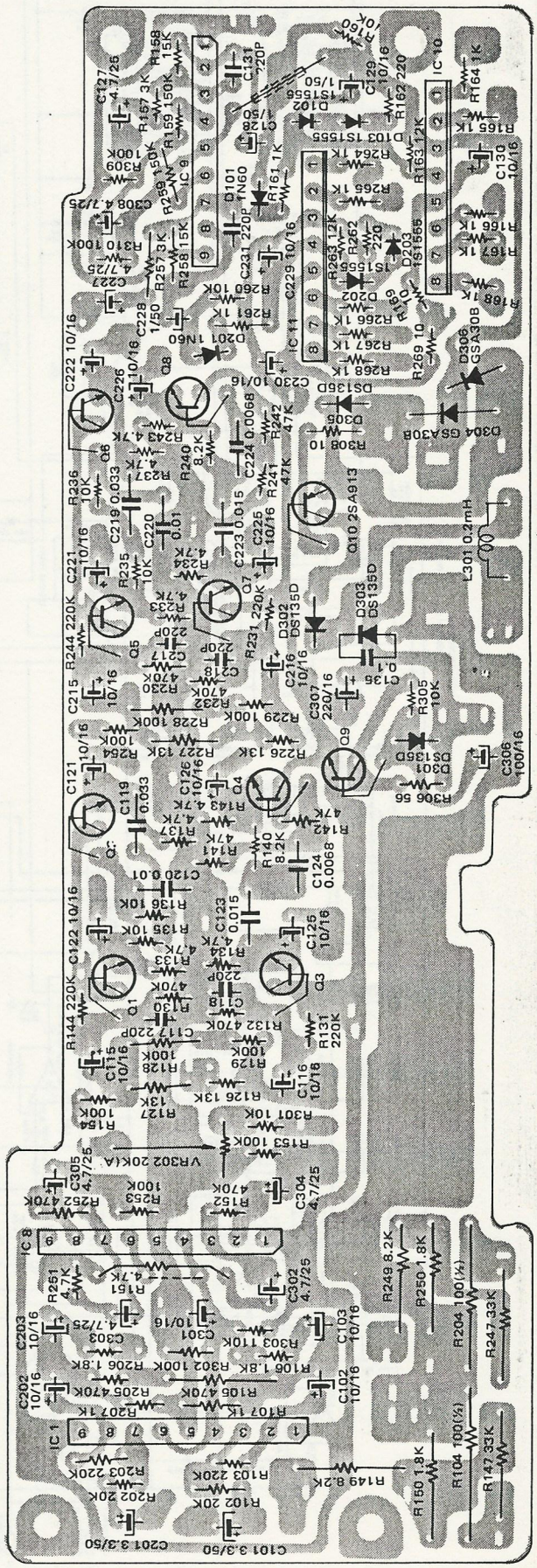

Bottom View

Equalizer P.C.Board

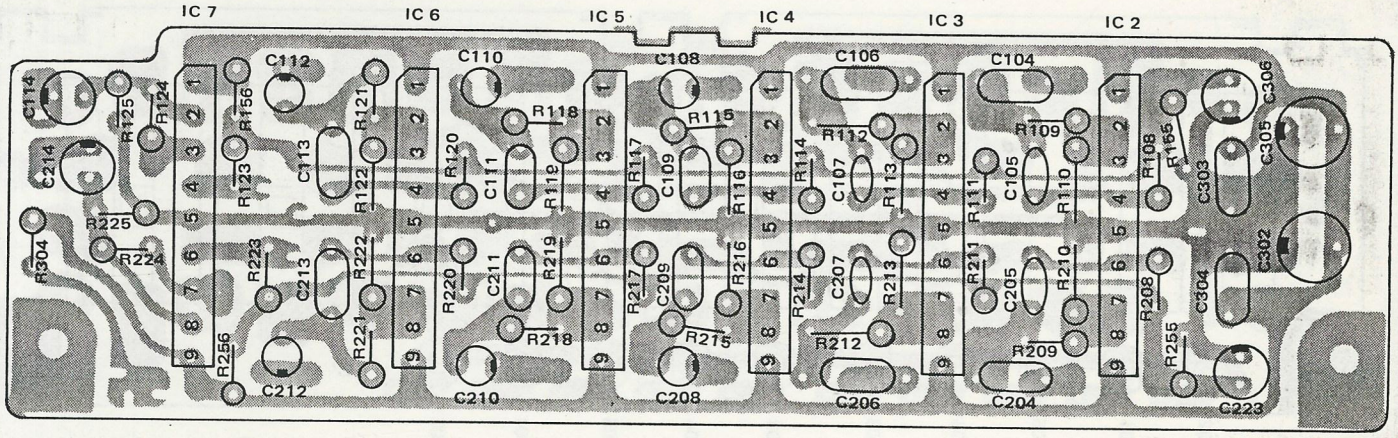

Top View

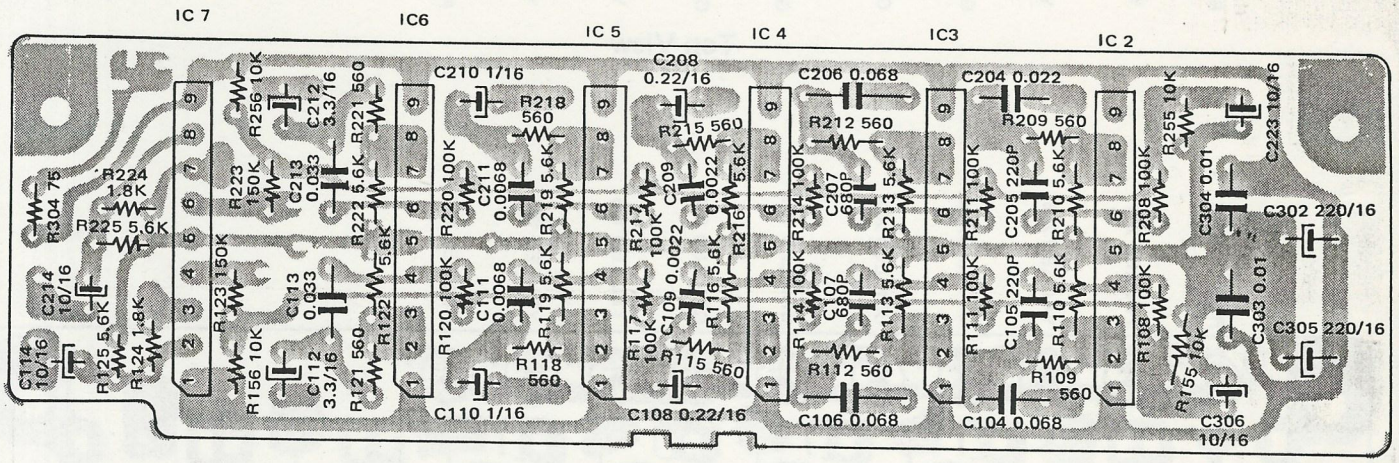

Bottom View

Switch P.C.Board

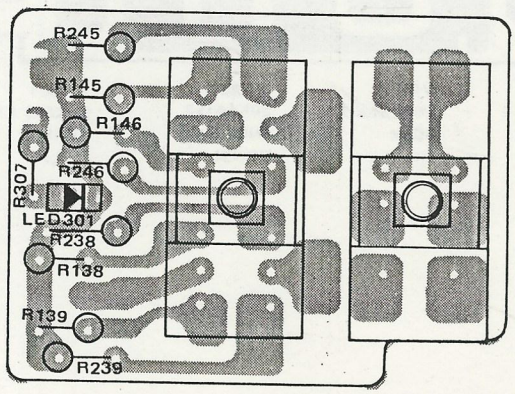

Top View

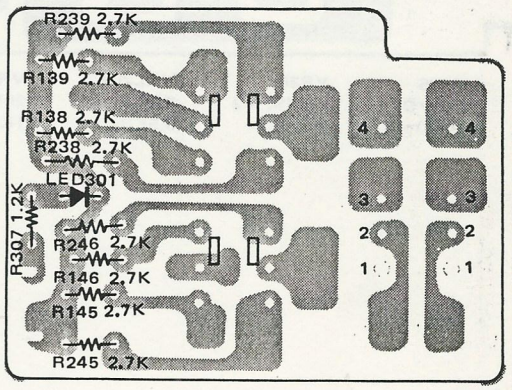

Bottom View

Volume P.C.Board

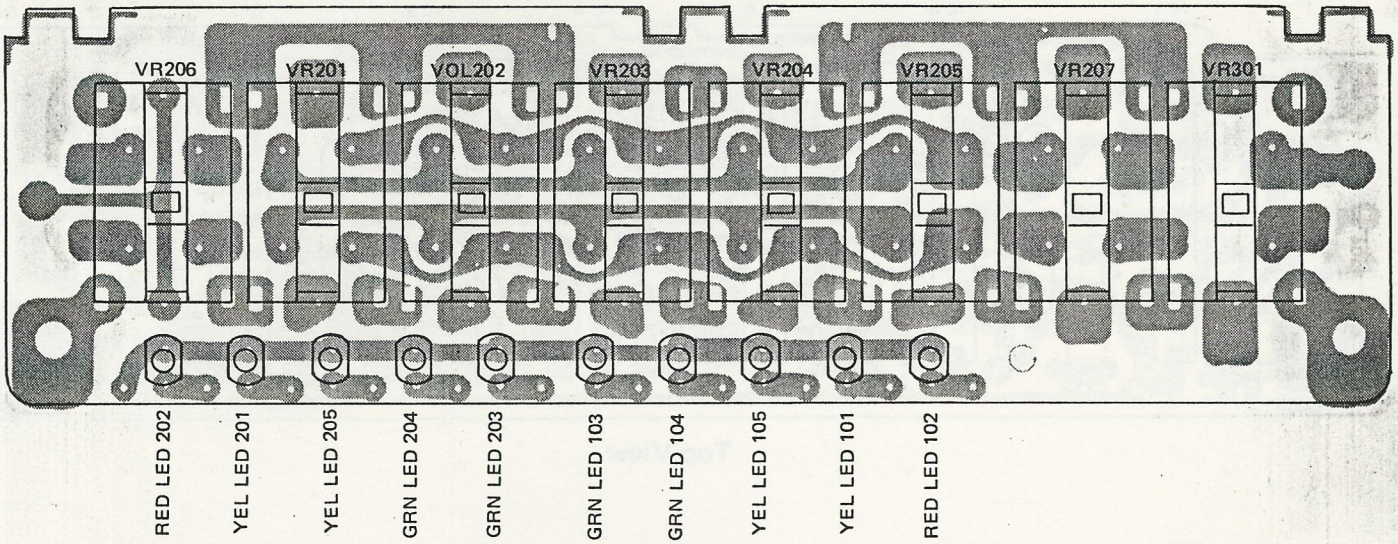

Top View

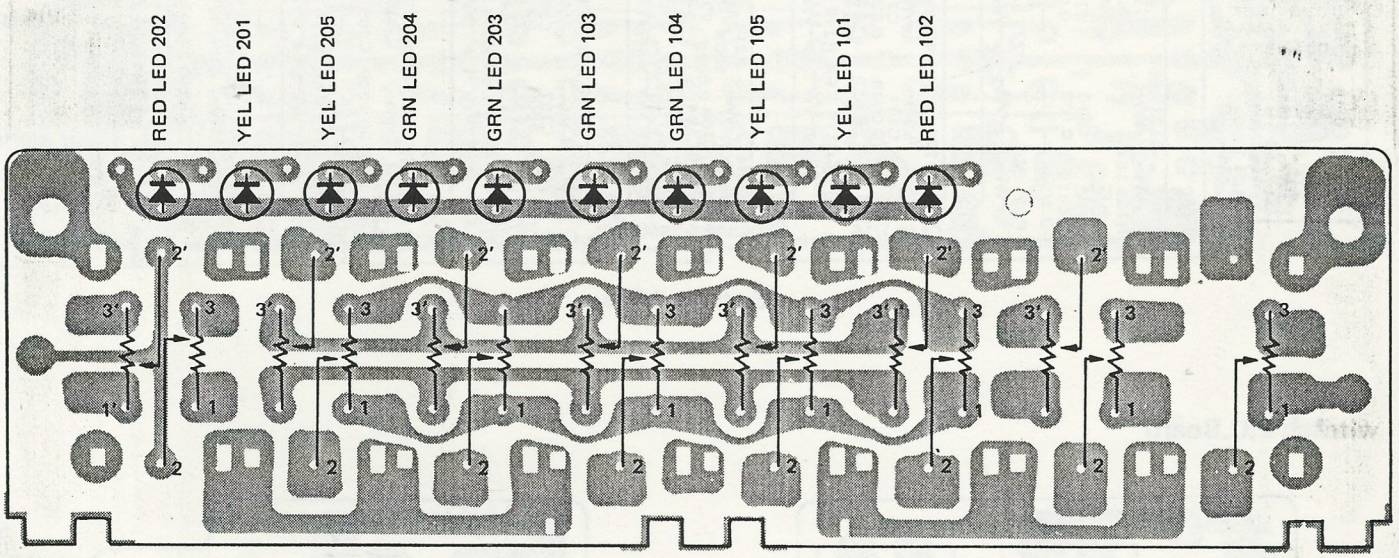

VR206	VR201	VOL202	VR203	VR204	VR205	VR207	VR301
FAD VOL 50K(B) x 2	20K(B) x 2 10KHz	20K(B) x 2 3.5KHz	20K(B) x 2 1KHz	20K(B) x 2 250Hz	20K(B) x 2 60Hz	20K(A)x2 INPUT SENSI	20K(A) x 1 TIME DELAY

Bottom View

Wiring Diagram

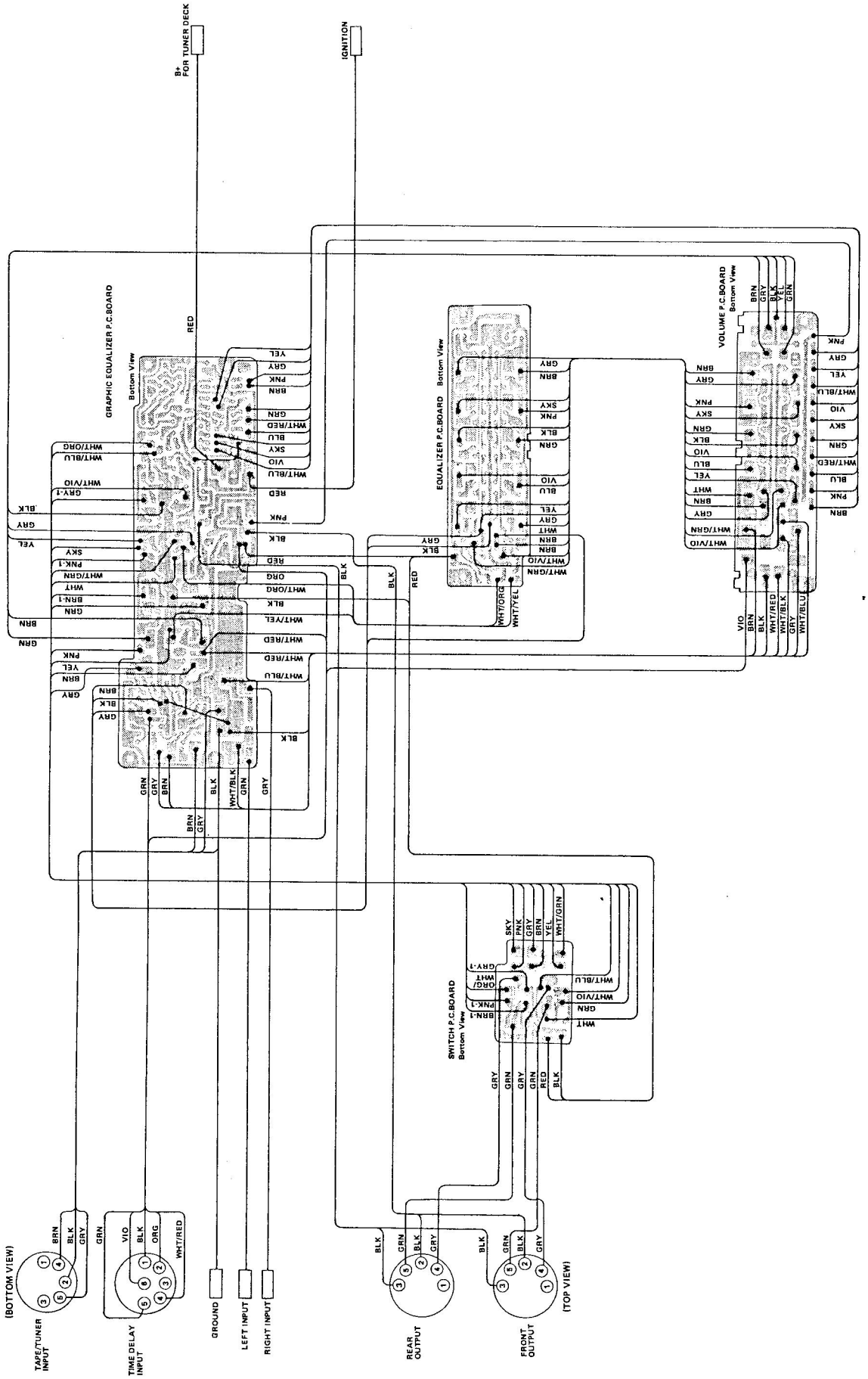

Exploded View

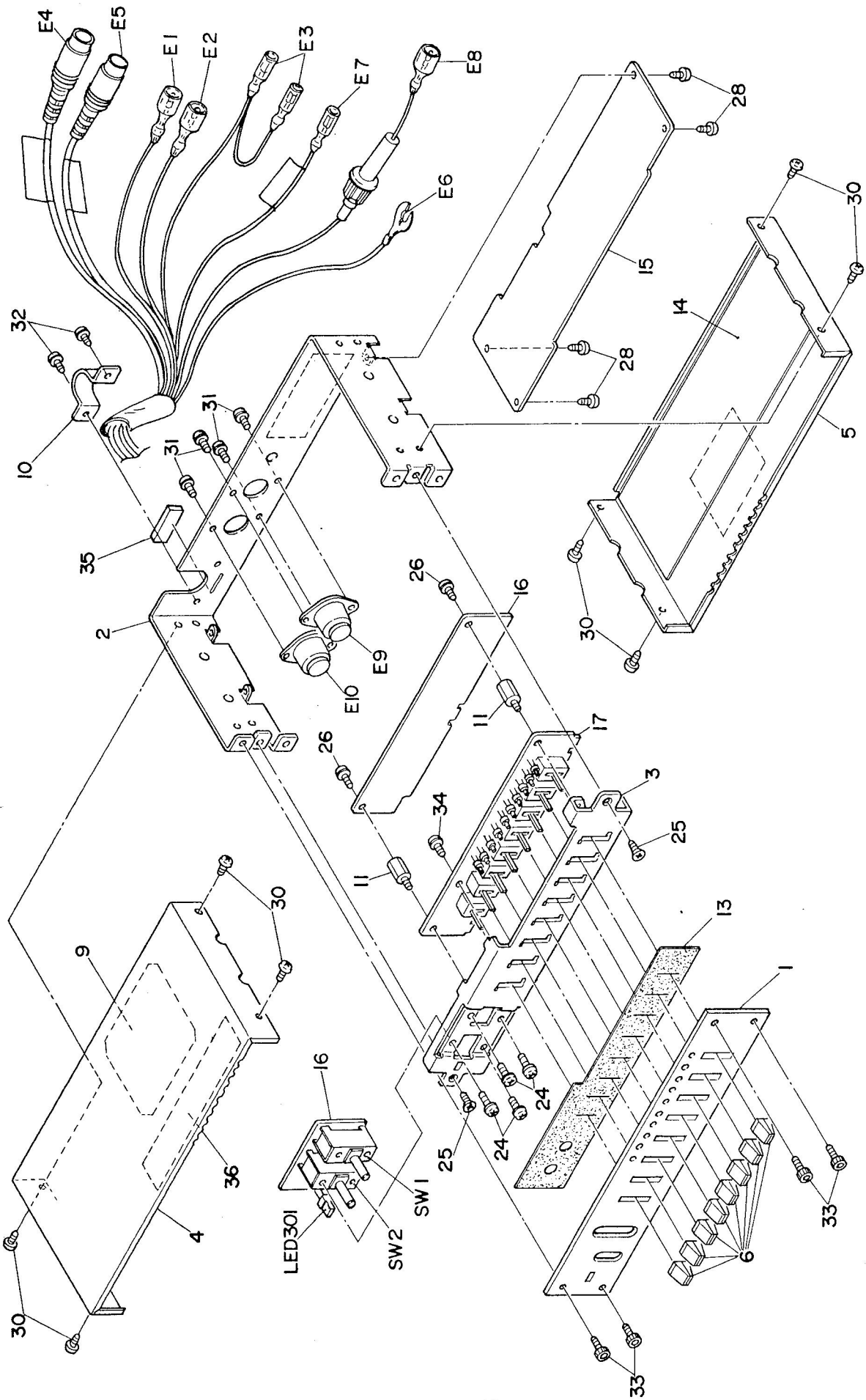

Semi-Conductor Lead Indentifications

2SA913

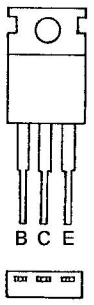

2SD400

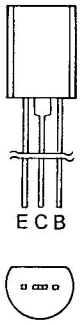

2SD879

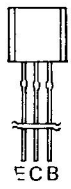

AN6551

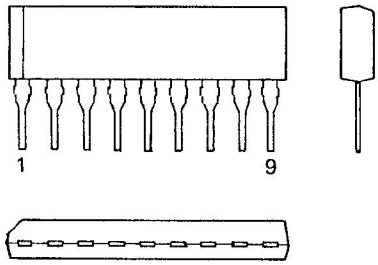

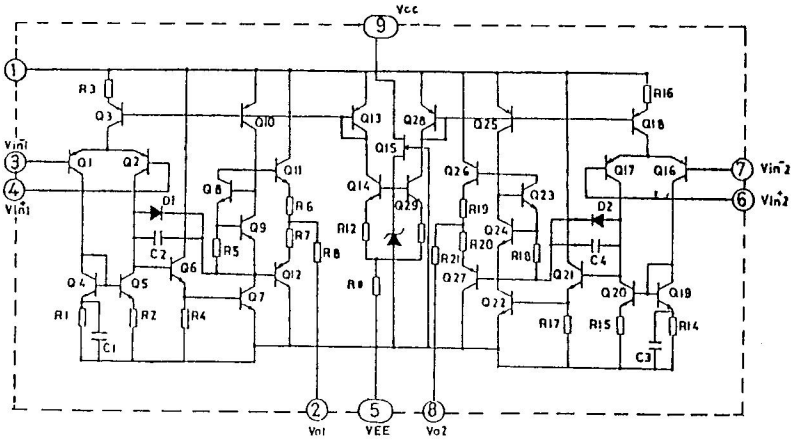

M51903L

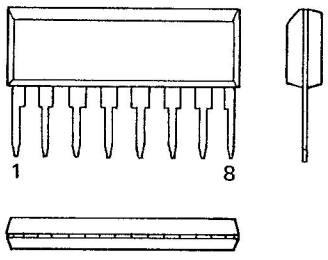

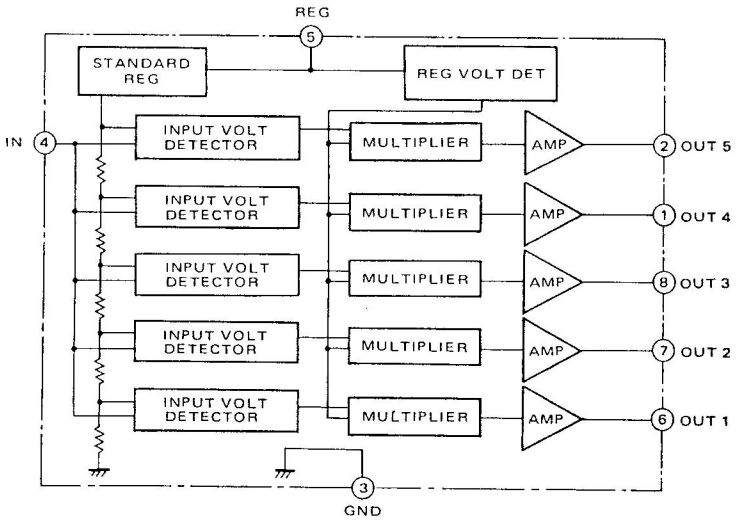

Parts List

Symbol No.	Part No.	Description
Graphic Equalizer P.C. Board		
IC		
IC1	149-5033-001-0	AN6551
IC8	149-5033-001-0	AN6551
IC9	149-5033-001-0	AN6551
IC10	149-5034-001-0	M51903L
IC11	149-5034-001-0	M51903L
Transistors		
Q1	148-5068-001	2SC2236
Q1	148-5020-001	2SD400
Q2	148-5068-001	2SC2236
Q2	148-5020-001	2SD400
Q3	148-5068-001	2SC2236
Q3	148-5020-001	2SD400
Q4	148-5068-001	2SD2236
Q4	148-5020-001	2SD400
Q5	148-5068-001	2SC2236
Q5	148-5020-001	2SD400
Q6	148-5068-001	2SC2236
Q6	148-5020-001	2SC400
Q7	148-5068-001	2SC2236
Q7	148-5020-001	2SD400
Q8	148-5068-001	2SC2236
Q8	148-5020-001	2SD400
Q9	148-5069-001	2SC2500
Q9	148-5070-001	2SC879
Q10	148-5061-001	2SA913
Diodes		
D101	148-5044-001-0	1N60
D102	148-5027-001-0	1S1555
D103	148-5027-001-0	1S1555
D201	148-5044-001-0	1N60
D202	148-5027-001-0	1S1555
D203	148-5027-001-0	1S1555
D301	148-5034-002-0	DS135D
D302	148-5034-002-0	DS135D
D303	148-5034-002-0	DS135D
D304	148-5062-001-0	GSA30B
D305	148-5034-002-0	DS135D
D306	148-5062-001-0	GSA30B
Capacitors		
C101	116-5088-335-0	Electrolytic 3.3 μF 50WV
C102	116-5088-106-0	Electrolytic 10 μF 16WV
C103	116-5088-106-0	Electrolytic 10 μF 16WV
C115	116-5088-106-0	Electrolytic 10 μF 16WV
C116	116-5088-106-0	Electrolytic 10 μF 16WV
C117	116-5043-221-0	Ceramic 220 pF
C118	116-5043-221-0	Ceramic 220 pF

Symbol No.	Part No.	Description
C119	116-5084-333-0	Mylar 0.033 μF
C120	116-5084-103-0	Mylar 0.01 μF
C121	116-5080-106-0	Electrolytic 10 μF 16WV
C122	116-5080-106-0	Electrolytic 10 μF 16WV
C123	116-5084-153-0	Mylar 0.015 μF
C124	116-5084-682-0	Mylar 0.0068 μF
C125	116-5080-106-0	Electrolytic 10 μF 16WV
C126	116-5080-106-0	Electrolytic 10 μF 16WV
C127	116-5081-475	Electrolytic 4.7 μF 25WV
C128	116-5088-105-0	Electrolytic 1 μF 50WV
C129	116-5080-106	Electrolytic 10 μF 16WV
C130	116-5080-106	Electrolytic 10 μF 16WV
C131	116-5043-221-0	Ceramic 220 pF
C135	116-5119-104-0	Ceramic 0.1 μF
C201	116-5088-335-0	Electrolytic 3.3 μF 50WV
C202	116-5080-106-0	Electrolytic 10 μF 16WV
C203	116-5080-106-0	Electrolytic 10 μF 16WV
C215	116-5080-106-0	Electrolytic 10 μF 16WV
C216	116-5080-106-0	Electrolytic 10 μF 16WV
C217	116-5043-221-0	Ceramic 220 pF
C218	116-5043-221-0	Ceramic 220 pF
C219	116-5084-333-0	Mylar 0.033 μF
C220	116-5084-103-0	Mylar 0.01 μF
C221	116-5080-106-0	Electrolytic 10 μF 16WV
C222	116-5080-106-0	Electrolytic 10 μF 16WV
C223	116-5084-153-0	Mylar 0.015 μF
C224	116-5084-682-0	Mylar 0.0068 μF
C225	116-5080-106-0	Electrolytic 10 μF 16WV
C226	116-5080-106-0	Electrolytic 10 μF 16WV
C227	116-5081-475	Electrolytic 4.7 μF 25WV
C228	116-5088-105-0	Electrolytic 1 μF 50WV
C229	116-5080-106-0	Electrolytic 10 μF 16WV
C230	116-5080-106-0	Electrolytic 10 μF 16WV
C231	116-5043-221-0	Ceramic 220 pF
C301	116-5080-106-0	Electrolytic 10 μF 16WV
C302	116-5081-475	Electrolytic 4.7 μF 25WV
C303	116-5081-475	Electrolytic 4.7 μF 25WV
C304	116-5081-475	Electrolytic 4.7 μF 25WV
C305	116-5081-475	Electrolytic 4.7 μF 25WV
C306	116-5092-107-0	Electrolytic 100 μF 16WV
C307	116-5094-227-0	Electrolytic 220 μF 16WV
C308	116-5081-475	Electrolytic 4.7 μF 25WV
Resistors		
R102	142-5043-203-0	Carbon Film 20K ohm ¼W
R103	142-5043-224-0	Carbon Film 220K ohm ¼W
R104	142-5010-101-0	Micro Film 100 ohm ½W
R105	142-5044-474-0	Carbon Film 470K ohm ¼W
R106	142-5043-182-0	Carbon Film 1.8K ohm ¼W
R107	142-5043-102-0	Carbon Film 1K ohm ¼W
R126	142-5043-133-0	Carbon Film 13K ohm ¼W
R127	142-5043-133-0	Carbon Film 13K ohm ¼W

Symbol No.	Part No.	Description
R128	142-5043-104-0	Carbon Film 100K ohm ¼W
R129	142-5043-104-0	Carbon Film 100K ohm ¼W
R130	142-5043-474-0	Carbon Film 470K ohm ¼W
R131	142-5043-224-0	Carbon Film 220K ohm ¼W
R132	142-5043-474-0	Carbon Film 470K ohm ¼W
R133	142-5043-472-0	Carbon Film 4.7K ohm ¼W
R134	142-5043-472-0	Carbon Film 4.7K ohm ¼W
R135	142-5043-103-0	Carbon Film 10K ohm ¼W
R136	142-5043-103-0	Carbon Film 10K ohm ¼W
R137	142-5043-472-0	Carbon Film 4.7K ohm ¼W
R140	142-5043-822-0	Carbon Film 8.2K ohm ¼W
R141	142-5043-473-0	Carbon Film 47K ohm ¼W
R142	142-5043-473-0	Carbon Film 47K ohm ¼W
R143	142-5043-472-0	Carbon Film 4.7K ohm ¼W
R144	142-5043-224-0	Carbon Film 220K ohm ¼W
R147	142-5044-333-0	Carbon Film 33K ohm ¼W
R149	142-5044-822-0	Carbon Film 8.2K ohm ¼W
R150	142-5044-182-0	Carbon Film 1.8K ohm ¼W
R151	142-5044-472-0	Carbon Film 4.7K ohm ¼W
R152	142-5043-474-0	Carbon Film 470K ohm ¼W
R153	142-5043-104-0	Carbon Film 100K ohm ¼W
R154	142-5043-104-0	Carbon Film 100K ohm ¼W
R157	142-5043-302-0	Carbon Film 3K ohm ¼W
R158	142-5043-153-0	Carbon Film 15K ohm ¼W
R159	142-5043-154-0	Carbon Film 150K ohm ¼W
R160	142-5043-103-0	Carbon Film 10K ohm ¼W
R161	142-5043-102-0	Carbon Film 1K ohm ¼W
R162	142-5043-221-0	Carbon Film 220 ohm ¼W
R163	142-5043-123-0	Carbon Film 12K ohm ¼W
R164	142-5043-102-0	Carbon Film 1K ohm ¼W
R165	142-5043-102-0	Carbon Film 1K ohm ¼W
R166	142-5043-102-0	Carbon Film 1K ohm ¼W
R167	142-5043-102-0	Carbon Film 1K ohm ¼W
R168	142-5043-102-0	Carbon Film 1K ohm ¼W
R169	142-5043-100-0	Carbon Film 10 ohm ¼W
R202	142-5043-203-0	Carbon Film 20K ohm ¼W
R203	142-5043-224-0	Carbon Film 220K ohm ¼W
R204	142-5010-101-0	Micro Film 100 ohm ½W
R205	142-5043-474-0	Carbon Film 470K ohm ¼W
R206	142-5043-182-0	Carbon Film 1.8K ohm ¼W
R207	142-5043-102-0	Carbon Film 1K ohm ¼W
R226	142-5043-133-0	Carbon Film 13K ohm ¼W
R227	142-5043-133-0	Carbon Film 13K ohm ¼W
R228	142-5043-104-0	Carbon Film 100K ohm ¼W
R229	142-5043-104-0	Carbon Film 100K ohm ¼W
R230	142-5043-474-0	Carbon Film 470K ohm ¼W
R231	142-5043-224-0	Carbon Film 220K ohm ¼W
R232	142-5043-474-0	Carbon Film 470K ohm ¼W
R233	142-5043-472-0	Carbon Film 4.7K ohm ¼W
R234	142-5043-472-0	Carbon Film 4.7K ohm ¼W
R235	142-5043-103-0	Carbon Film 10K ohm ¼W
R236	142-5043-103-0	Carbon Film 10K ohm ¼W

Symbol No.	Part No.	Description
R237	142-5043-472-0	Carbon Film 4.7K ohm ¼W
R240	142-5043-822-0	Carbon Film 8.2K ohm ¼W
R241	142-5043-473-0	Carbon Film 47K ohm ¼W
R242	142-5043-473-0	Carbon Film 47K ohm ¼W
R243	142-5043-472-0	Carbon Film 4.7K ohm ¼W
R244	142-5043-224-0	Carbon Film 220K ohm ¼W
R247	142-5044-333-0	Carbon Film 33K ohm ¼W
R249	142-5044-822-0	Carbon Film 8.2K ohm ¼W
R250	142-5044-182-0	Carbon Film 1.8K ohm ¼W
R251	142-5043-472-0	Carbon Film 4.7K ohm ¼W
R252	142-5043-474-0	Carbon Film 470K ohm ¼W
R253	142-5043-104-0	Carbon Film 100K ohm ¼W
R254	142-5043-104-0	Carbon Film 100K ohm ¼W
R257	142-5043-302-0	Carbon Film 3K ohm ¼W
R258	142-5043-153-0	Carbon Film 15K ohm ¼W
R259	142-5043-154-0	Carbon Film 150K ohm ¼W
R260	142-5043-103-0	Carbon Film 10K ohm ¼W
R261	142-5043-102-0	Carbon Film 1K ohm ¼W
R262	142-5043-221-0	Carbon Film 220 ohm ¼W
R263	142-5043-123-0	Carbon Film 12K ohm ¼W
R264	142-5043-102-0	Carbon Film 1K ohm ¼W
R265	142-5043-102-0	Carbon Film 1K ohm ¼W
R266	142-5043-102-0	Carbon Film 1K ohm ¼W
R267	142-5043-102-0	Carbon Film 1K ohm ¼W
R268	142-5043-102-0	Carbon Film 1K ohm ¼W
R269	142-5043-100-0	Carbon Film 10 ohm ¼W
R301	142-5043-103-0	Carbon Film 10K ohm ¼W
R302	142-5043-104-0	Carbon Film 100K ohm ¼W
R303	142-5043-114-0	Carbon Film 110K ohm ¼W
R305	142-5043-103-0	Carbon Film 10K ohm ¼W
R306	142-5043-560-0	Carbon Film 56 ohm ¼W
R308	142-5043-100-0	Carbon Film 10 ohm ¼W
R309	142-5043-104-0	Carbon Film 100K ohm ¼W
R310	142-5043-104-0	Carbon Film 100K ohm ¼W
VR302	142-5061-006-0	Variable Resistor 20K ohm
Coil		
L301	118-5035-001-0	Choke Coil 0.2mH

Equalizer/Switch P.C. Board

ICs		
IC1	149-5033-001-0	AN6551
IC2	149-5033-001-0	AN6551
IC3	149-5033-001-0	AN6551
IC4	149-5033-001-0	AN6551
IC5	149-5033-001-0	AN6551
IC6	149-5033-001-0	AN6551
IC7	149-5033-001-0	AN6551

Symbol No.	Part No.	Description
Capacitors		
C104	116-5084-223-0	Mylar 0.022 μF
C105	116-5042-221-0	Ceramic 220 pF
C106	116-5084-683-0	Mylar 0.068 μF
C107	116-5043-681-0	Ceramic 680 pF
C108	116-5057-224-0	Tantalum 0.22 μF 16WV
C109	116-5084-222-0	Mylar 0.0022 μF
C110	116-5057-105-0	Tantalum 1 μF 16WV
C111	116-5084-682-0	Mylar 0.0068 μF
C112	116-5063-335-0	Tantalum 3.3 μF 16WV
C113	116-5084-333-0	Mylar 0.033 μF
C114	116-5080-106-0	Electrolytic 10 μF 16WV
C204	116-5084-223-0	Mylar 0.022 μF
C205	116-5042-221-0	Ceramic 220 pF
C206	116-5084-683-0	Mylar 0.068 μF
C207	116-5043-681-0	Ceramic 680 pF
C208	116-5057-224-0	Tantalum 0.22 μF 16WV
C209	116-5084-222-0	Mylar 0.0022 μF
C210	116-5057-105-0	Tantalum 1 μF 16WV
C211	116-5084-682-0	Mylar 0.0068 μF
C212	116-5063-335-0	Tantalum 3.3 μF 16WV
C213	116-5084-333-0	Mylar 0.033 μF
C214	116-5080-106-0	Electrolytic 10 μF 16WV
C233	116-5080-106-0	Electrolytic 10 μF 16WV
C302	116-5094-227-0	Electrolytic 220 μF 16WV
C303	116-5084-103-0	Mylar 0.01 μF
C304	116-5084-103-0	Mylar 0.01 μF
C305	116-5094-227-0	Electrolytic 220 μF 16WV
C306	116-5080-106-0	Electrolytic 10 μF 16WV
Resistors		
R108	142-5043-104-0	Carbon Film 100K ohm ¼W
R109	142-5043-561-0	Carbon Film 560 ohm ¼W
R110	142-5043-562-0	Carbon Film 5.6K ohm ¼W
R111	142-5043-104-0	Carbon Film 100K ohm ¼W
R112	142-5043-561-0	Carbon Film 560 ohm ¼W
R113	142-5043-562-0	Carbon Film 5.6K ohm ¼W
R114	142-5043-104-0	Carbon Film 100K ohm ¼W
R115	142-5043-561-0	Carbon Film 560 ohm ¼W
R116	142-5043-562-0	Carbon Film 5.6K ohm ¼W
R117	142-5043-104-0	Carbon Film 100K ohm ¼W
R118	142-5043-561-0	Carbon Film 560 ohm ¼W
R119	142-5043-562-0	Carbon Film 5.6K ohm ¼W
R120	142-5043-104-0	Carbon Film 100K ohm ¼W
R121	142-5043-561-0	Carbon Film 560 ohm ¼W
R122	142-5043-562-0	Carbon Film 5.6K ohm ¼W
R123	142-5043-154-0	Carbon Film 150K ohm ¼W
R124	143-5043-182-0	Carbon Film 1.8K ohm ¼W
R125	142-5043-562-0	Carbon Film 5.6K ohm ¼W
R138	142-5043-272-0	Carbon Film 2.7K ohm ¼W
R139	142-5043-272-0	Carbon Film 2.7K ohm ¼W
R145	142-5043-272-0	Carbon Film 2.7K ohm ¼W
R146	142-5043-272-0	Carbon Film 2.7K ohm ¼W

Symbol No.	Part No.	Description
R155	142-5043-103-0	Carbon Film 10K ohm ¼W
R156	142-5043-103-0	Carbon Film 10K ohm ¼W
R208	142-5043-104-0	Carbon Film 100K ohm ¼W
R209	142-5043-561-0	Carbon Film 560 ohm ¼W
R210	142-5043-562-0	Carbon Film 5.6K ohm ¼W
R211	142-5043-104-0	Carbon Film 100K ohm ¼W
R212	142-5043-561-0	Carbon Film 560 ohm ¼W
R213	142-5043-562-0	Carbon Film 5.6K ohm ¼W
R214	142-5043-104-0	Carbon Film 100K ohm ¼W
R215	142-5043-561-0	Carbon Film 560 ohm ¼W
R216	142-5043-562-0	Carbon Film 5.6K ohm ¼W
R217	142-5043-104-0	Carbon Film 100K ohm ¼W
R218	142-5043-561-0	Carbon Film 560 ohm ¼W
R219	142-5043-562-0	Carbon Film 5.6K ohm ¼W
R220	142-5043-104-0	Carbon Film 100K ohm ¼W
R221	142-5043-561-0	Carbon Film 560 ohm ¼W
R222	142-5043-562-0	Carbon Film 5.6K ohm ¼W
R223	142-5043-154-0	Carbon Film 150K ohm ¼W
R224	142-5043-182-0	Carbon Film 1.8K ohm ¼W
R225	142-5043-562-0	Carbon Film 5.6K ohm ¼W
R238	142-5043-272-0	Carbon Film 2.7K ohm ¼W
R239	142-5043-272-0	Carbon Film 2.7K ohm ¼W
R245	142-5043-272-0	Carbon Film 2.7K ohm ¼W
R246	142-5043-272-0	Carbon Film 2.7K ohm ¼W
R255	142-5043-103-0	Carbon Film 10K ohm ¼W
R256	142-5043-103-0	Carbon Film 10K ohm ¼W
R304	142-5043-750-0	Carbon Film 75 ohm ¼W
R307	142-5043-122-0	Carbon Film 1.2K ohm ¼W
Miscellaneous		
LED301	148-5063-001-0	LED PR5531K
SW1	151-5041-001-0	Lever Switch SLE62308A 2-3
SW2	151-5042-001-0	Lever Switch SLE64207A 4-2
	117-5104-013-2	Panel Sub
Volume P.C. Board		
VR201	142-5064-002-1	Variable Resistor 20K(B)x2
VR202	142-5064-002-1	Variable Resistor 20K(B)x2
VR203	142-5064-002-1	Variable Resistor 20K(B)x2
VR204	142-5064-002-1	Variable Resistor 20K(B)x2
VR205	142-5064-002-1	Variable Resistor 20K(B)x2
VR206	142-5064-003-1	Variable Resistor 50K(B)x2
VR207	142-5064-004-0	Variable Resistor 20K(B)x2
VR301-1	142-5065-001-1	Variable Resistor 20K(A)
LED101	148-5065-002-0	LED TLY226
LED102	148-5065-001-0	LED TLR226
LED103	148-5065-003-0	LED TLG226
LED104	148-5065-003-0	LED TLG226
LED105	148-5065-002-0	LED TLY226
LED201	148-5065-002-0	LED TLY226
LED202	148-5065-001-0	LED TLR226
LED203	148-5065-003-0	LED TLG226

Symbol No.	Part No.	Description
LED204	148-5065-003-0	LED TLG226
LED205	148-5065-002-0	LED TLY226
Miscellaneous		
	117-5104-014	Volume P.C.Board
General Assembly Parts		
1	114-5113-001	Panel Front
2	214-5114-001	Frame
3	214-5115-001	Frame Front
4	214-5116-001	Cover, Top
5	214-5116-002	Cover, Bottom
6	124-5168-001	Knob, GEQ VR
9	131-5036-001	Insulator
10	125-5508-001	Clamp, Output Wire
11	128-5032-001	Spacer
13	131-5065-001	Curtain, Volume
14	131-5067-001	Bake Shield
15	189-5529	Ass'y, Panel Graphic Equalizer
16	189-5530	Ass'y, Panel Sub (Equalizer/Switch)
17	189-5531	Ass'y, Panel Volume
E1	160-5120-001	Input Wire (Left)
E2	160-5120-002	Input Wire (Right)
E3	160-5121-001	Earth Wire
E4	160-5110-001	5 Pin Din Plug Cord
E5	160-5110-001	5 Pin Din Plug Cord
E6	160-5119-001	Ground Wire
E7	160-5118-001	Remote Cord
E8	160-5122-002	Power Cord W/Fuse Holder
E9	121-5039-001	6 Pin Din Socket
E10	121-5026-001	5 Pin Din Socket
24	129-2604-009-0	Screw., Mch. M2.6W x 4
25	129-2605-010-0	Screw., Mch. M2.6 x 5
26	129-2605-009-0	Screw., Mch. M2.6W x 5
28	129-2605-040-0	Screw., Mch. M2.6 x 5
30	129-2604-040-4	Screw., Mch. M2.6 x 4
31	129-2605-009-1	Screw., Mch. M2.6W x 5
32	129-3004-009-1	Screw., Mch. M3 x 4
33	129-5031-001-3	Bolt Hexagon M3 x 6
34	129-2004-009-0	Screw., Mch. M2W x 4
36	131-5077-001	Insulator
Packing Assembly Parts		
101	123-5134-001	Label Comp.
102	123-5136-001	Label Rear
103	150-5161-001	Carton Individual Packing
104	150-5162-001	Carton, Master Packing
105	150-5163-001	Packing
106	350-5164-001	Tray Packing

Symbol No.	Part No.	Description
107	193-5044-001	Owner's Guide
109	150-5158-001	Card, Warranty
110	150-5159-001	Card, Survey
111	150-5160-001	Card, Service Station List
112	150-0013-007	Stay
113	150-5167-001	Bracket, Mounting
114	123-5182-001	Number, Label
115	128-5029-001	Bolt Hexagon M5x20
116	128-5030-001	Bolt Hexagon M5x10
117	129-5020-160-4	Screw M5x20
118	129-5000-401-4	Nut Hexagon M5
119	129-5000-505-8	Toothed Lock Washer 5ϕ
120	129-4010-160-4	Screw, Mch. M4x10
121	129-4000-504-8	Toothed Lock Washer 4ϕ
122	151-5007-004	Fuse 4A
123	150-5053-001	Polyethylene Bag (70 x 100)
124	150-5053-011	Polyethylene Bag (200 x 300)
125	150-5042-007	Polyethylene Bag (120 x 230)
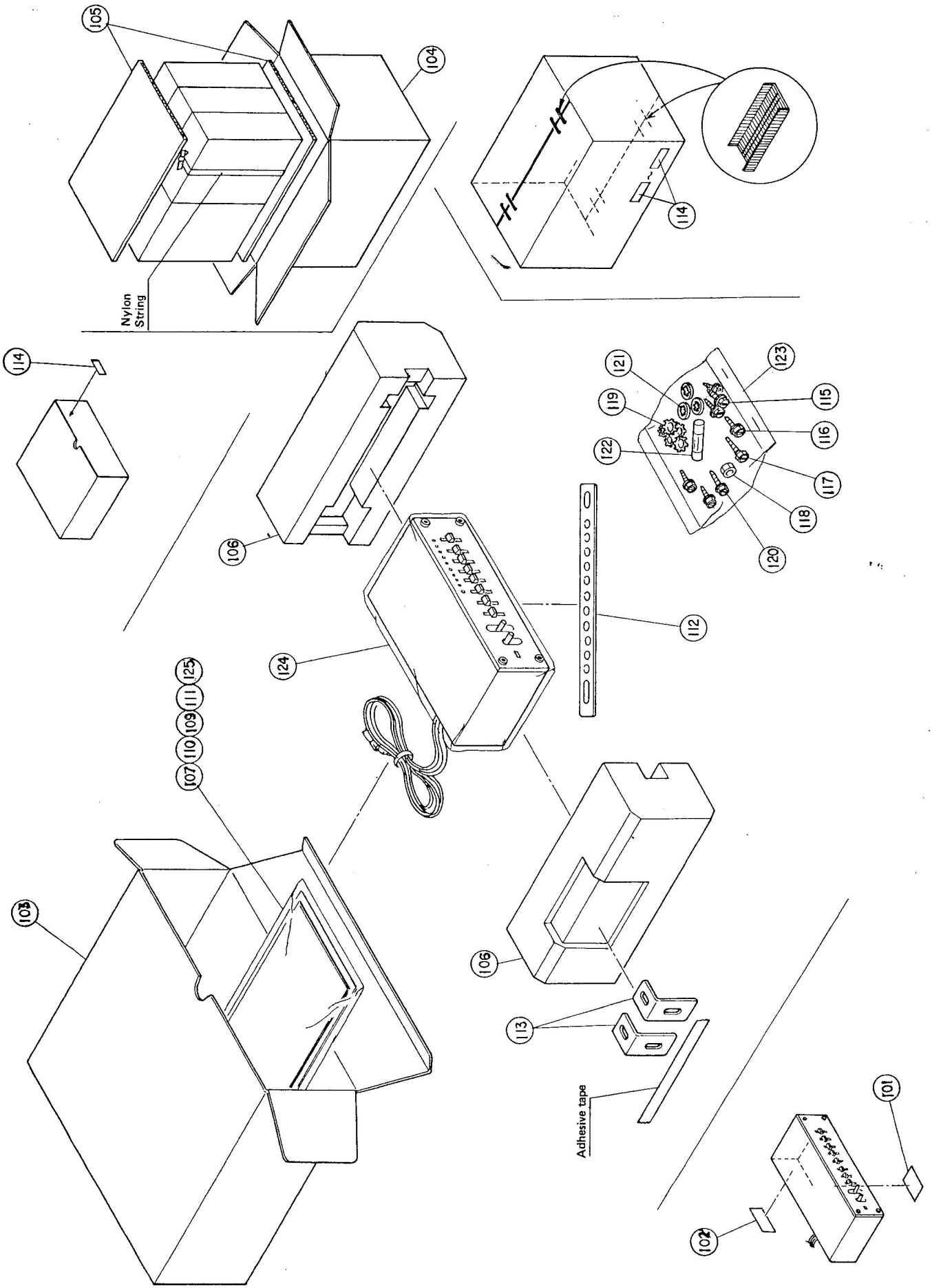
Packing Method