DENNIS

ALPINE SERVICE MANUAL

20W+20W Bi-Level/5-Band Graphic Equalizer

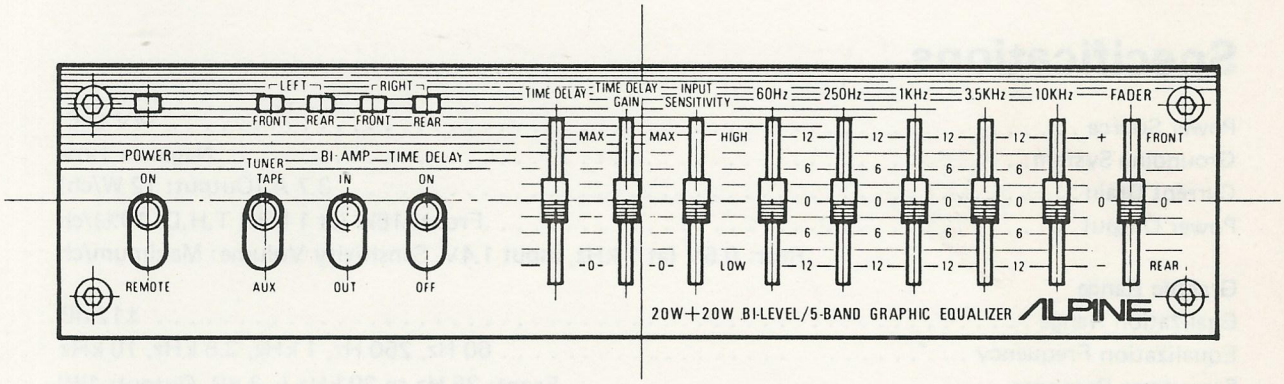

3007

Contents

Specifications 2
Parts Location and Disassembly Instructions . . . . . 3 to 4
Trouble Shooting . . . . . 5 to 6
Block Diagram 6
Parts Layout on P.C.Boards . . . . . 7 to 8
Wiring Diagram . . . . . 9 to 10
Schematic Diagram . . . . . 11 to 12
Exploded View . . . . . 13 to 14
Semi-Conductor Lead Identifications 15
Packing Method 15
Parts List . . . . . 16 to 20

Specifications

Power Source	14V D.C.
Grounding System	Negative Type
Current Drain	3.7 A (Output: 12 W/ch)
Power Output	Front: 16W (at 1 kHz, T.H.D. 10%)/ch Rear: 0.5V (at 1 kHz, input 1.4V, Sensitivity Volume: Maximum/ch
Graphic Range	
Eqalization Range	±12 dB
Equalization Frequency	60 Hz, 250 Hz, 1 kHz, 3.5 kHz, 10 kHz
Frequency Response	Front: 35 Hz to 20 kHz (–3 dB, Output: 1W) Rear: 35 Hz to 20 kHz (–3 dB, Output: 0.5V)
Output Noise	1μW (Input: Short)
Input Sensitivity	Front: 1V (Output: 12W/1 kHz, Sensitivity Volume: Maximum) Rear: 1.4V (Output: 0.5V/1 kHz, Sensitivity Volume: Maximum)
Input Sensitivity	1V (Output: 12 W/1 kHz, Sensitivity Volume: Maximum)
Bi-Amp Frequency Response	–14 ±3 dB (Front: 500 Hz, Rear: 2 kHz)
Time Delay	2±1 second (Time Delay Gain Control: Maximum, Time Delay Control: Maximum)
Input Select	Tuner/Tape, AUX.
Load Impedance	Front: 4Ω Rear: 10KΩ
Semi-Conductors	10 ICs, 17 Transistors, 7 Diodes, 5 LEDs
Dimensions	180 (W) x 42.6 (H) x 145 (D) mm
Weight	1 kg

Parts Location and Disassembly Instructions

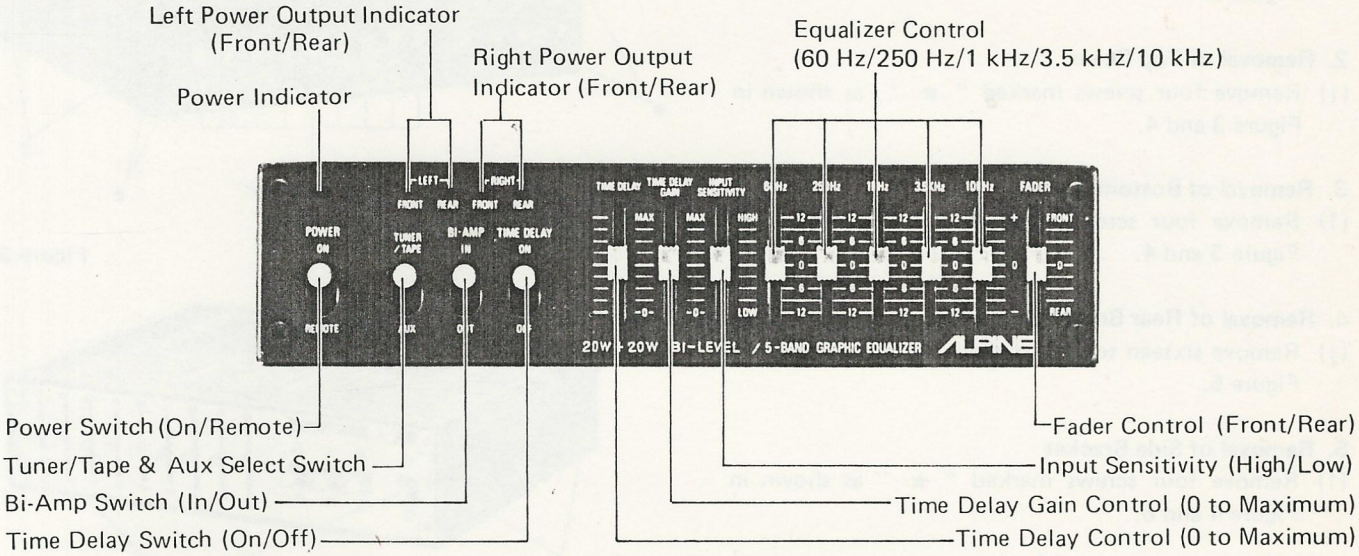

Figure 1

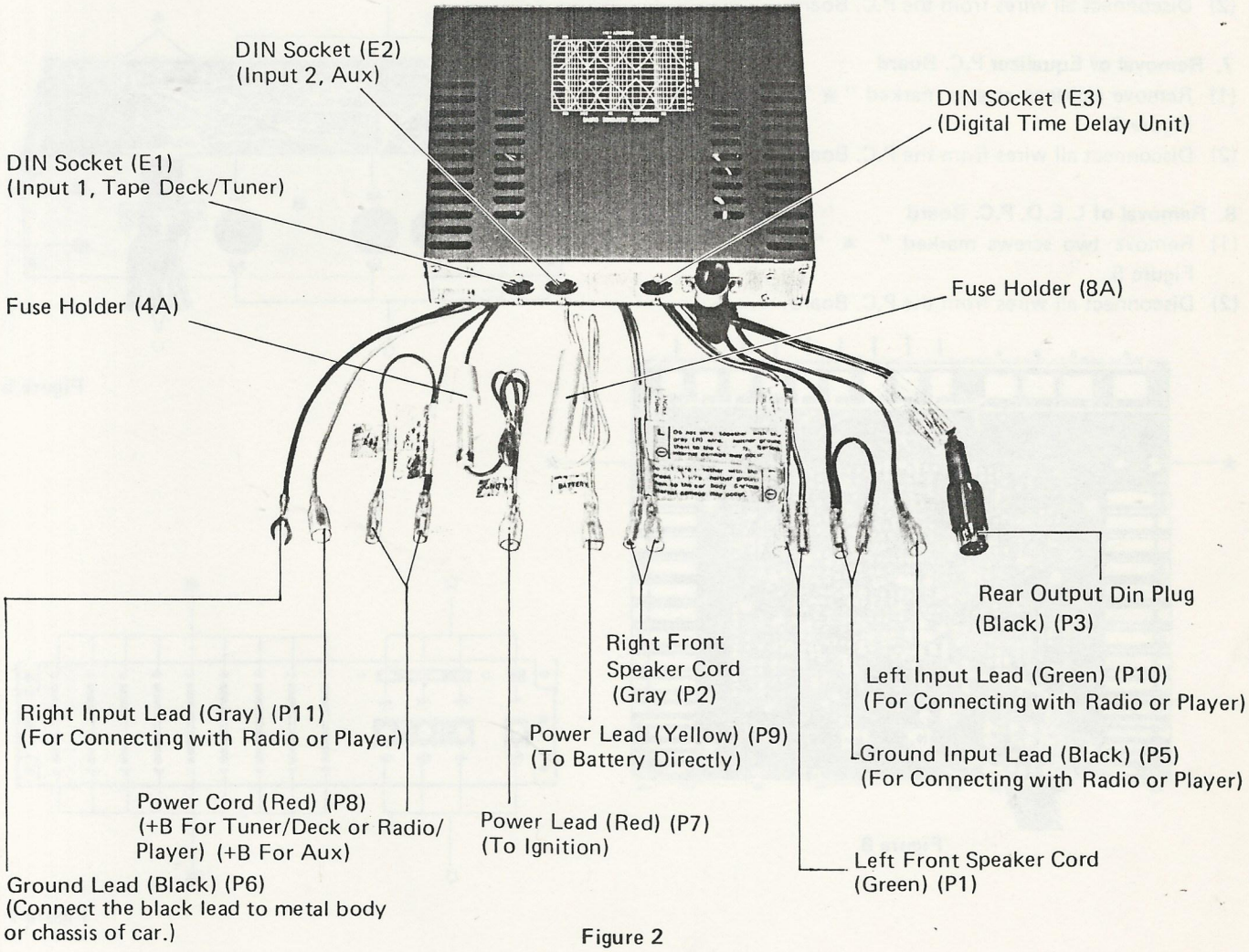

Figure 2

1. Removal of Front Bezel

(1) Pull out nine slide knobs as shown in Figure 3.

(2) Remove four screws marked " ● ", as shown in Figure 3.

2. Removal of Top Cover

(1) Remove four screws marked " ■ ", as shown in Figure 3 and 4.

3. Removal of Bottom Cover

(1) Remove four screws marked " □ " as shown in Figure 3 and 4.

4. Removal of Rear Bracket

(1) Remove sixteen screws marked " ○ ", as shown in Figure 5.

5. Removal of Side Bracket

(1) Remove four screws marked " ★ " as shown in Figure 4 and 6.

6. Removal of Switch P.C. Board

(1) Remove eight screws marked " ☆ ", as shown in Figure 7.

(2) Disconnect all wires from the P.C. Board.

7. Removal of Equalizer P.C. Board

(1) Remove eighteen screws marked " ※ ", as shown in Figure 7.

(2) Disconnect all wires from the P.C. Board.

8. Removal of L.E.D. P.C. Board

(1) Remove two screws marked " ▲ ", as shown in Figure 5.

(2) Disconnect all wires from the P.C. Board.

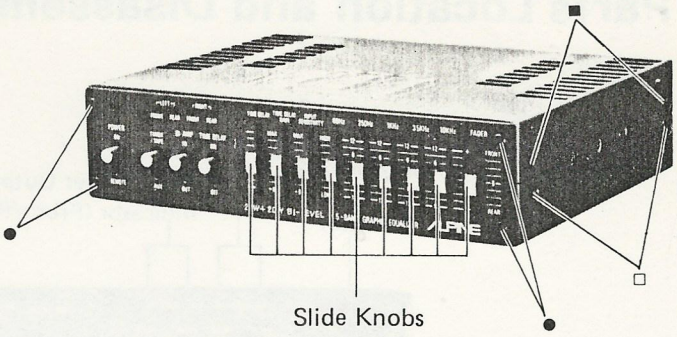

Figure 3

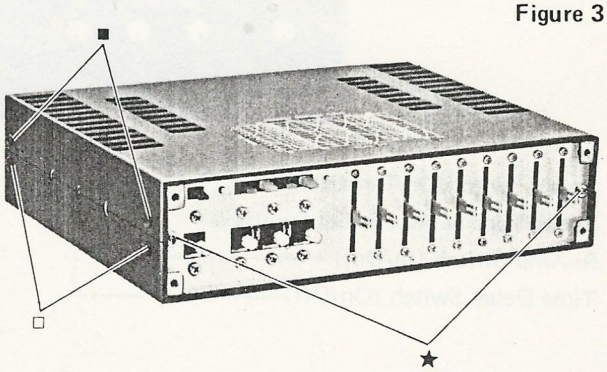

Figure 4

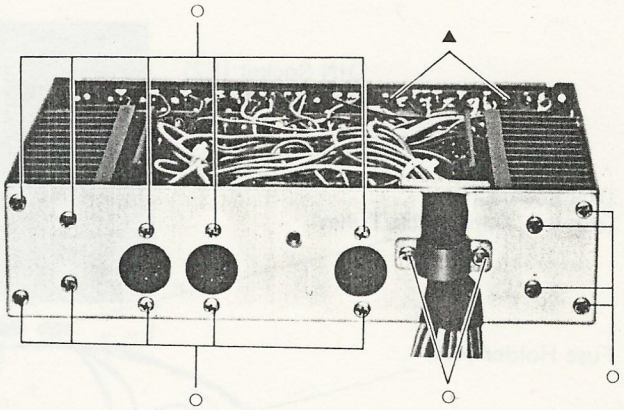

Figure 5

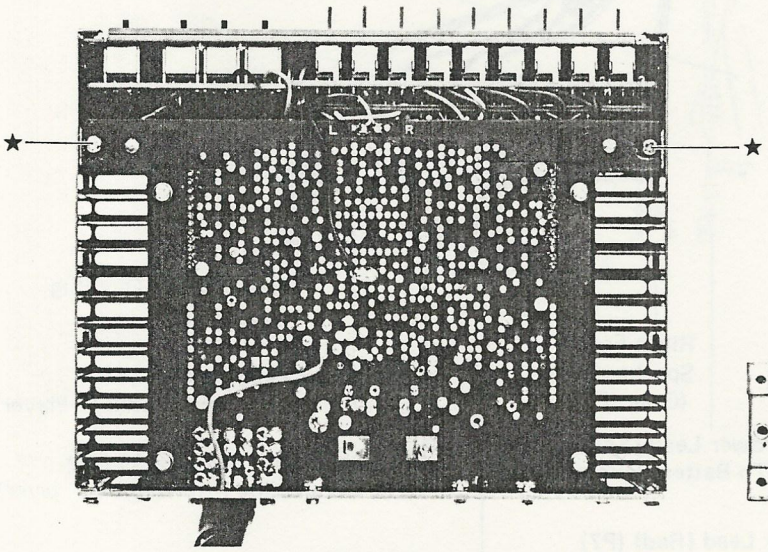

Figure 6

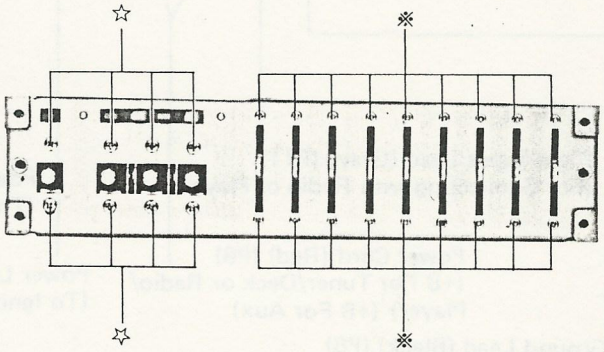

Figure 7

Trouble Shooting

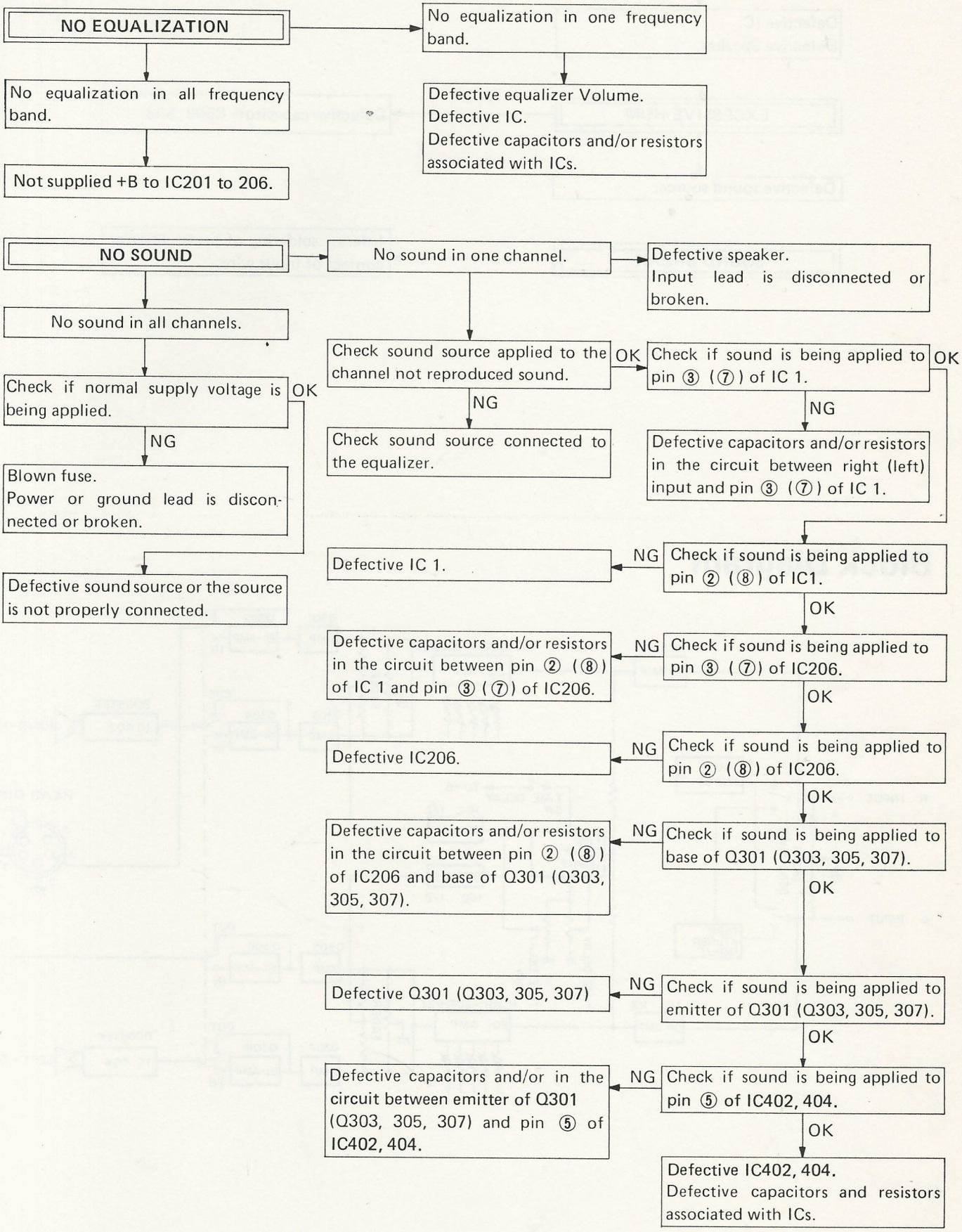

SOUND DISTORTION → Defective sound source.

↓

Defective IC.
Defective Speaker.

EXCESSIVE HUM → Defective capacitors C502, 503.

↓

Defective sound source.

SOUND BREAK → Inferior soldering of parts. Inferior contact of input wire.

Block Diagram

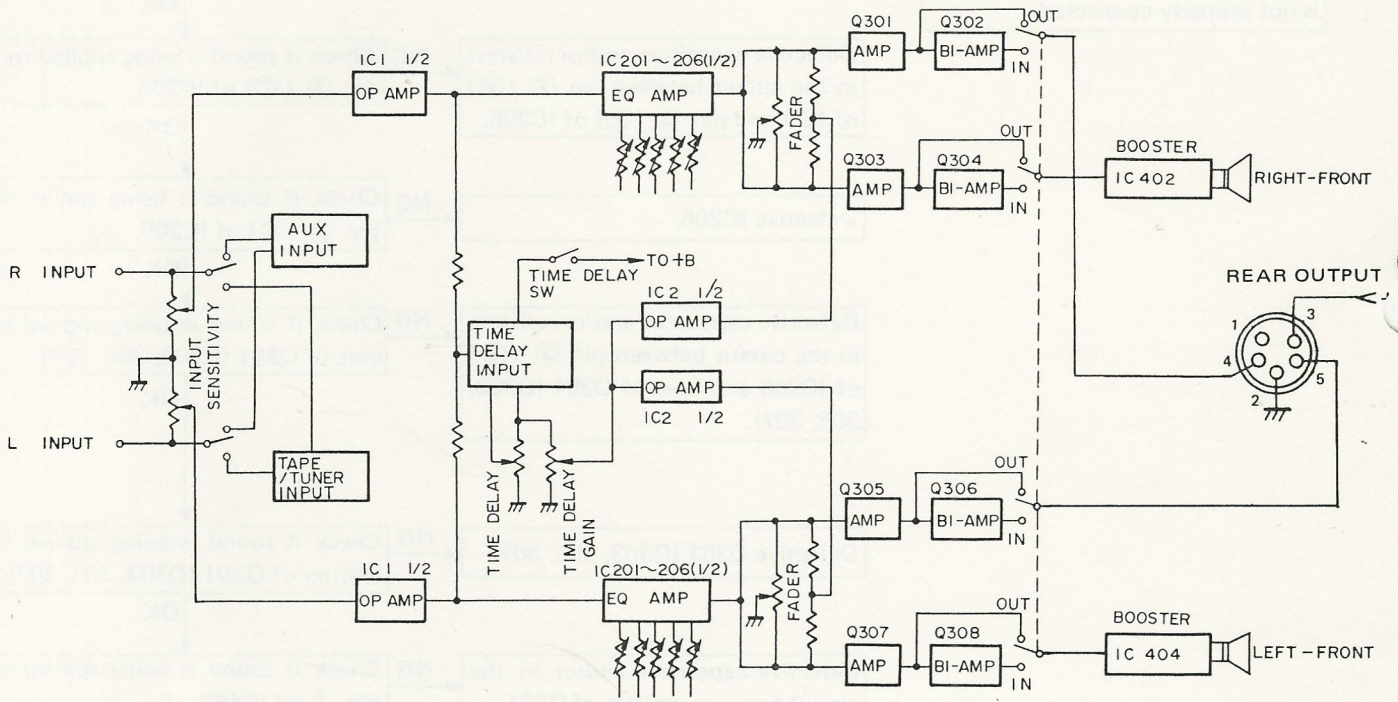

Parts Layout on P.C. Boards

Equalizer P.C.Board

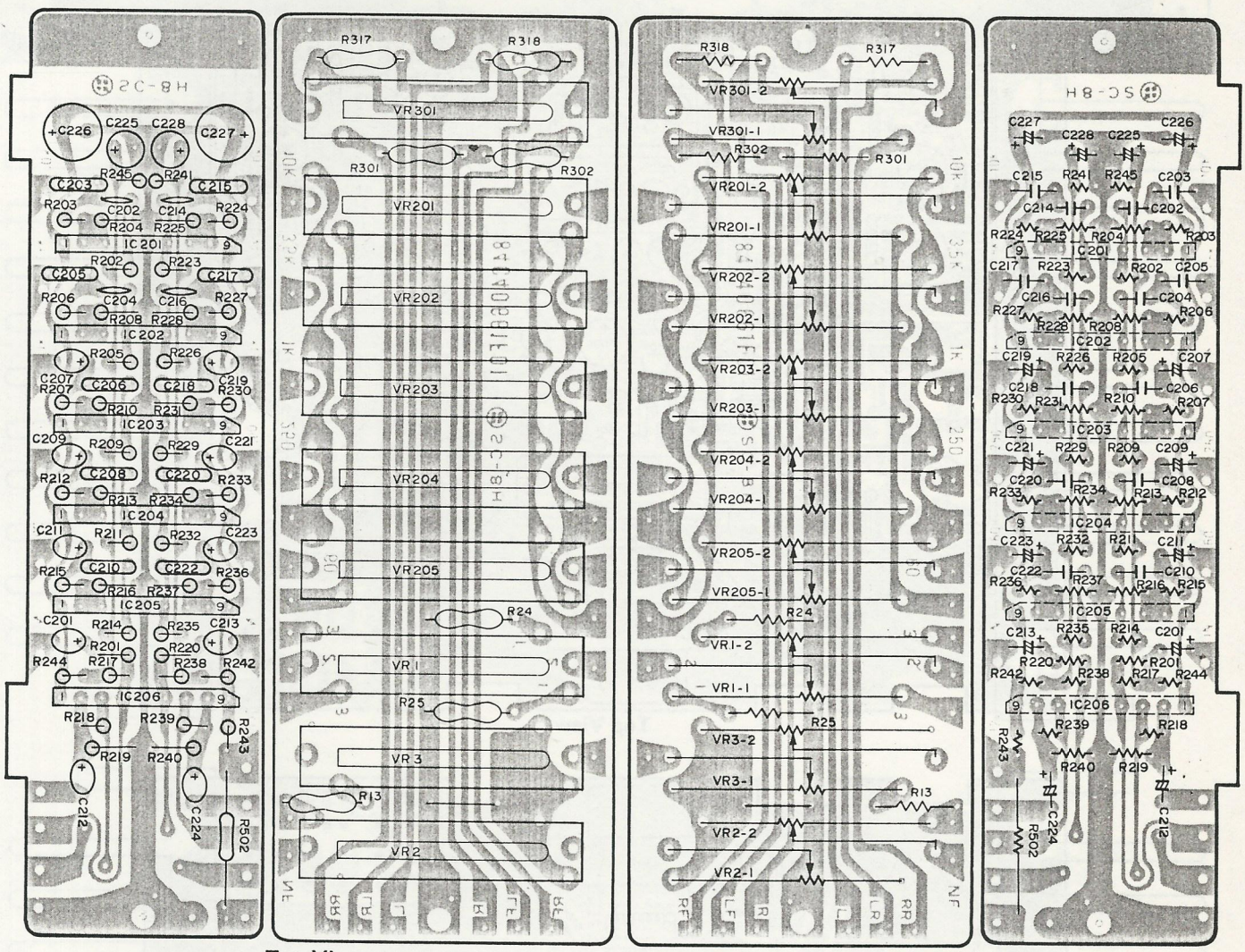

Top View

Bottom View

Switch P.C.Board

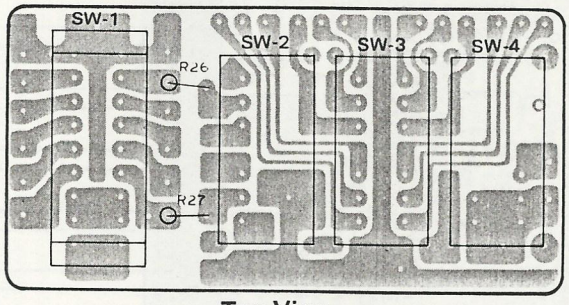

Top View

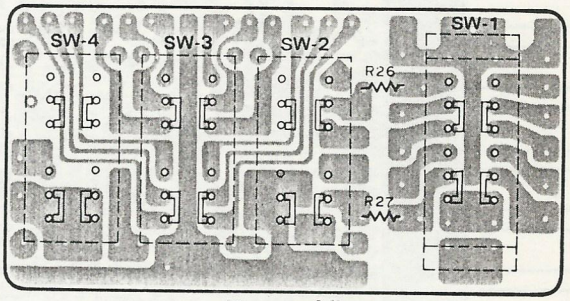

Bottom View

LED P.C.Board

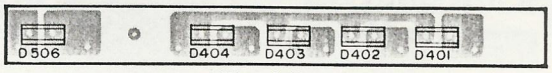

Top View

Bottom View

Main Amplifier P.C.Board

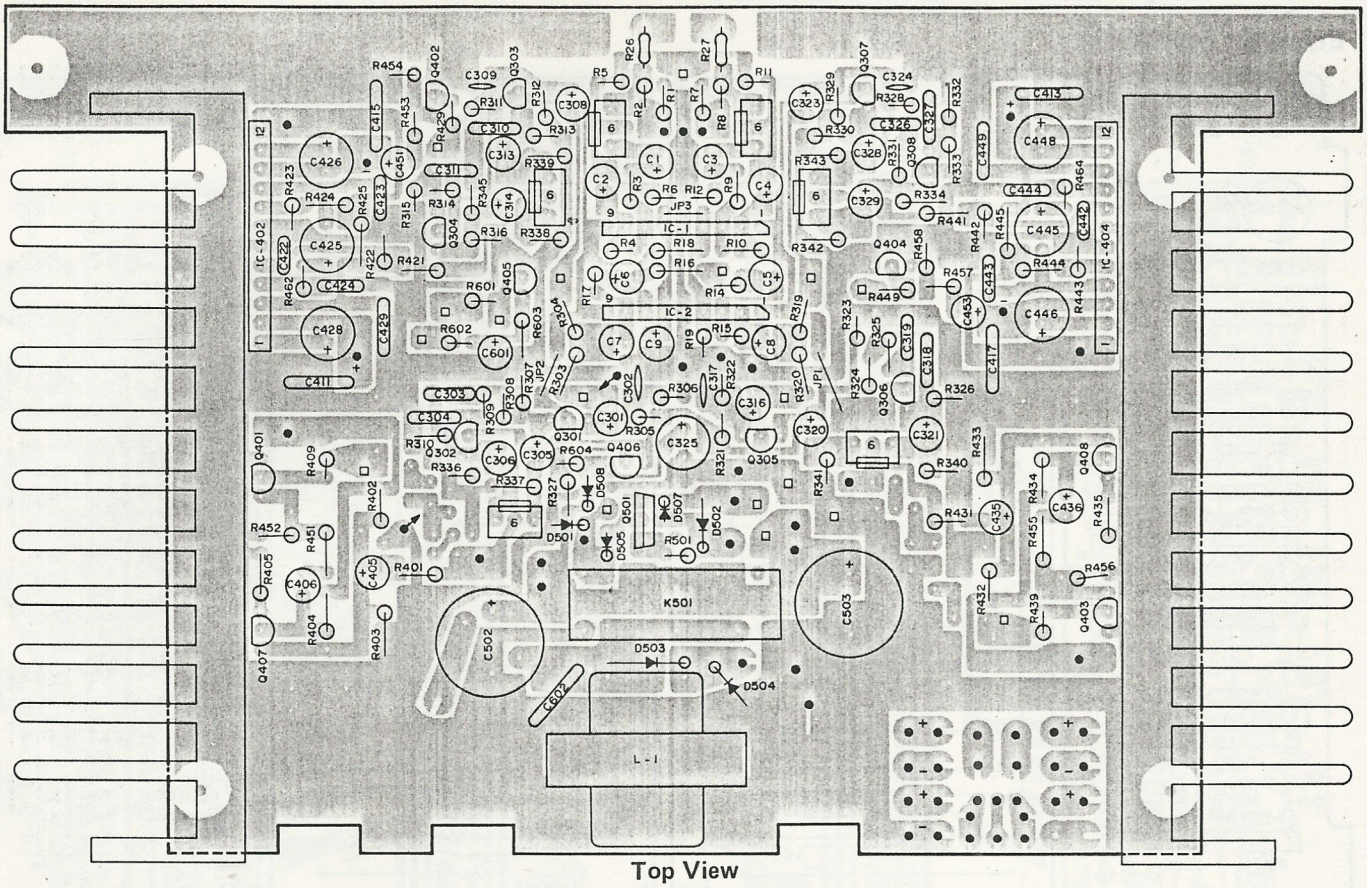

Top View

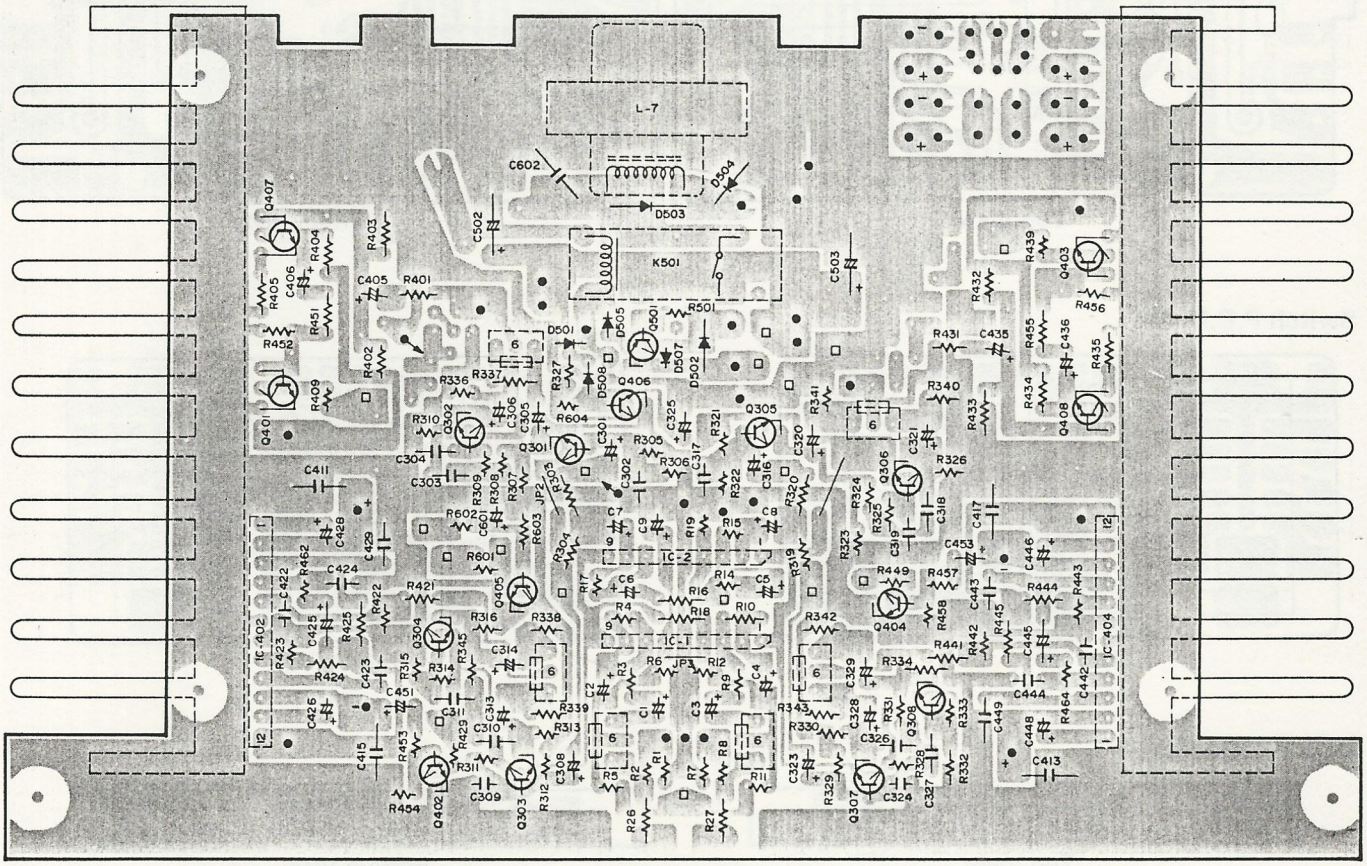

Bottom View

Wiring Diagram

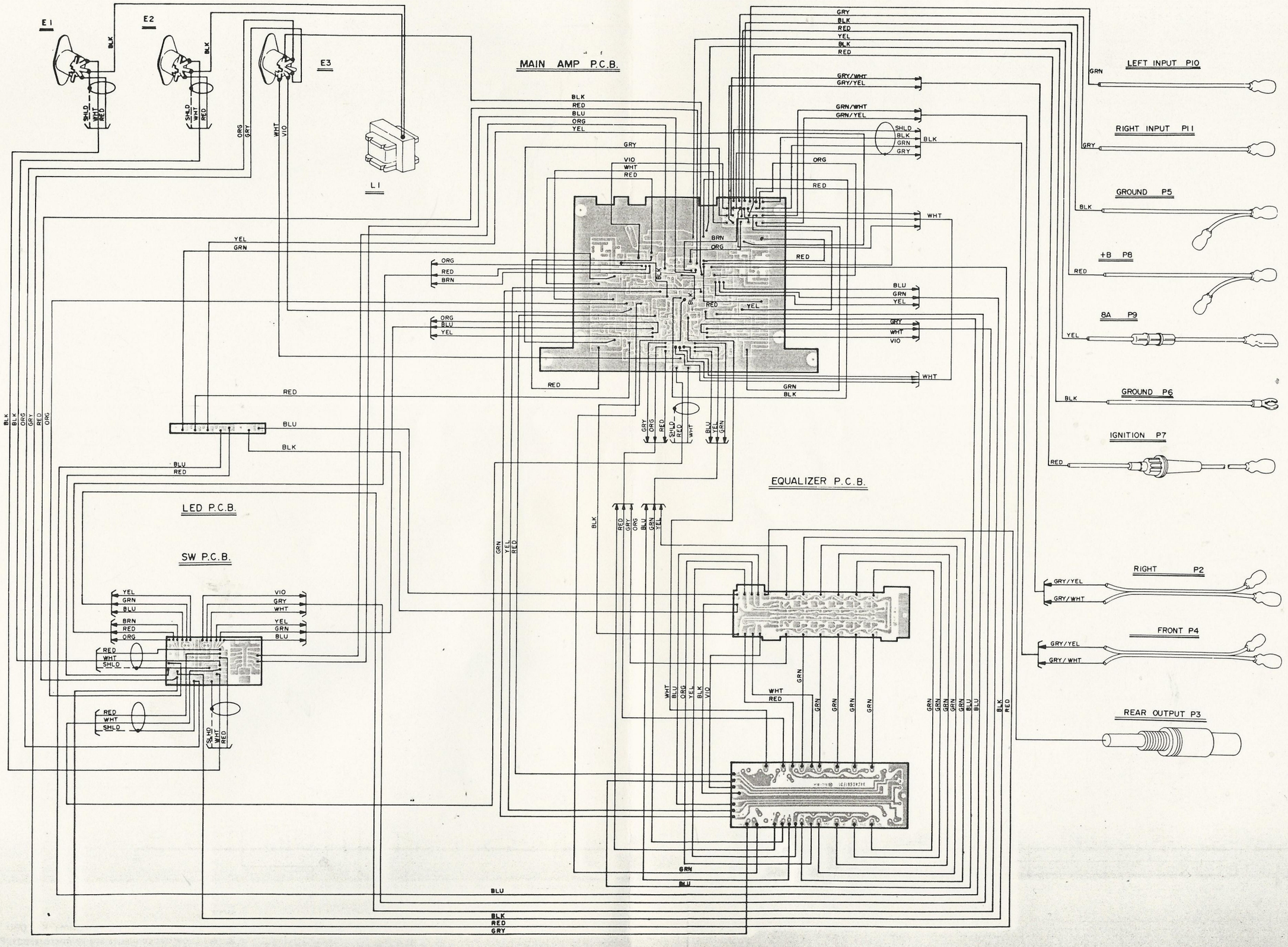

Schematic Diagram

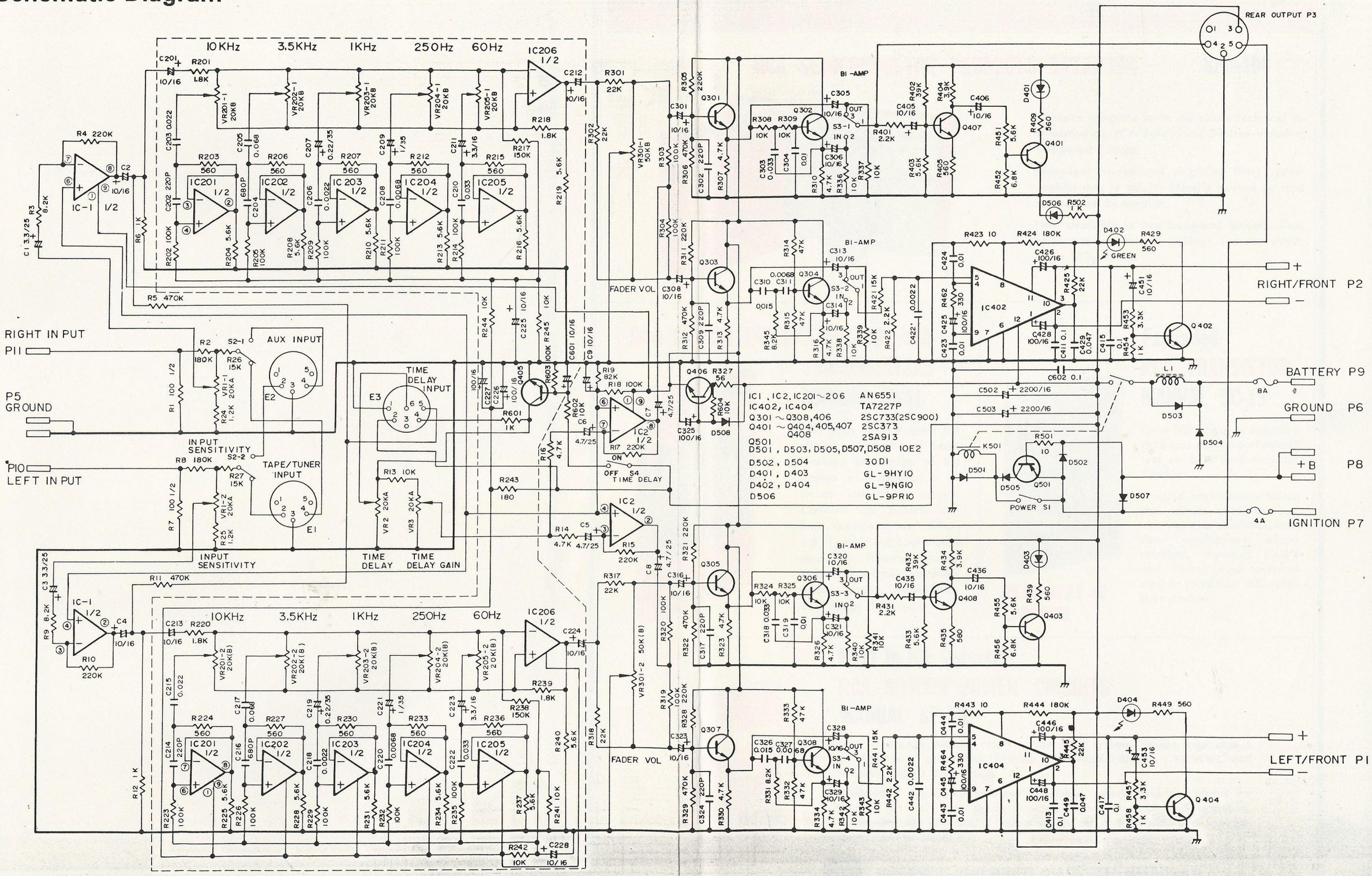

NOTES:

1. All resistance values are in ohms. K=1,000
2. All capacitance values are in microfarads. $P=\frac{1}{1,000,000}$
3. Each ⑤ pin in IC1, 2 and IC201 to 206 (AN6551) is grounded.

Exploded View

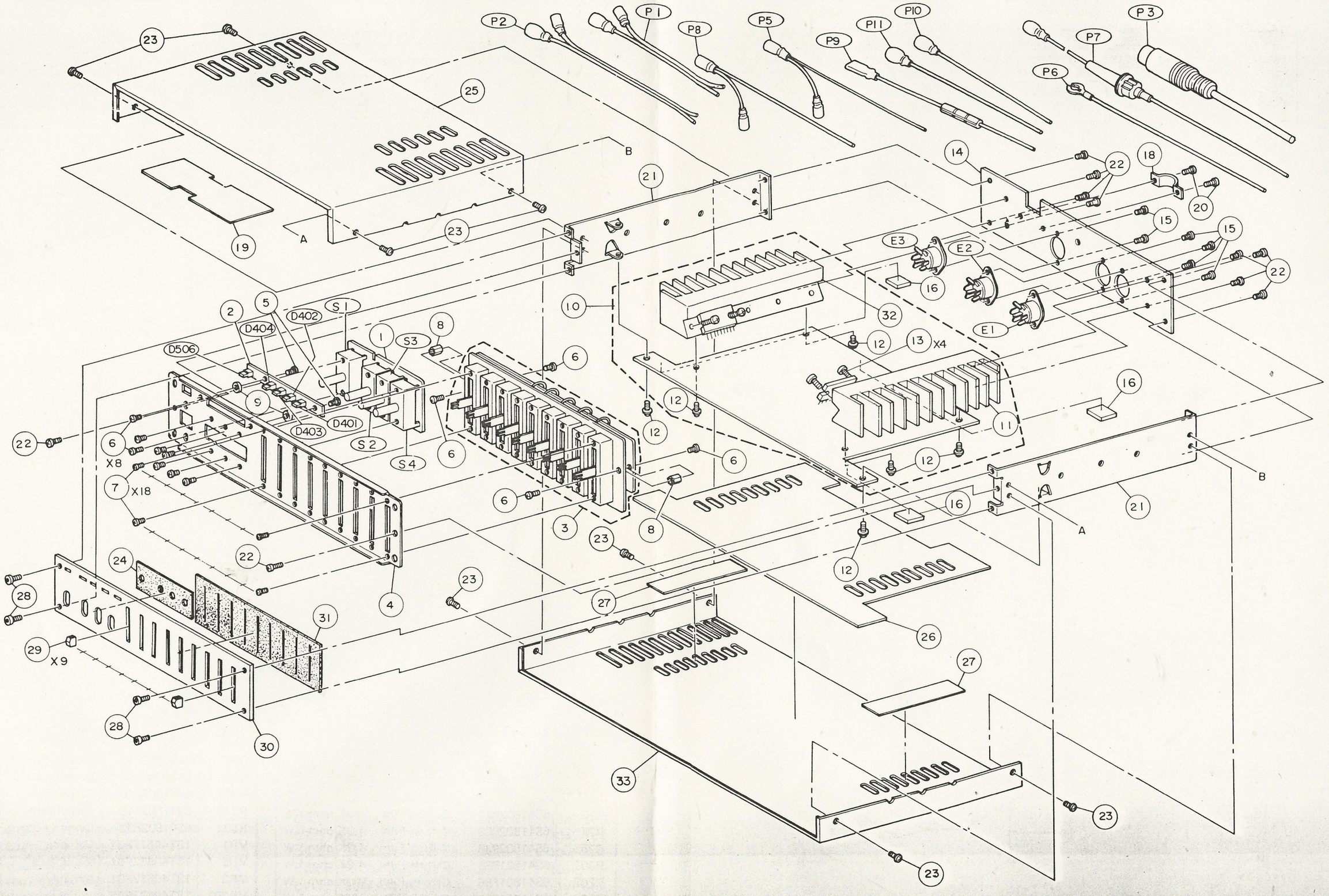

Semi-Conductor Lead Identifications

AN6551	TA7227P	2SC733 2SC373	2SC900E	2SA913
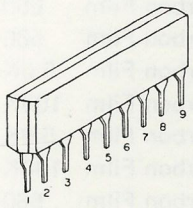	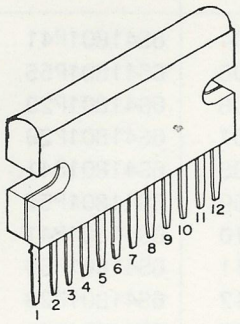	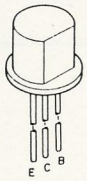	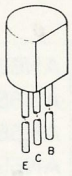	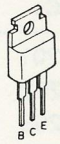

Packing Method

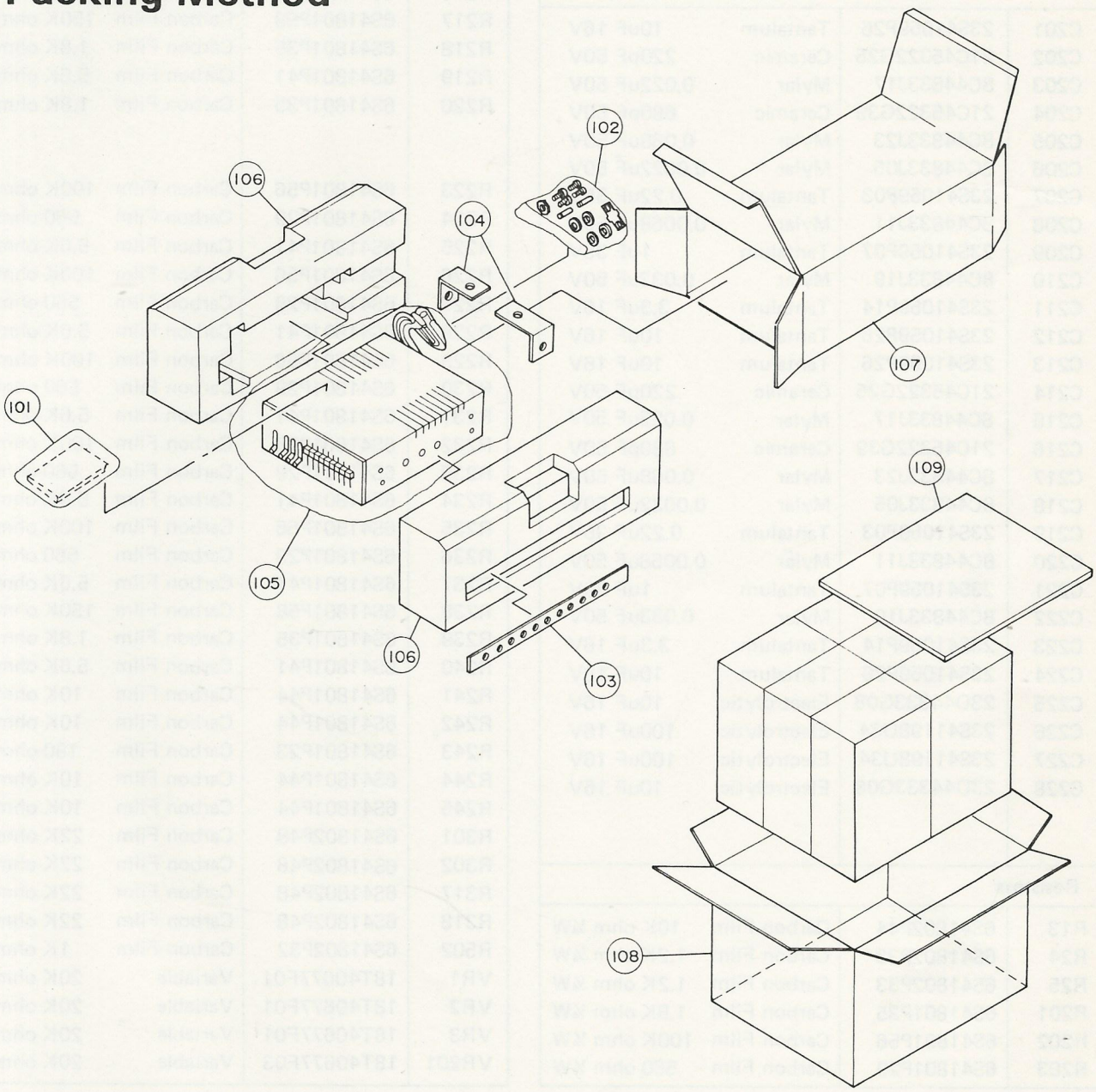

Parts List

Symbol No.	Part No.	Description	
Equalizer P.C. Board Assembly			
ICs			
IC201	51T40676F01	AN6551	
IC202	51T40676F01	AN6551	
IC203	51T40676F01	AN6551	
IC204	51T40676F01	AN6551	
IC205	51T40676F01	AN6551	
IC206	51T40676F01	AN6551	
Capacitors uF = μF (Microfarads)			
C201	23S41059P26	Tantalum	10uF 16V
C202	21C45322G25	Ceramic	220pF 50V
C203	8C44833J17	Mylar	0.022uF 50V
C204	21C45322G39	Ceramic	680pF 50V
C205	8C44833J23	Mylar	0.068uF 50V
C206	8C44833J05	Mylar	0.0022uF 50V
C207	23S41059P03	Tantalum	0.22uF 35V
C208	8C44833J11	Mylar	0.0068uF 50V
C209	23S41059P07	Tantalum	1uF 35V
C210	8C44833J19	Mylar	0.033uF 50V
C211	23S41059P14	Tantalum	3.3uF 16V
C212	23S41059P26	Tantalum	10uF 16V
C213	23S41059P26	Tantalum	10uF 16V
C214	21C45322G25	Ceramic	220pF 50V
C215	8C44833J17	Mylar	0.022uF 50V
C216	21C45322G39	Ceramic	680pF 50V
C217	8C44833J23	Mylar	0.068uF 50V
C218	8C44833J05	Mylar	0.0022uF 50V
C219	23S41059P03	Tantalum	0.22uF 35V
C220	8C44833J11	Mylar	0.0068uF 50V
C221	23S41059P07	Tantalum	1uF 35V
C222	8C44833J19	Mylar	0.033uF 50V
C223	23S41059P14	Tantalum	3.3uF 16V
C224	23S41059P26	Tantalum	10uF 16V
C225	23D44333G08	Electrolytic	10uF 16V
C226	23S41198U34	Electrolytic	100uF 16V
C227	23S41198U34	Electrolytic	100uF 16V
C228	23D44333G08	Electrolytic	10uF 16V
Resistors			
R13	6S41802P44	Carbon Film	10K ohm ¼W
R24	6S41802P33	Carbon Film	1.2K ohm ¼W
R25	6S41802P33	Carbon Film	1.2K ohm ¼W
R201	6S41801P35	Carbon Film	1.8K ohm ¼W
R202	6S41801P56	Carbon Film	100K ohm ¼W
R203	6S41801P29	Carbon Film	560 ohm ¼W

Symbol No.	Part No.	Description	
R204	6S41801P41	Carbon Film	5.6K ohm ¼W
R205	6S41801P56	Carbon Film	100K ohm ¼W
R206	6S41801P29	Carbon Film	560 ohm ¼W
R207	6S41801P29	Carbon Film	560 ohm ¼W
R208	6S41801P41	Carbon Film	5.6K ohm ¼W
R209	6S41801P56	Carbon Film	100K ohm ¼W
R210	6S41801P41	Carbon Film	5.6K ohm ¼W
R211	6S41801P56	Carbon Film	100K ohm ¼W
R212	6S41801P29	Carbon Film	560 ohm ¼W
R213	6S41801P41	Carbon Film	5.6K ohm ¼W
R214	6S41801P56	Carbon Film	100K ohm ¼W
R215	6S41801P29	Carbon Film	560 ohm ¼W
R216	6S41801P41	Carbon Film	5.6K ohm ¼W
R217	6S41801P58	Carbon Film	150K ohm ¼W
R218	6S41801P35	Carbon Film	1.8K ohm ¼W
R219	6S41801P41	Carbon Film	5.6K ohm ¼W
R220	6S41801P35	Carbon Film	1.8K ohm ¼W
R223	6S41801P56	Carbon Film	100K ohm ¼W
R224	6S41801P29	Carbon Film	560 ohm ¼W
R225	6S41801P41	Carbon Film	5.6K ohm ¼W
R226	6S41801P56	Carbon Film	100K ohm ¼W
R227	6S41801P29	Carbon Film	560 ohm ¼W
R228	6S41801P41	Carbon Film	5.6K ohm ¼W
R229	6S41801P56	Carbon Film	100K ohm ¼W
R230	6S41801P29	Carbon Film	560 ohm ¼W
R231	6S41801P41	Carbon Film	5.6K ohm ¼W
R232	6S41801P56	Carbon Film	100K ohm ¼W
R233	6S41801P29	Carbon Film	560 ohm ¼W
R234	6S41801P41	Carbon Film	5.6K ohm ¼W
R235	6S41801P56	Carbon Film	100K ohm ¼W
R236	6S41801P29	Carbon Film	560 ohm ¼W
R237	6S41801P41	Carbon Film	5.6K ohm ¼W
R238	6S41801P58	Carbon Film	150K ohm ¼W
R239	6S41801P35	Carbon Film	1.8K ohm ¼W
R240	6S41801P41	Carbon Film	5.6K ohm ¼W
R241	6S41801P44	Carbon Film	10K ohm ¼W
R242	6S41801P44	Carbon Film	10K ohm ¼W
R243	6S41801P23	Carbon Film	180 ohm ¼W
R244	6S41801P44	Carbon Film	10K ohm ¼W
R245	6S41801P44	Carbon Film	10K ohm ¼W
R301	6S41802P48	Carbon Film	22K ohm ¼W
R302	6S41802P48	Carbon Film	22K ohm ¼W
R317	6S41802P48	Carbon Film	22K ohm ¼W
R318	6S41802P48	Carbon Film	22K ohm ¼W
R502	6S41802P32	Carbon Film	1K ohm ¼W
VR1	18T40677F01	Variable	20K ohm A
VR2	18T40677F01	Variable	20K ohm A
VR3	18T40677F01	Variable	20K ohm A
VR201	18T40677F03	Variable	20K ohm B

Symbol No.	Part No.	Description	
VR202	18T40677F03	Variable	20K ohm B
VR203	18T40677F03	Variable	20K ohm B
VR204	18T40677F03	Variable	20K ohm B
VR205	18T40677F03	Variable	20K ohm B
VR301	18T40677F04	Variable	50K ohm B
Main Amplifier P.C. Board Assembly			
ICs			
IC1	51T40676F01	AN6551	
IC2	51T40676F01	AN6551	
IC402	51T42684U01	TA7227P	
IC404	51T42684U01	TA7227P	
Transistors			
Q301	48S40247G02 or	2SC733	
	48S40149P01	2SC900E	
Q302	48S40247G02 or	2SC733	
	48S40149P01	2SC900E	
Q303	48S40247G02 or	2SC733	
	48S40149P01	2SC900E	
Q304	48S40247G02 or	2SC733	
	48S40149P01	2SC900E	
Q305	48S40247G02 or	2SC733	
	48S40149P01	2SC900E	
Q306	48S40247G02 or	2SC733	
	48S40149P01	2SC900E	
Q307	48S40247G02 or	2SC733	
	48S40149P01	2SC900E	
Q308	48S40247G02 or	2SC733	
	48S40149P01	2SC900E	
Q401	48S40170G01	2SC373	
Q402	48S40170G01	2SC373	
Q403	48S40170G01	2SC373	
Q404	48S40170G01	2SC373	
Q405	48S40170G01	2SC373	
Q406	48S40247G02 or	2SC733	
	48S40149P01	2SC900E	
Q407	48S40170G01	2SC373	
Q408	48S40170G01	2SC373	
Q501	48T40682F01	2SA913	
Diodes			
D501	48C40235G02	10E2	
D502	48T40870U02	30D1	
D503	48C40235G02	10E2	
D504	48T40870U02	30D1	
D505	48C40235G02	10E2	

Symbol No.	Part No.	Description	
D507	48C40235G02	10E2	
D508	48C40235G02	10E2	
Relay & Coil			
K501	80T40681F01	Relay, 8A	
L1	25T40679F01	Coil, Choke	
Capacitors uF = μF (Microfarads)			
C1	23D44333G02	Electrolytic	3.3uF 25V
C2	23D44333G08	Electrolytic	10uF 16V
C3	23D44333G02	Electrolytic	3.3uF 25V
C4	23D44333G08	Electrolytic	10uF 16V
C5	23D44333G05	Electrolytic	4.7uF 25V
C6	23D44333G05	Electrolytic	4.7uF 25V
C7	23D44333G05	Electrolytic	4.7uF 25V
C8	23D44333G05	Electrolytic	4.7uF 25V
C9	23D44333G08	Electrolytic	10uF 16V
C301	23D44333G08	Electrolytic	10uF 16V
C302	21C45322G25	Ceramic	220pF 50V
C303	8C44833J19	Mylar	0.033uF 50V
C304	8C44833J13	Mylar	0.01uF 50V
C305	23D44333G08	Electrolytic	10uF 16V
C306	23D44333G08	Electrolytic	10uF 16V
C308	23D44333G08	Electrolytic	10uF 16V
C309	21C45322G25	Ceramic	220pF 50V
C310	8C44833J15	Mylar	0.015uF 50V
C311	8C44833J11	Mylar	0.0068uF 50V
C313	23D44333G08	Electrolytic	10uF 16V
C314	23D44333G08	Electrolytic	10uF 16V
C315			
C316	23D44333G08	Electrolytic	10uF 16V
C317	21C45322G25	Ceramic	220pF 50V
C318	8C44833J19	Mylar	0.033uF 50V
C319	8C44833J13	Mylar	0.01uF 50V
C320	23D44333G08	Electrolytic	10uF 16V
C321	23D44333G08	Electrolytic	10uF 16V
C323	23D44333G08	Electrolytic	10uF 16V
C324	21C45322G25	Ceramic	220pF 50V
C325	23S41198U34	Electrolytic	100uF 16V
C326	8C44833J15	Mylar	0.015uF 50V
C327	8C44833J11	Mylar	0.0068uF 50V
C328	23D44333G08	Electrolytic	10uF 16V
C329	23D44333G08	Electrolytic	10uF 16V
C405	23D44333G08	Electrolytic	10uF 16V
C406	23D44333G08	Electrolytic	10uF 16V
C411	8C44833J25	Mylar	0.1uF 50V

Symbol No.	Part No.	Description
C413	8C44833J25	Mylar 0.1uF 50V
C415	8C44833J25	Mylar 0.1uF 50V
C417	8C44833J25	Mylar 0.1uF 50V
C422	8C44833J05	Mylar 0.0022uF 50V
C423	8C44833J13	Mylar 0.01uF 50V
C424	8C44833J13	Mylar 0.01uF 50V
C425	23S41198U34	Electrolytic 100uF 16V
C426	23S41198U34	Electrolytic 100uF 16V
C428	23S41198U34	Electrolytic 100uF 16V
C429	8C44833J21	Mylar 0.047uF 50V
C435	23D44333G08	Electrolytic 10uF 16V
C436	23D44333G08	Electrolytic 10uF 16V
C442	8C44833J05	Mylar 0.0022uF 50V
C443	8C44833J13	Mylar 0.01uF 50V
C444	8C44833J13	Mylar 0.01uF 50V
C445	23S41198U34	Electrolytic 100uF 16V
C446	23S41198U34	Electrolytic 100uF 16V
C448	23S41198U34	Electrolytic 100uF 16V
C449	8C44833J21	Mylar 0.047uF 50V
C451	23D44333G08	Electrolytic 10uF 16V
C453	23D44333G08	Electrolytic 10uF 16V
C502	23S41198U71	Electrolytic 2200uF 16V
C503	23S41198U71	Electrolytic 2200uF 16V
C601	23D44333G08	Electrolytic 10uF 16V
C602	8C44833J25	Mylar 0.1uF 50V
Resistors		
R1	6D44744G20	Carbon Film 100 ohm ½W
R2	6S41801P59	Carbon Film 180K ohm ¼W
R3	6S41801P43	Carbon Film 8.2K ohm ¼W
R4	6S41801P60	Carbon Film 220K ohm ¼W
R5	6S41801P64	Carbon Film 470K ohm ¼W
R6	6S41801P32	Carbon Film 1K ohm ¼W
R7	6D44744G20	Carbon Film 100 ohm ½W
R8	6S41801P59	Carbon Film 180K ohm ¼W
R9	6S41801P43	Carbon Film 8.2K ohm ¼W
R10	6S41801P60	Carbon Film 220K ohm ¼W
R11	6S41801P64	Carbon Film 470K ohm ¼W
R12	6S41801P32	Carbon Film 1K ohm ¼W
R14	6S41801P40	Carbon Film 4.7K ohm ¼W
R15	6S41801P60	Carbon Film 220K ohm ¼W
R16	6S41801P40	Carbon Film 4.7K ohm ¼W
R17	6S41801P60	Carbon Film 220K ohm ¼W
R18	6S41801P56	Carbon Film 100K ohm ¼W
R19	6S41801P55	Carbon Film 82K ohm ¼W
R26	6S41042U93	Carbon Film 15K ohm 1/8W
R27	6S41042U93	Carbon Film 15K ohm 1/8W

Symbol No.	Part No.	Description
R303	6S41801P56	Carbon Film 100K ohm ¼W
R304	6S41801P56	Carbon Film 100K ohm ¼W
R305	6S41801P60	Carbon Film 220K ohm ¼W
R306	6S41801P64	Carbon Film 470K ohm ¼W
R307	6S41801P40	Carbon Film 4.7K ohm ¼W
R308	6S41801P44	Carbon Film 10K ohm ¼W
R309	6S41801P44	Carbon Film 10K ohm ¼W
R310	6S41801P40	Carbon Film 4.7K ohm ¼W
R311	6S41801P60	Carbon Film 220K ohm ¼W
R312	6S41801P64	Carbon Film 470K ohm ¼W
R313	6S41801P40	Carbon Film 4.7K ohm ¼W
R314	6S41801P52	Carbon Film 47K ohm ¼W
R315	6S41801P52	Carbon Film 47K ohm ¼W
R316	6S41801P40	Carbon Film 4.7K ohm ¼W
R319	6S41801P56	Carbon Film 100K ohm ¼W
R320	6S41801P56	Carbon Film 100K ohm ¼W
R321	6S41801P60	Carbon Film 220K ohm ¼W
R322	6S41801P64	Carbon Film 470K ohm ¼W
R323	6S41801P40	Carbon Film 4.7K ohm ¼W
R324	6S41801P44	Carbon Film 10K ohm ¼W
R325	6S41801P44	Carbon Film 10K ohm ¼W
R326	6S41801P40	Carbon Film 4.7K ohm ¼W
R327	6S41801P17	Carbon Film 56 ohm ¼W
R328	6S41801P60	Carbon Film 220K ohm ¼W
R329	6S41801P64	Carbon Film 470K ohm ¼W
R330	6S41801P40	Carbon Film 4.7K ohm ¼W
R331	6S41801P43	Carbon Film 8.2K ohm ¼W
R332	6S41801P52	Carbon Film 47K ohm ¼W
R333	6S41801P52	Carbon Film 47K ohm ¼W
R334	6S41801P40	Carbon Film 4.7K ohm ¼W
R336	6S41801P44	Carbon Film 10K ohm ¼W
R337	6S41801P44	Carbon Film 10K ohm ¼W
R338	6S41801P44	Carbon Film 10K ohm ¼W
R339	6S41801P44	Carbon Film 10K ohm ¼W
R340	6S41801P44	Carbon Film 10K ohm ¼W
R341	6S41801P44	Carbon Film 10K ohm ¼W
R342	6S41801P44	Carbon Film 10K ohm ¼W
R343	6S41801P44	Carbon Film 10K ohm ¼W
R345	6S41801P43	Carbon Film 8.2K ohm ¼W
R401	6S41801P36	Carbon Film 2.2K ohm ¼W
R402	6S41801P51	Carbon Film 39K ohm ¼W
R403	6S41801P41	Carbon Film 5.6K ohm ¼W
R404	6S41801P39	Carbon Film 3.9K ohm ¼W
R405	6S41801P29	Carbon Film 560 ohm ¼W
R409	6S41801P29	Carbon Film 560 ohm ¼W
R421	6S41801P46	Carbon Film 15K ohm ¼W
R422	6S41801P36	Carbon Film 2.2K ohm ¼W
R423	6S41801P08	Carbon Film 10 ohm ¼W
R424	6S41801P59	Carbon Film 180K ohm ¼W
R425	6S41801P48	Carbon Film 22K ohm ¼W
R429	6S41801P29	Carbon Film 560 ohm ¼W
R431	6S41801P36	Carbon Film 2.2K ohm ¼W
R432	6S41801P51	Carbon Film 39K ohm ¼W
R433	6S41801P41	Carbon Film 5.6K ohm ¼W

Symbol No.	Part No.	Description
R434	6S41801P39	Carbon Film 3.9K ohm ¼W
R435	6S41801P29	Carbon Film 560 ohm ¼W
R439	6S41801P29	Carbon Film 560 ohm ¼W
R441	6S41801P46	Carbon Film 15K ohm ¼W
R442	6S41801P36	Carbon Film 2.2K ohm ¼W
R443	6S41801P08	Carbon Film 10 ohm ¼W
R444	6S41801P59	Carbon Film 180K ohm ¼W
R445	6S41801P48	Carbon Film 22K ohm ¼W
R449	6S41801P29	Carbon Film 560 ohm ¼W
R451	6S41801P41	Carbon Film 5.6K ohm ¼W
R452	6S41801P42	Carbon Film 6.8K ohm ¼W
R453	6S41801P38	Carbon Film 3.3K ohm ¼W
R454	6S41801P32	Carbon Film 1K ohm ¼W
R455	6S41801P41	Carbon Film 5.6K ohm ¼W
R456	6S41801P42	Carbon Film 6.8K ohm ¼W
R457	6S41801P38	Carbon Film 3.3K ohm ¼W
R458	6S41801P32	Carbon Film 1K ohm ¼W
R462	6S41802P26	Carbon Film 330 ohm ¼W
R464	6S41802P26	Carbon Film 330 ohm ¼W
R501	6S41801P08	Carbon Film 10 ohm ¼W
R601	6S41801P32	Carbon Film 1K ohm ¼W
R602	6S41801P44	Carbon Film 10K ohm ¼W
R603	6S41801P56	Carbon Film 100K ohm ¼W
R604	6S41801P44	Carbon Film 10K ohm ¼W

Miscellaneous Parts

S1	40T40685F01	Switch, Lever
S2	40T40685F01	Switch, Lever
S3	40T40685F01	Switch, Lever
S4	40T40685F01	Switch, Lever
D401	48T42247U02	L.E.D.
D402	48T42247U01	L.E.D.
D403	48T42247U02	L.E.D.
D404	48T42247U01	L.E.D.
D506	48T42247U03	L.E.D. (Red)
E1	9T40678F01	Socket, DIN
E2	9T40678F01	Socket, DIN
E3	9T40678F02	Socket, DIN
P1	30T40818F01	Assembly, Speaker Cord (Left/Front)
P2	30T40817F01	Assembly, Speaker Cord (Right/Front)
P3	30T40714F01	Plug, DIN (Rear Speaker)
P5	30T40816F01	Assembly, Ground Wire In
P6	30T40813F01	Assembly, Ground Wire
P7	30T40706F01	Receptacle, Fuse Wire
P8	30T40707F01	Cord, Power
P9	30T40708F01	Cord, Battery

Symbol No.	Part No.	Description
P10	30T40815F01	Assembly, Left Connecting Wire
P11	30T40814F01	Assembly, Right Connecting Wire

General Assembly Parts

1	84B40662F01	Panel, Switch
2	84A40663F01	Panel, L.E.D.
3	1V41500F79	Assembly, Equalizer Panel
4	7B40172F01	Bracket, Front
5	3C40014G15	Screw, Machine (M2x8)
6	3C40014G12	Screw, Machine (M2.6x4)
7	3C40014G07	Screw, Machine (M2x4)
8	46A40637F01	Stud, Shoulder
9	43A41837U01	Spacer, Switch
10	1V42200F83	Assembly, Main Amplifier Panel
11	7B40175F01	Heat Sink
12	3C40121T02	Screw, Machine (M3x6)
13	3S40011G15	Screw, Machine (M3x10)
14	7B40173F01	Bracket, Rear
15	3C40014G11	Screw, Machine (M2.5x5)
16	75A40620U03	Pad, Rubber
17		– Not Used –
18	7A40176F01	Bracket, Cord
19	14B43672U01	Insulator Fiber
20	3C40014G10	Screw, Machine (M3x8)
21	7B40171F01	Bracket, Side
22	3C40014G09	Screw, Machine (M3x5)
23	3S40011G91	Screw, Machine (M2.6x5)
24	14A41589F01	Cover, Dust
25	15C40179F01	Cover, Top
26	14B40178F01	Insulator, Bottom
27	14A40709F01	Cover, Dust
28	3B40942T01	Screw, Hex. Socket (M3x6)
29	36A40180F01	Knob, Slide
30	13B42607F01	Bezel, Front
31	14A40635F01	Cover, Dust (A)
32	7B40175F02	Heat Sink
33	15C40179F03	Cover, Bottom

Symbol No.	Part No.	Description
Packing Assembly Parts		
101	1V42300F22	Assembly, Pamphlet
101-1	68P40880F69	Owner's Manual
101-2	56B40230G12	Sack, Polyethylene
101-3	68P44370P26	Card, Warranty
101-4	54A44217U02	Card, Consumer
101-5	54A40001F01	Card, S. Station List
102	1V40500F31	Assembly, Kit
102-1	3A43315G01	Screw, Machine (M4x10)
102-2	4S40072G08	Washer, Tooth Lock
102-3	4S40072G11	Washer, Tooth Lock
102-4	3S40012G39	Screw, Tapping (M5x20)
102-5	3S40012G45	Screw, Tapping (M5x10)
102-6	2S40000G33	Nut, Hex (M5)
102-7	45A41684U01	Arm, Adaptor
102-8	65A40348G14	Fuse (8A)
102-9	56B40230G27	Sack, Polyethylene
102-10	3A43315G08	Screw, Machine (M5x20)
102-11	65A40348G12	Fuse (4 A)
103	42B40994G05	Strap, Reciver Mounting
104	7B40725F01	Bracket, Mounting
105	56B40230G22	Sack, Polyethylene
106	56C40710F01	Tray, Packing
107	56C42621F01	Carton, Packing (Individual)
108	56C40826F05	Carton, Packing (Master)
109	56C40826F01	Carton, Packing

ALPINE ELECTRONICS INC.
Tokyo Office: 1-7 Yukigaya Otsuka-cho,
Ota-ku, Tokyo, Japan
Phone 03-727-5311 Telex 246-6076

ALPINE ELECTRONICS OF AMERICA, INC.
3102 Kashiwa Street, Torrance,
California 90505
Phone 213-326-8000 Telex 230-181890

ALPINE ELECTRONICS OF CANADA, INC.
101 Amber Street units 18-20 Markham,
Ontalio L3R 3B2
Canada Phone 416-495-7280 Telex 06986789

ALPINE ELECTRONICS GmbH
Münsterstr. 330 D-4000 Düsseldorf
F.R. Germany
Tel. 0211-626806 Telex 8588 296 ALPI D

69P40330F56-A

6/80
Printed in Japan