PARTS LIST

Description	Code No.
MECHANISM	
Running wheel	49.927.56
78 r.p.m. Intermediate wheel	49.927.54
33⅓ r.p.m. Intermediate wheel	49.927.55
Driving roller (on rotor spindle)	49.935.25
Locking screw for driving roller	49.935.26
Adjusting screw for intermediate wheels, 2X	49.935.36
Locking nut for intermediate wheels, 2X	49.935.37
Speed changing bracket spring	49.935.42
Speed changing bracket with speed changing arm	49.927.53
Locking ring for speed changing bracket	07.892.01
Rubber driving band	49.935.43
Motor mounting plate	49.927.52
MOTOR	
Rotor assembly	49.927.31
Upper bearing (complete)	49.927.04
Lower bearing (complete)	49.927.05
Stator (coil and laminations)	49.927.02
Steel ball (rotor thrust, in lower bearing)	89.205.02
SWITCH	
Switch assembly (complete)	A3.186.47
Contact spring (outer)	A9.864.04
Contact spring (inner, with lip)	A9.864.05

Description	Code No.
PICK-UP	
Pick-up arm	A9.864.29
Pick-up flex (complete)	49.944.70
Screw for fixing flex to crystal cartridge	07.333.01
Cartridge fixing parts (refer Fig. 1)	
Brass outer cover, item 1	49.947.96
Inner bush, item 2	49.947.39
Screw, item 3	49.947.41
Spring, item 4	49.947.40
Rubber ring, item 5	49.947.26
Disc, item 6	49.947.38
Leaf spring inside switch spindle for retaining P/U arm	49.936.08
Screw for retaining and adjusting leaf spring above, 2X	49.936.09
SPRING SUSPENSION	
Rubber grommet, 3X	49.936.00
Spring, 3X	49.935.30
Fibre washer, 3X	49.936.01
Dished retaining washer nut, 3X	49.935.31
UNIT MOUNTING	
Bracket (fixed to motor board), 3X	49.935.78
Grommet, 3X	A3.642.01
MISCELLANEOUS	
Turntable	A9.864.28
Turntable spindle	49.935.16
Switch adjusting knob	23.690.85
Moulded cover for mechanism	49.927.57

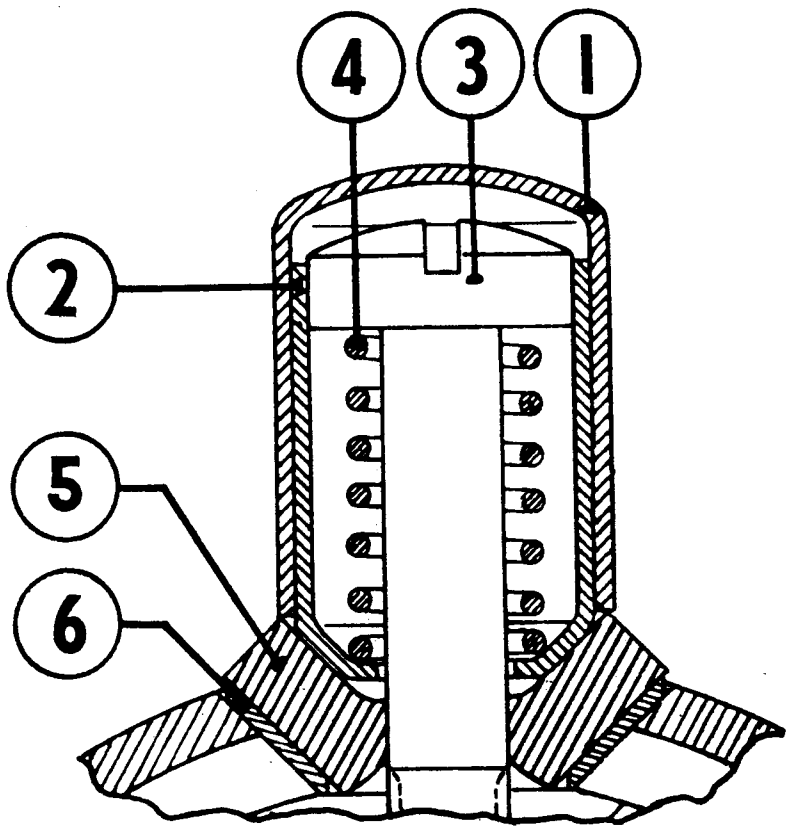

FIG. 1.