THE CHANGER MECHANISM.

The changer mechanism is divided into three main functions:

(a) The starting mechanism.
(b) The pick-up control mechanism.
(c) The record selecting mechanism.

Each function will be discussed in turn.

(a) The Starting Mechanism.

Refer to Fig. 3.

When the starting lever of the switch is put into the "start" position and released, the contact, described under (a) of "The Starting Switch," is made and the motor starts to run. Wheel 1 commences to turn in the direction indicated. When the starting lever is pulled forward it also moves the spring 2 in the direction indicated; this in turn positions the lever 3 such that its end forms a tooth for the changer driving wheel 4 and thus enables it to mesh with wheel 1.

The wheel 4 commences to rotate and lever 3 falls back into its original position. This wheel drives all the changer mechanism during the period of one rotation, and when this is complete it stops rotating because of the missing teeth. **Lever 3 will not operate and will be damaged if the unit is operated on its side.**

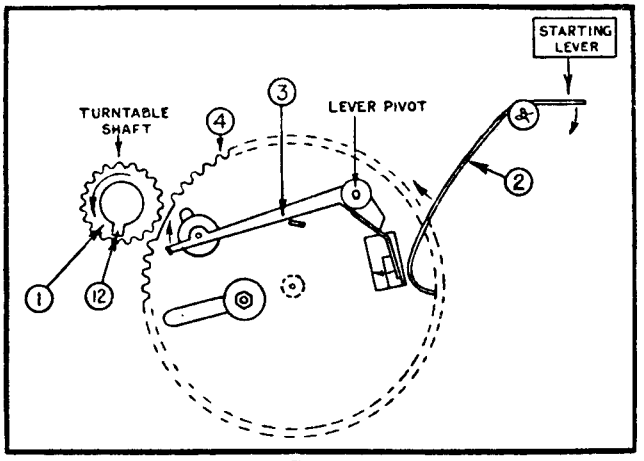

Fig. 3

(b) The Pick-up Control Mechanism.

Refer to Figs. 4, 5, 6 and 7.

The first function of the changer driving wheel is to raise the pick-up arm from its rest.

As wheel 4 rotates, stud 5 moving around with it allows plate 6 to follow it under the influence of spring 7. The follower plate 6 is bolted to a second plate 8, which also slides in the direction indicated, and causes the pick-up shaft to be pushed up, thus raising the pick-up from its rest. A study of Fig. 4 will make this action easier to follow.

The above operation is completed in a quarter revolution of the wheel 4. The pick-up is held in the raised position until stud 5 comes around and pushes plate 6 back to its working position, thus lowering the pick-up on to the record. At this point wheel 4 ceases to operate. Whilst the pick-up was held in the raised position, the next record was dropped from the stack as described under "The Record Selecting Mechanism."

In order that the pick-up be raised at the completion of a record, wheel 4 must be again rotated. The mechanism which controls this is shown in Fig. 5. As the pick-up moves across the record, plate 9 moves around with it. This plate carries the small arm 10, which moves in the direction of the arrow, and pushes the lever 3 across the wheel 4. As the pick-up arm nears the end of a record, the fibre disc 11 (carried on lever 3) approaches the shaft of wheel 1 and eventually is knocked back by the metal piece 12 attached to the shaft of wheel 1. The "knocking off" action continues with each revolution of wheel 1 until such time as the pick-up runs into the "run off" groove of the record and gives a sudden movement to lever 3, which causes its tip to move over to form a tooth for wheel 4 and thus start it rotating.

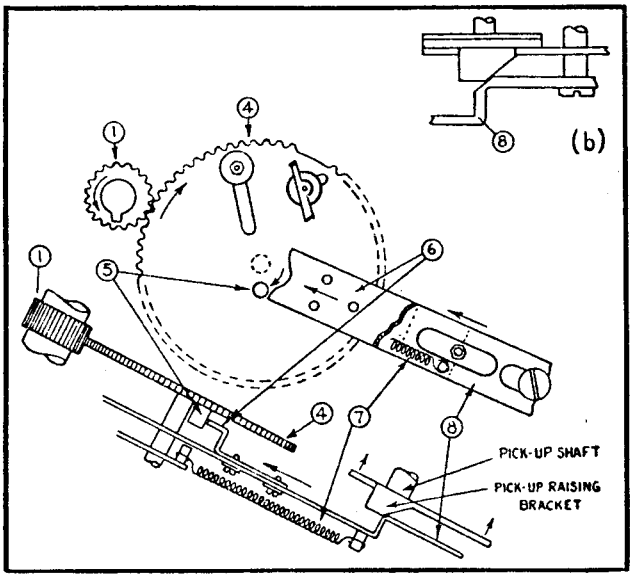

Fig. 4

The pick-up arm is thus raised as described earlier. This takes up a quarter of a revolution of the driving wheel 4.

At this point the cam 13 (Fig. 6) makes contact with the arm 14 and is pushed in the direction of the arrow, and carries the pick-up across towards the rest. The next record in the stack is dropped (see under "The Record Selecting Mechanism") and in the case of it being a 10 in. record, cam 13 continues to move around with the wheel 4 until it makes contact with the arm 15 (Fig. 7), which it pushes in the direction of the arrow, to such a distance as to poise the pick-up ready for lowering on to the starting groove of the 10 in. record. The pick-up is then lowered on to the record as described earlier. The cam 13 continues to move around and makes contact with the spring-loaded lever 16. The action here is that movement of lever 16 imparts a pressure to the pick-up arm, which causes the needle to run into the starting groove of the record. Once the needle is in the groove, the light spring loading of lever 16 causes it to ride over cam 13. The sequence for the playing of 10 in. records is thus complete.

The operation for a 12 in. record is the same as that for a 10 in. record, except that as the record falls, it knocks back the pointed arm (situated on top of the motor board). This causes a stop (dotted in Fig. 7) to position itself in the way of plate 9 such that the cam 13 can only push lever 15 to the correct distance to cause the pick-up to be lowered on to the edge of a 12 in. record. The cam 13 then rides up the edge of lever 15, and moves down the slot of wheel 4 toward the centre. It is brought out again later by the segment

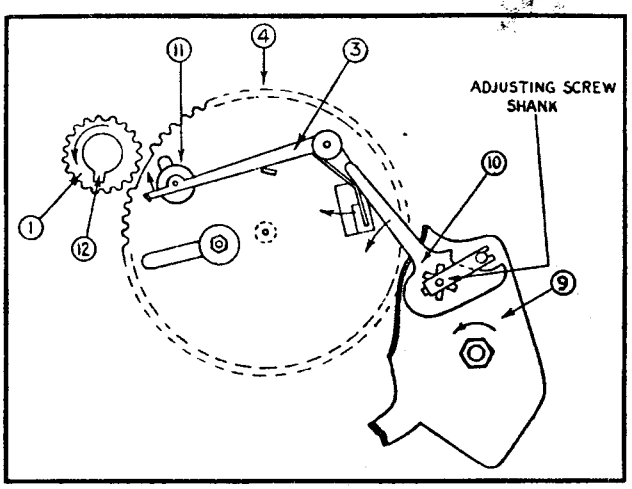

Fig. 5