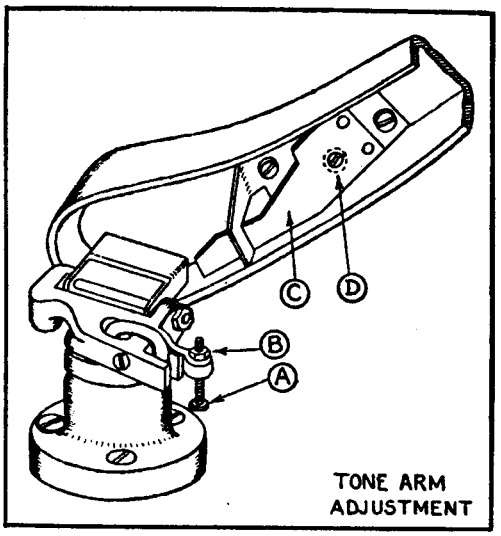

Fig. 9

LUBRICATION.

The unit is well lubricated during factory assembly and should not require very frequent attention in this regard. An occasional application of two or three drops of oil down the hollow central shaft should suffice for normal lubrication.

When lubricants are used, they should be light and of good quality, and should be used sparingly. It is necessary that rubber parts be kept free of oil.

ADJUSTMENTS AND REPAIRS

The following adjustments may be necessary due to normal "wear and tear," or due to working in an excessively warm or humid atmosphere.

Pick-up Drops Out of Place.

NOTE: Do NOT shift the pick-up on its shaft until the cause of the trouble has been determined.

(a) This fault will probably be due to the sliding cam 13 (Fig. 7) being too loose, in which case it will ride up the arm 15 instead of moving it. The threaded spindle of the slider should be held with a screwdriver whilst the lock nut is slackened. The lower disc of the slider should then be screwed up and the locknut tightened again. Care should be taken to see that the slider is not too tight since it will not then slide up arm 15 when the mechanism is set for 12 in. record playing. If the slider is satisfactorily performing its function, check the following points.

(b) The pick-up arm pivot bracket may be loose on its tubular vertical shaft — refer to "Tone Arm Setting" for adjustment.

(c) The pick-up arm may be loosely mounted in its pivot bracket. The pivot bracket screws should be adjusted.

(d) The rivetting of the tubular vertical shaft of the pick-up arm to plate 9 (Fig. 5) may be faulty. This could be rectified by soldering.

(e) For a 12 in. record the fault may be due to faulty setting of the pivot bracket on its shaft—refer to "Tone Arm Setting."

(f) For a 10 in. record the fault may be due to faulty adjustment of the adjusting screw in the supporting pillar of starting lever 2 (Fig. 3)—refer to "Tone Arm Setting."

"Knock" Audible in Speaker.

An excessive "knock," once per revolution of the turntable, which may be noticed when quiet records are being played, is due to excessive friction on the pivot of arm 10 (Fig. 5). The knocking sound emanates from the metal piece 12 hitting the fibre disc 11, which if the arm 10 is too stiff, offers more resistance than it should. The adjusting screw, which is accessible through a hole in the motor board when the pick-up arm is right back in the rest position, should be slackened slightly.

If the screw is slackened too much however, the arm 10 will be unable to push arm 3 across with the result that the pick-up will not lift at the end of a record.

Grating or Chattering Noise When Record is Being Played.

This is due to a faulty setting of the cam locking bracket 6 (Fig. 4) so that stud 5 on driving wheel 4 is in a wrong position, causing teeth on wheel 4 to chatter with teeth on turntable shaft cog 1. Refer to "Driving Wheel Setting" for adjustment.

Pick-up Lifts Before Completion of Record.

Arm 10 (Fig. 5) too stiff on its friction pivot — refer to "Knock Audible in Speaker."

Pick-up Will Not Lift at End of Record.

(a) Arm 10 (Fig. 5) is too slack on its friction pivot — refer to "Knock Audible in Speaker."

(b) Arm 10 (Fig. 5) may be bent in a downward direction, thus missing arm 3.

(c) Arm 3 (Fig. 5) may be bent and thus hindering freedom of movement.

Pick-up Drops on to Record, but does not feed into Starting Groove.

(a) This is due to maladjustment of the spring on the steering arm 16 (Fig. 7). There should be no "backlash" on arm 16 when in its "at rest" position. Backlash will be present if the two ends of the spring are not in continuous contact with their stop, thus allowing slider 13 to brush the arm aside instead of gently pushing it, and hence arm 15 and the pick-up, into the starting groove of the record.

The spring should therefore be adjusted accordingly, care being taken to see that the two faces X and Y (Fig. 7-a) are parallel.

(b) This fault can also be caused by the pick-up lead. If the lead has excessive slack between the pick-up arm and the hole in the motor board through which it passes, the lead, instead of the steering arm 16 (Fig. 7), can, under certain circumstances, take control. The lead should pass straight from the pick-up arm through the motor board without loop.

(c) Steering arm 16 (Fig. 7) may be bent, thus not contacting with slider 13.

Motor Starts, but Pick-up will not lift from the Rest.

(a) This may be caused by the spring 2 (Fig. 3) being jammed over the top of lever 3, and this can happen only if lever 3 is bent. Bending of lever 3 is possible if the turntable is rotated by hand in the wrong direction whilst the mechanism is in gear. The spring 2 may also in these circumstances become deformed. The lever 3 and spring 2 should be adjusted correctly.

(b) This fault may also be caused by the wheel 4 (Fig. 3) failing to stop in its correct position so that the tip of lever 3 is unable to make contact with the metal piece 12. This can only happen if the bracket 6 (Fig. 4) has been moved —refer "Driving Wheel Setting." Reference should also be made to "Overarm Adjustment."

(c) It should not be overlooked to pull the starting lever to "start" a second time if the changing mechanism does not commence operating.

Turntable Speed Incorrect or Varying.

Fig. 1 gives details of turntable speed adjustments.

Irregular speed or "wowing" may be caused by:—