RADIO 22RR415

SERVICE MANUAL

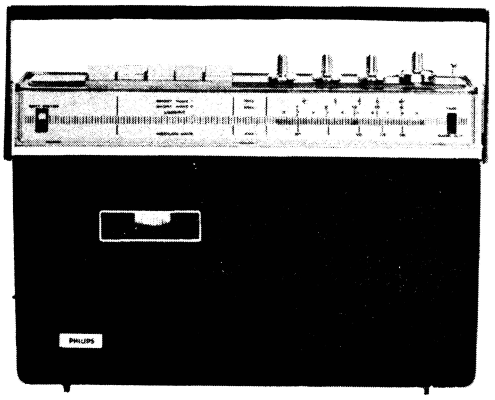

Specification: radio

Mains voltage	240 V
Battery voltage	6 V
Output power	800 mW
Loudspeaker impedance	8 Ω
Consumption (without input signal)	30 mA
IF-AM	452 kHz
Dimensions	335x215x85 mm

Specification: recorder

Tape speed	4.75 m/sec.
Tape width	3.8 mm
Track width	1.5 mm
Consumption:	
recording	160 mA
playback	130 mA
Winding/rewinding	100 mA
Frequency of bias oscillator	40 kHz

Connection facilities

External supply	240 V 50 Hz
Auxiliary input	5-pole-180°
Microphone / Earphone	plug 3.5 ø
Remote control	plug 2.5 ø

Wave ranges

MW	: 515 - 1620	kHz	(582.5 - 185.2 m)
SW1	: 2.1 - 6.6	MHz	(142.5 - 45.5 m)
SW2	: 7 - 18	MHz	(43 - 16.6 m)

Transistors

TS1 – BF185	(2SC829B-B)
TS2 – AF116N	(2SA101X)
TS3 – AF116N	(2SA101Y)
TS4 – BF185	(2SC829B-B)
TS5 – AC125	(2SB173C)
TS6 – AC126	(2SB175B)
TS7 – AC126	(2SB175B)
TS8 – AC126	(2SB175B)
TS9 – AC126	(2SB175B)
TS10 – AC126	(2SB175B)
TS11 – AC128	(2SB324N)
TS12 – AC128	(2SB324N)
TS13 – AC128	(2SB324N)
TS14 – BC108	(2SC828)
TS15 – AC128	(2SB324N)

Diodes

D101 – BA100	(IS990)
D102 – BA100	(IS990)
D103 – OA90	(2OA90M)
D104 – OA90	(2OA90M)
D105 – OA90	(2OA90M)
D106 – BA100	(IS990)
D107 – BA100	(IS990)
D108 – OA90	(2OA90M)
D109 – BY126/100	(S-05)
D110 – BY126/100	(S-05)
D111 – BY126/100	(S-05)
D112 – BY126/100	(S-05)
D113 – BA100	(IS1212)
D114 – BA100	(IS1212)

PHILIPS

PHILIPS INDUSTRIES LIMITED

Branches in all States

Subject to modification

OCTOBER 1971

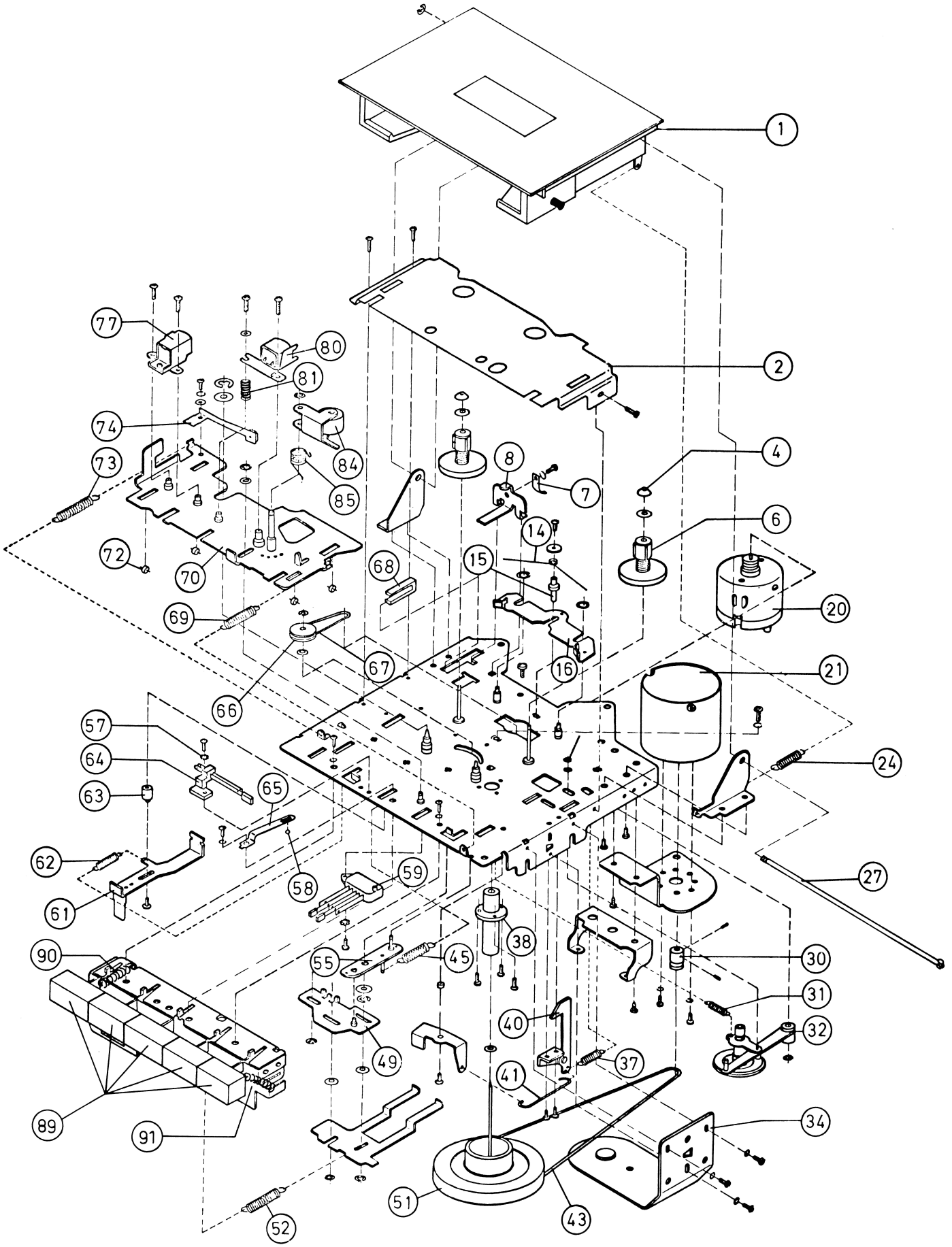
1
2
4
6
7
8
14
15
16
20
21
24
27
30
31
32
34
37
38
40
41
43
45
49
51
52
55
57
58
59
61
62
63
64
65
66
67
68
69
70
72
73
74
77
80
81
84
85
89
90
91

TRA 4272

Recorder	Pos.	
Cassette holder assembly	1	4822 443 60379
Cover plate on tape deck	2	4822 459 80047
Cap on turntables	4	4822 462 70822
Turntable assembly	6	4822 528 10262
Record safety lever	8	4822 403 50653
Brake arm spring	14	4822 492 40479
Brake arm collar	15	4822 535 90882
Brake arm	16	4822 403 50649
Motor for winding/rewinding	20	4822 361 20094
Drive motor assembly	21	4822 361 20095
Cassette holder spring	24	4822 492 31008
Cassette holder shaft	27	4822 535 90883
Motor pulley	30	4822 528 80514
Take-up mechanism	32	4822 403 20094
Spring for take-up mechanism	31	4822 492 31009
Bracket for unlocking cassette holder	40	4822 403 50647
Spring for bracket	37	4822 492 31011
Flywheel bearing	38	4822 520 10327
Coupling bar	41	4822 492 61783
Drive belt	43	4822 358 30175
Spring for winding/rewinding plate	45	4822 492 31012
Winding/rewinding plate	55	4822 403 20092
Winding/rewinding bracket	49	4822 403 50651
Spring on record safety lever	7	4822 492 61782

	Pos.	
Flywheel	51	4822 528 60074
Spring	62-52	4822 492 31007
Ball	58	4822 520 40037
Motor switch	59	4822 278 90289
Record lever assembly	61	4822 403 50654
Record lever boss	63	4822 532 20611
Switch	64	4822 278 90288
Leaf spring	65	4822 403 50654
Winding/rewinding pulley	66	4822 528 80513
Belt for fast-winding	67	4822 358 30176
Rubber cushion	68	4822 466 60593
Spring on slide plate	69	4822 492 31006
Slide plate	70	4822 464 50027
Roller	72	4822 528 90221
Spring on slide plate	73	4822 492 31013
Back tension lever	74	4822 403 50648
Erase head	77	4822 249 40062
Record/playback head	80	4822 249 10069
Torsion spring	81	4822 492 50974
Bracket with pressure roller	84	4822 403 20093
Torsion spring	85	4822 492 40481
Flywheel bracket	34	4822 404 60071
Push-button on recorder	89	4822 410 21127
Spring in push-button unit	90	4822 492 50973
Spring in push-button unit	91	4822 492 50972

HINTS FOR REPAIR OF RECORDER

Replacement of drive belt (Fig. 1)

Remove flywheel bracket (34) by unscrewing 3 screws; then the drive belt can be disengaged from the flywheel and the motor pulley.

Replacement of flywheel and take-up pulley (Fig. 1-2)

The flywheel (51) can be disengaged by removing the flywheel bracket (34). To disengage the take-up pulley (32) from the chassis, E must be removed from its shaft.

MECHANICAL ADJUSTMENT

Record/Playback Head (Fig. 3)

1. Insert a test tape (8945 600 11501), modulated over its full length at 6,300 Hz in the recorder.
2. Connect a voltmeter to the line output.
3. Set the recorder to position Playback.
4. Adjust azimuth adjustment spring (81) for maximum output voltage.
5. Lockpaint the setscrew.

Pressure Roller Assembly (Fig. 3)

1. Depress the PLAY push-button.
2. Adjust the position of the pressure roller spring (85) by using any of the four holes at the base of the pressure roller shaft on the sliding sub-chassis, so that the force of the pressure roller is between 12-19 ounces (350-450 grs.).

Checking the speed

The speed check should be carried out with the aid of test tape 4822 397 30005 on which a 800 Hz signal is modulated at intervals of 4.75 m. Insert the cassette with test tape. Switch on in position "playback". The time between two 800 Hz signals should be between 95 sec. and 103 sec. If this period is less than 95 sec. the speed is too high. The speed is too low if the interval between the two signals is more than 103 sec.

Anti-erase protection

The recorder is equipped with a locking device so that a pre-recorded cassette cannot be erased.
The locking device consists of recording safety lever (8) and spring (7). With a standard cassette, the recording safety lever is depressed back when the cassette is inserted.
With a pre-recorded cassette, however, the cams at the corners of the cassette may be broken out so that the recording safety lever is not pushed back when the cassette is inserted.

Mechanical and electrical function (Fig. 2)

Playback
When the PLAY push-button is depressed the sliding sub-chassis assembly (70) on which the erase head (77) and record/playback head (80) are mounted, and brake lever are pressed downward. The following functions are performed:

a. The brake arm assembly (16) is detached from the turntables and the leaf switch (64) turns on both the drive motor and the audio amplifier.
b. The record/playback and erase heads are pressed against the tape while the pressure roller assembly (84) presses the tape against the capstan.
c. Both turntables are free from the brake lever and therefore, the tape can be wound on the take-up turntable.
d. Flywheel (51) which is rotated by the drive motor via belt (43) constantly transports the tape with its capstan shaft and also conveys its rotation to the take-up turntable via take-up mechanism assembly (32).

Recording

a. When recording, the RECORD and PLAY push-buttons must be depressed at the same time.
b. By setting the RECORD push-button, the record lever assembly (61) is pushed to set the record/playback slide switch (SK-C) to the record position.
c. The function for tape transport is exactly the same as playback mode.

ADJUSTMENT OF BIAS OSCILLATOR (fig. 5)

Insert a cassette in the recorder; then set the recorder position Playback.
By connecting the two terminals of the Erase Head to the digital counter, adjust the coil [J] so that the oscillation frequency is set at 40 kHz.
Then, connect Ra (100 ohms) to the earth side of record/playback head and adjust R66 so that V1 is set at 35 mV.

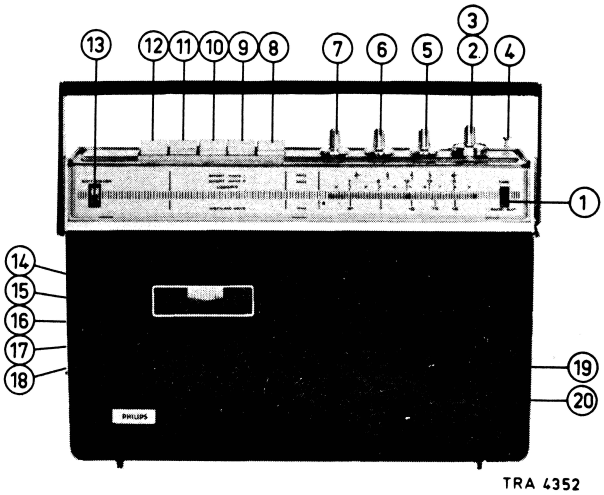

FUNCTIONS OF CONTROLS

1	Tape-radio switch	SK-B	11	Play button	**SK-C**
2	Main tuning	C7	12	Stop-eject button	**SK-G**
3	Fine tuning	C30	13	Battery indicator	
4	Telescopic aerial		14	Earphone jack	
5	Volume control + on/off switch	R39 + SK-C	15	Remote jack	
6	Tone control	R48	16	Microphone jack	
7	MW/SW1/SW2 selector switch	SK-A	17	Auxiliary jack	**SK-P**
8	Recording button	SK-C	18	Monitor on/off switch	**SK-D**
9	Rewinding button	SK-F	19	Mains/Battery switch	**SK-I**
10	Fast forward button	SK-F	20	Supply connection	

Disassembly instruction

Removing the back panel of the cabinet:
- Remove 5 screws from the back of the cabinet.
- Lift the back cabinet 2 or 3 inches away from the recorder and carefully pull out a lead of FM aerial from the connector located on the RF amplifier board.

Removing the RF amplifier

- Remove 5 control knobs such as tuning, fine tuning, volume, tone and band selector from the top of the recorder.
- Remove 4 screws marked A from the RF amplifier.
- Carefully pull the RF amplifier forwards.
- Unsolder leads if necessary.

Removing the Audio amplifier

- Remove 1 screw marked B from the audio amplifier.
- Slightly lift and pull the amplifier forwards.
- Unsolder leads if necessary.

Removing the Rectifier P.C. Board

- Remove 3 screws marked C.
- Now the rectifier p.c. board can be lifted.

Removing the chassis

- Remove 2 studs marked D and also 2 screws marked E.
- Now the entire chassis can be drawn out of the front cabinet.

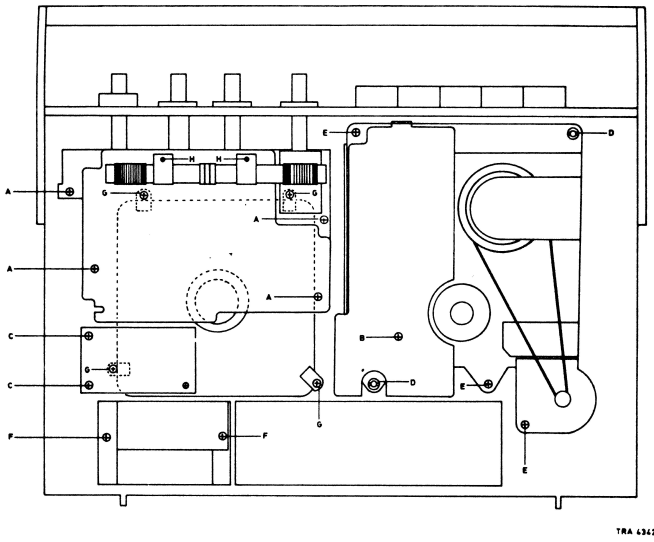

S	8 7 10 9 15 14 16 12 11 13 25 24 26 23 22 21 19 17 20 18 2 1 36 37 33 32 34 35 31 30 29 28 27	S
C	40 28 29 31 32 8 9 10 5 12 38 4 3 2 1 15 3 4 21 26 27 69 77 76 72 44 67 60 78 61 59 47 52 51 46 53 68 50 48 49 45	C
C	37 34 33 36 35 42 41 83 14 16 39 17 19 6 23 20 24 25 71 70 73 75 74 81 82 79 80 64 65 62 66 63 57 55 56 58 54	C
R	20 1 2 4 5 7 6 8 11 13 15 18 16 17 62 58 82 69 52 68 57 67 56 66 54 47 51 44 35 34 43 38 30 35 24 26 25 28 27	R
R	21 19 3 10 9 12 81 14 17 63 70 59 90 61 53 64 50 49 45 41 46 31 40 60 36 37 32 29 42 33	R

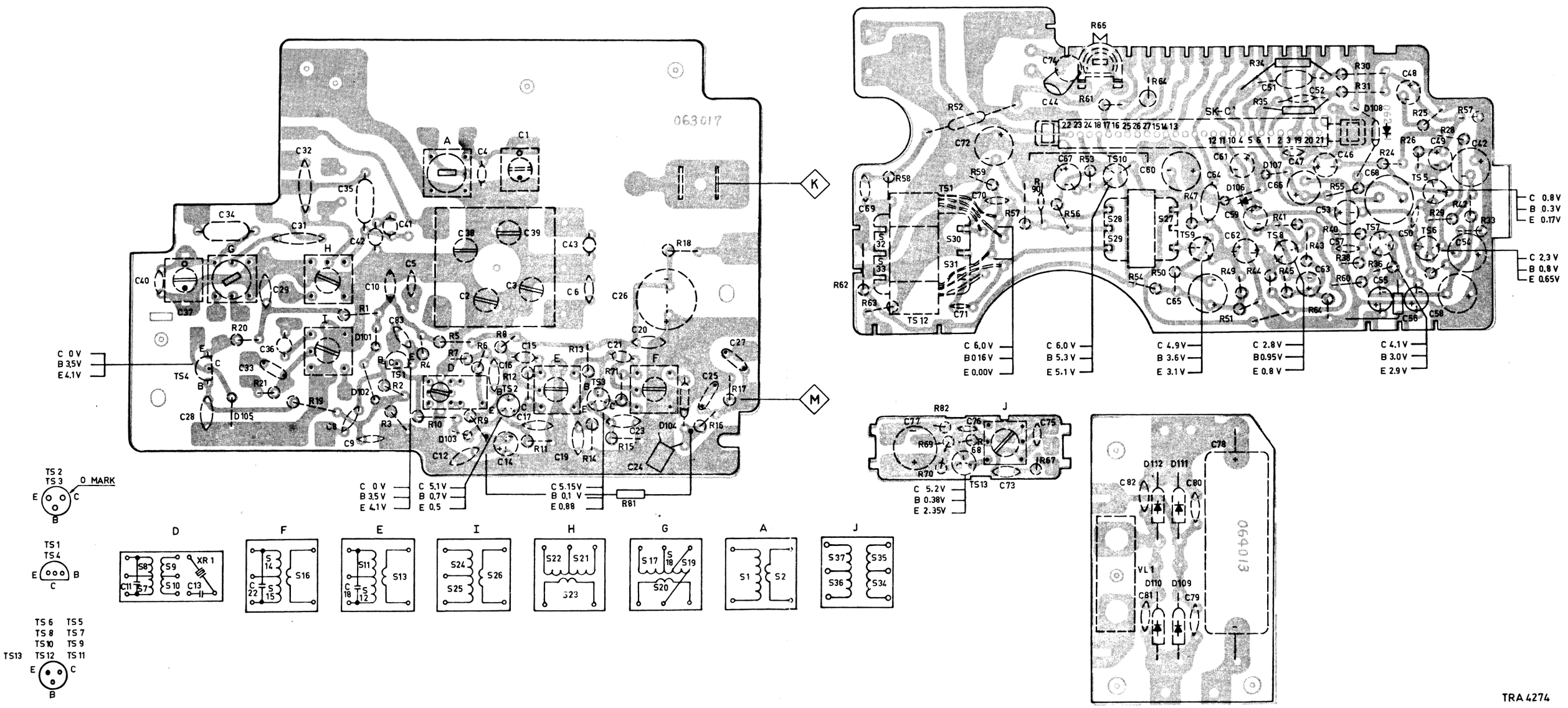

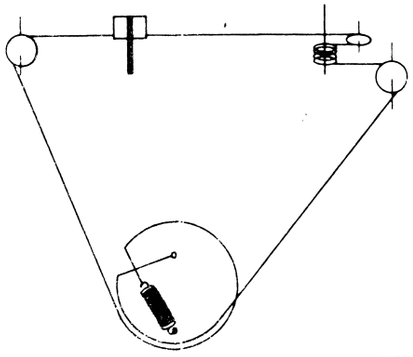

CS29907

| | | |

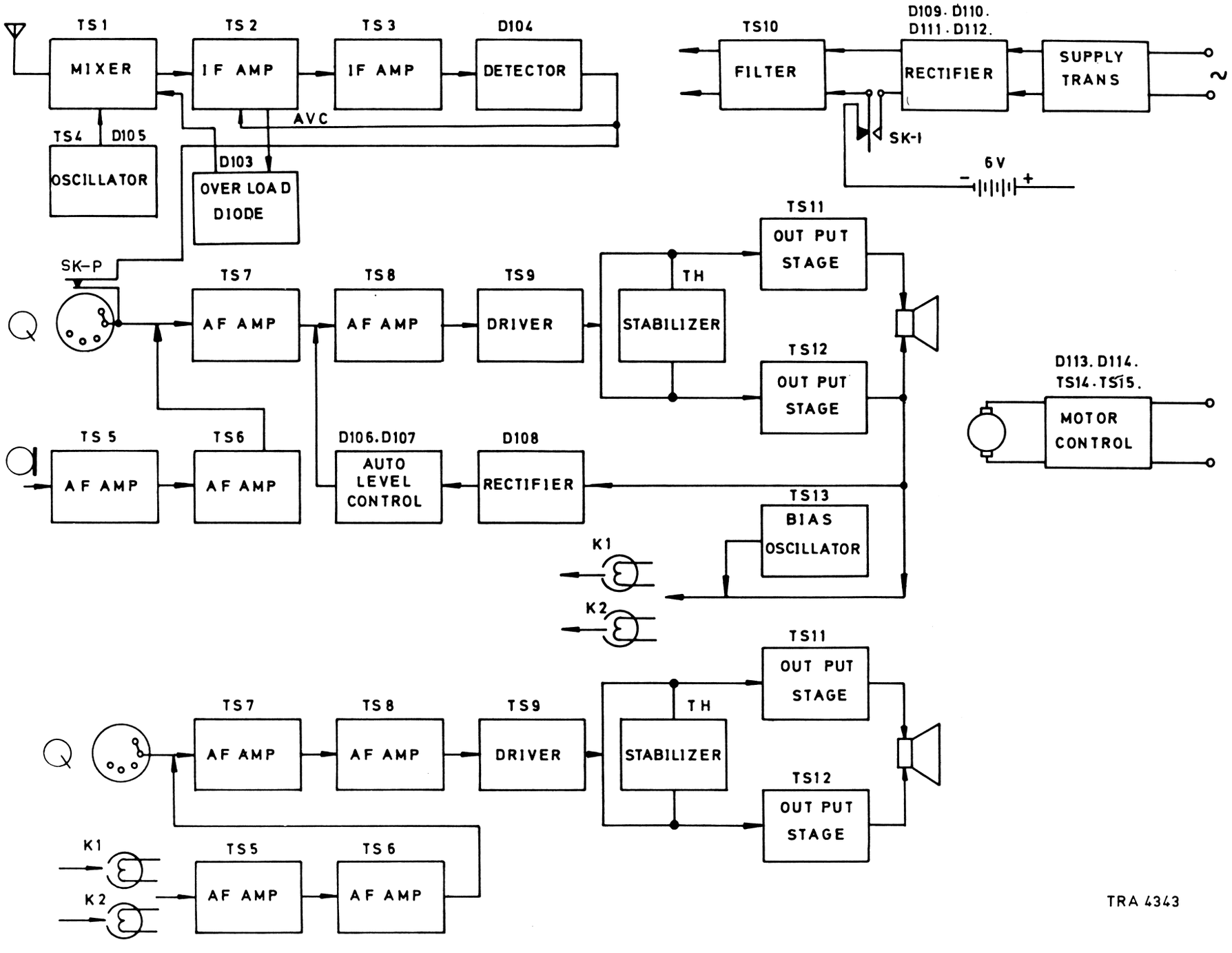
TS1
MIXER
TS2
IF AMP
TS3
IF AMP
D104
DETECTOR
AVC
TS4
D105
OSCILLATOR
D103
OVER LOAD DIODE
TS10
FILTER
D109. D110.
D111. D112.
RECTIFIER
SUPPLY TRANS
SK-1
6V
SK-P
TS7
AF AMP
TS8
AF AMP
TS9
DRIVER
TH
STABILIZER
TS11
OUT PUT STAGE
TS12
OUT PUT STAGE
D113. D114.
TS14. TS15.
MOTOR CONTROL
TS5
AF AMP
TS6
AF AMP
D106. D107
AUTO LEVEL CONTROL
D108
RECTIFIER
TS13
BIAS OSCILLATOR
K1
K2
TS7
AF AMP
TS8
AF AMP
TS9
DRIVER
TH
STABILIZER
TS11
OUT PUT STAGE
TS12
OUT PUT STAGE
K1
K2
TS5
AF AMP
TS6
AF AMP
TRA 4343

SK.... (wave range)	(signal to)		Var. cap.	(adjustment)	(output)
MW (517-1635 kHz)	1	L	C7, C30 Min. cap.	F E D	Max.
MW (517-1635 kHz)	510 kHz	L	C7, C30 Max. cap.	I	Max.
	1650 kHz		C7, C30 Min. cap.	C39	
MW (517-1635 kHz)	600 kHz 1400 kHz		2	C C3	Max.
. Repeat the above adjustment procedures two or three times.					
SW1 (2.1-6.6 MHz)	2.0 MHz	L	C7, C30 Max. cap.	H	Max.
	6.8 MHz		C7, C30 Min. cap.	C38	
SW1 (2.1-6.6 MHz)	2.5 MHz		2	B	Max.
	6.0 MHz			C2	
. Repeat the above adjustment procedures two or three times.					
SW2 (7-18 MHz)	6.8 MHz	K via 8 pF	C7, C30 Max. cap.	G	Max.
	18.5 MHz		C7, C30 Min. cap.	C37	
SW2 (7-18 MHz)	7 MHz	K via 8 pF	2	A	Max.
	17 MHz			C1	
. Repeat the above adjustment procedures two or three times.					

1 Determine the resonator frequency by varying the generator frequency between 440 and 460 kHz. The frequency at which the deflection of the output meter is maximum is the natural frequency of resonator XR-1.

2 Tune the set to the generator.

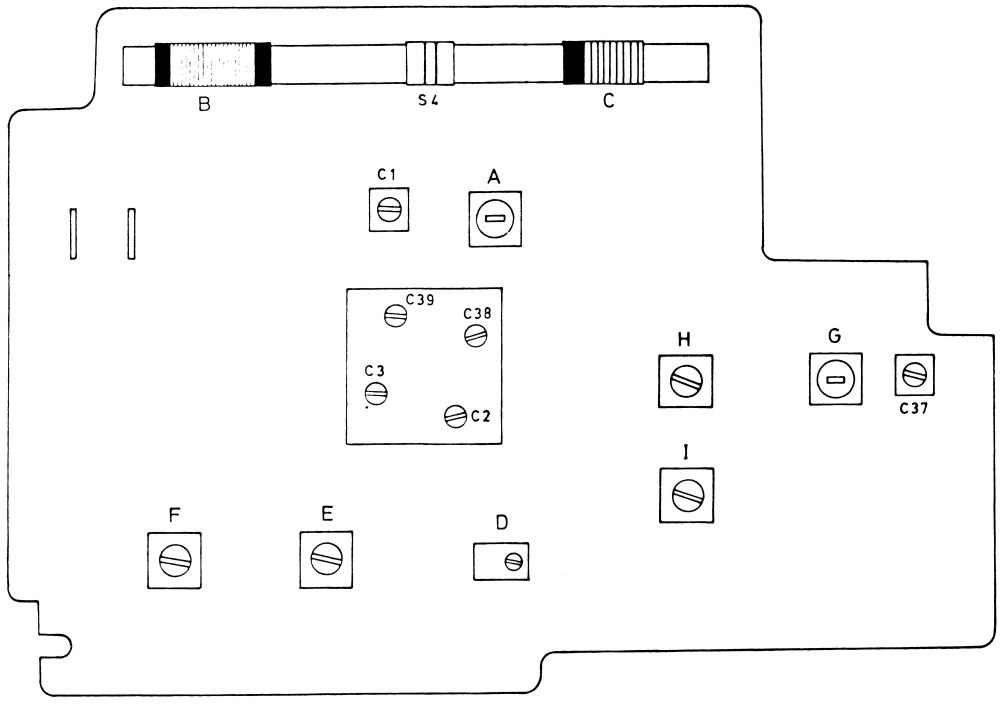

TRA 4269

CS29906

S	50 F E D A H 1 5 6 4 G 3 41 42 40 30 32 33 27÷29 31 38 39	S
C	79 78 80 27 24 26 43 1 7 30 4 41 42 35 36 32 34 37 40 74 72 69 67 70 84 64 53 54 62 71 77	C
C	81 82 25 20 21 6 15 39 16 38 5 10 9 8 31 28 51 52 47 67 46 49 68 66 59 57 65 56 76 73	C
C	23 19 17 3 14 2 12 83 29 33 44 48 60 61 45 50 85 63 55 58 75	C
R	23 65 48 39 18 71 13 11 12 8 6 7 5 4 2 1 19 21 20 66 61 52 26 58 55 56 38 44 37 62 63 82 69 70	R
R	22 17 16 15 14 81 9 10 3 34 64 25 24 59 57 47 29 43 36 50 49 54 60 68 67	R
R	30 31 35 27 28 53 26 90 41 40 42 33 32 45 51 46	R

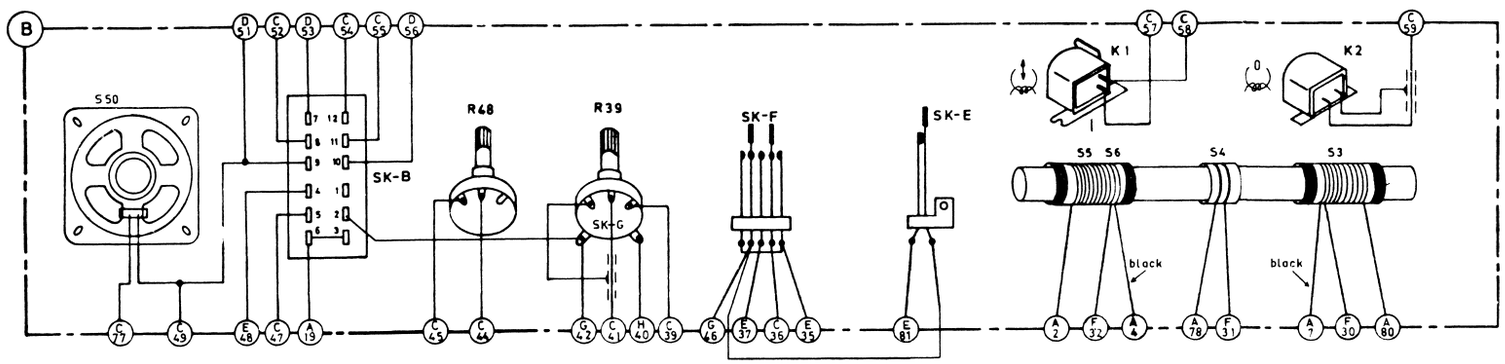

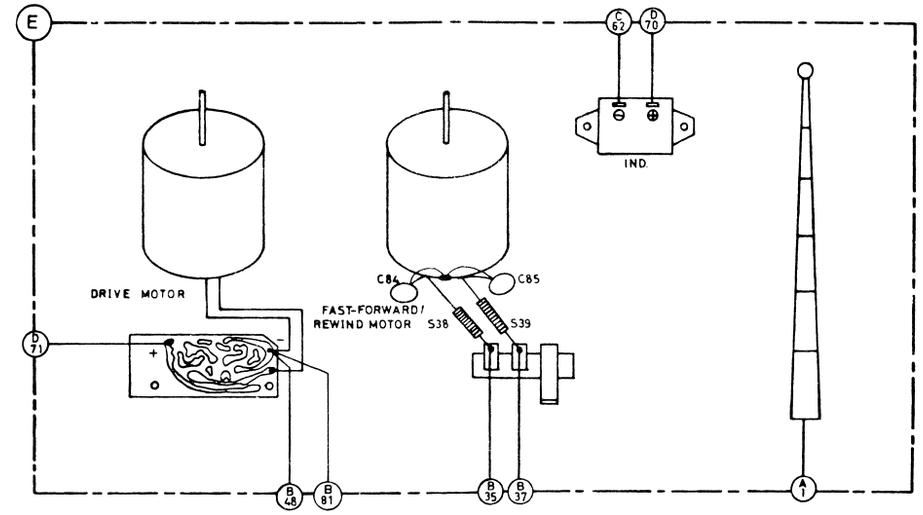

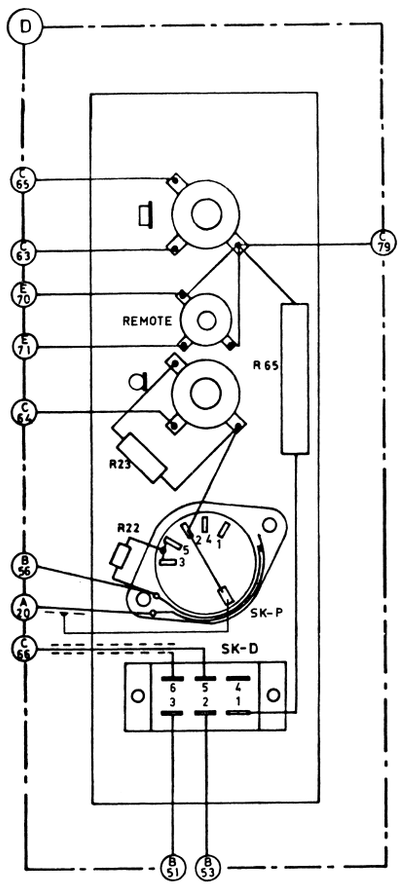

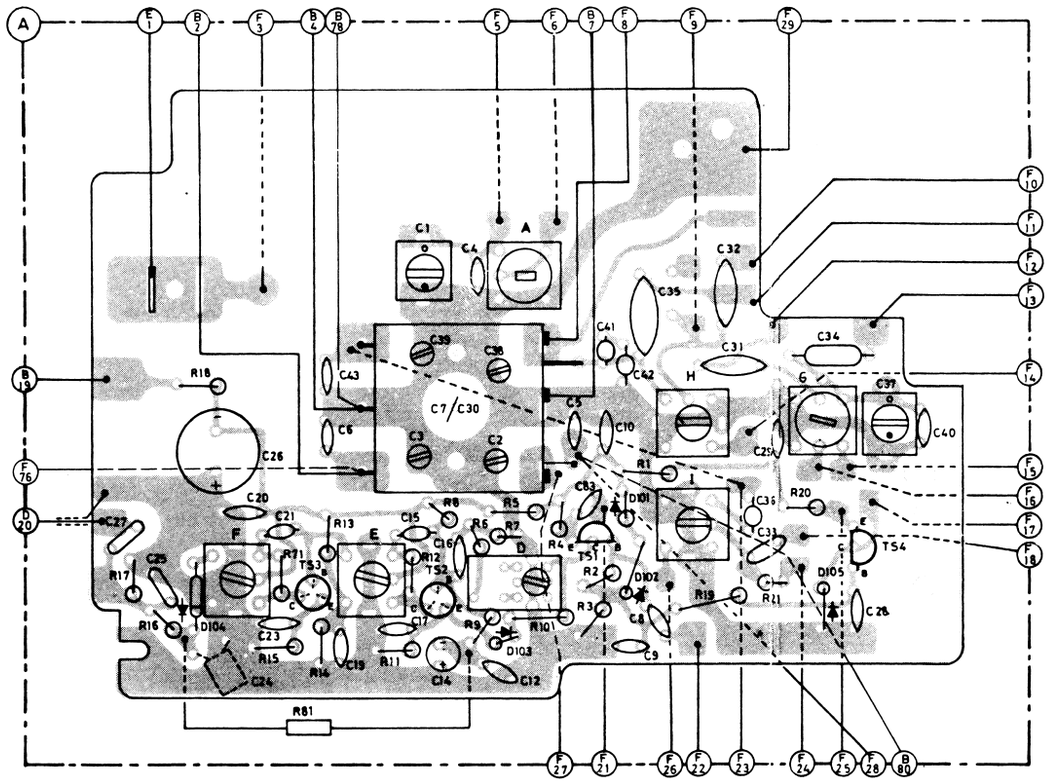

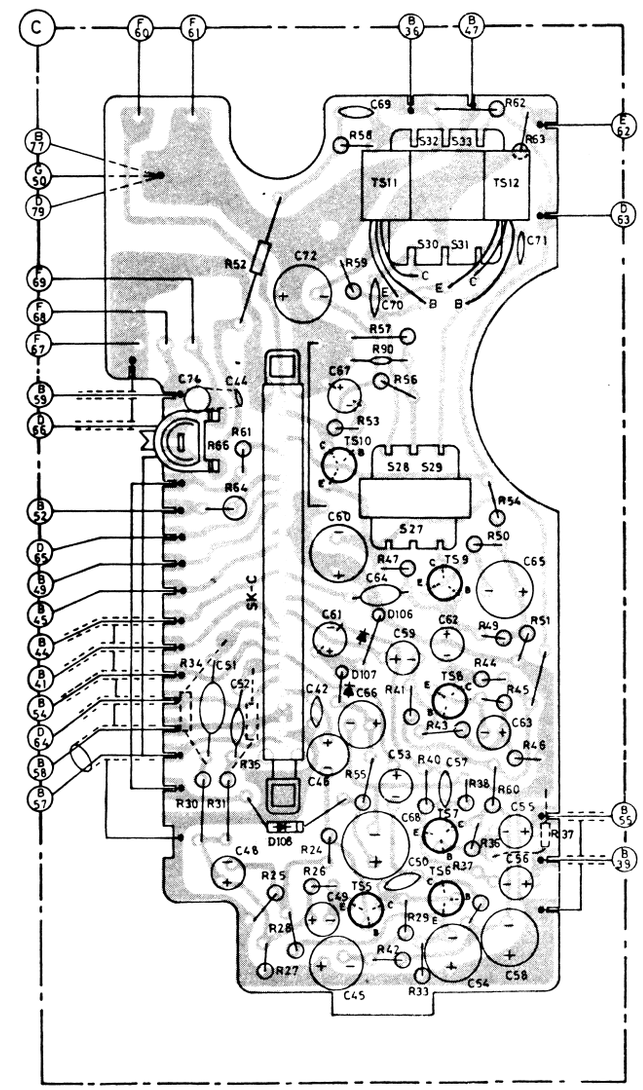

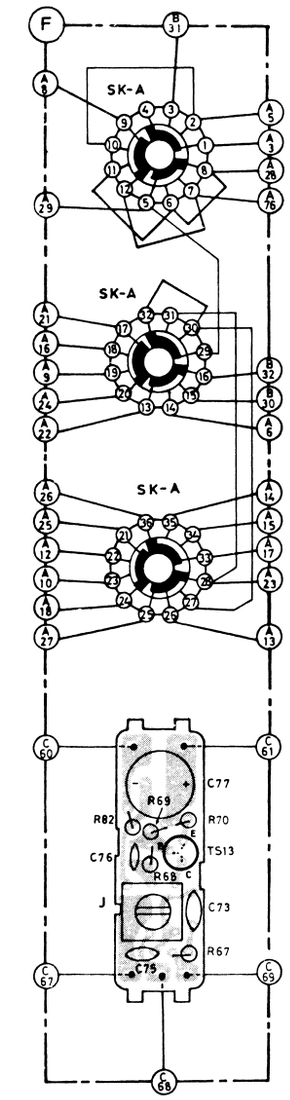

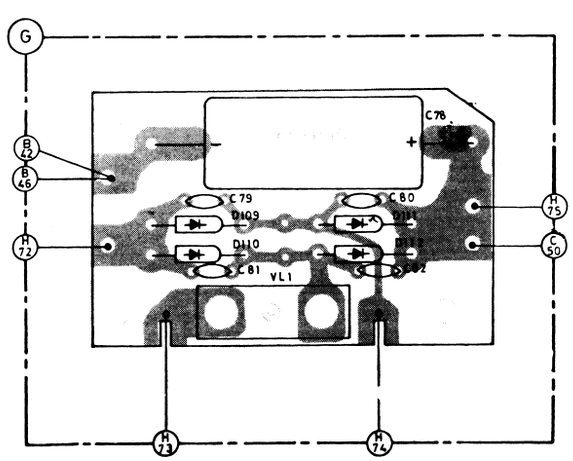

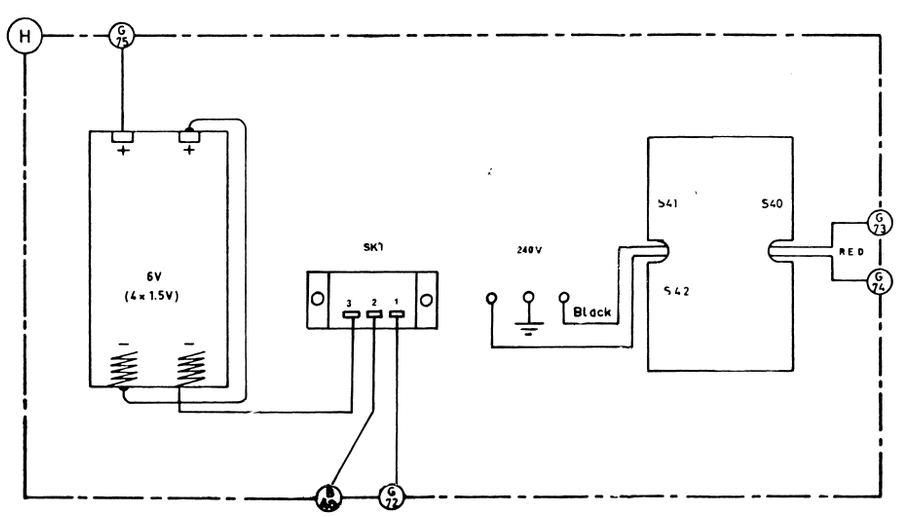

TRA 4273

Wiring example: Wire (F 1) (mentioned under unit A) leads to unit E, and is then referred to as (A 1)

CS29909

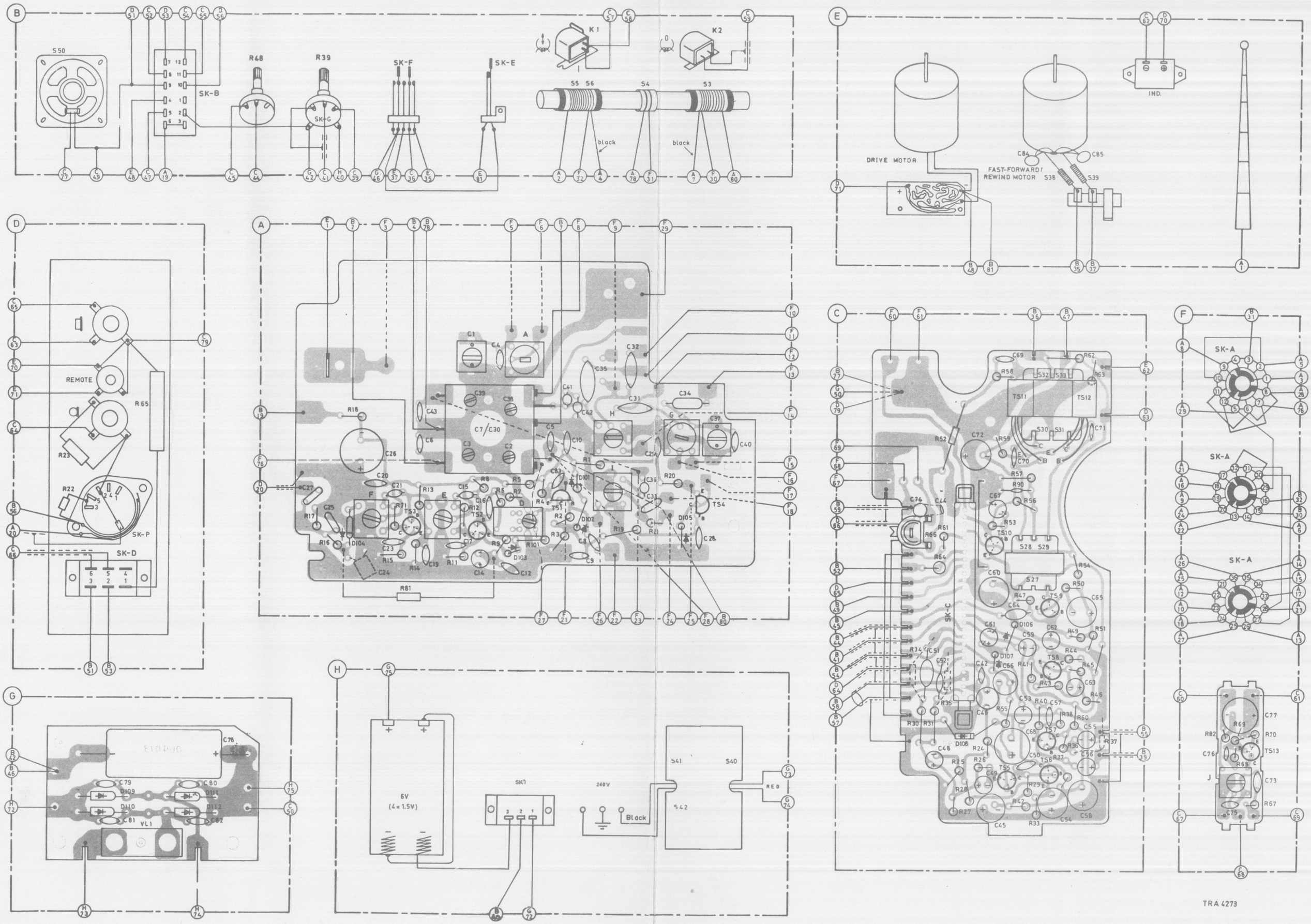

TRA 4273

Wiring example: Wire (F 1) (mentioned under unit A) leads to unit E, and is then referred to as (A 1)

CS29909

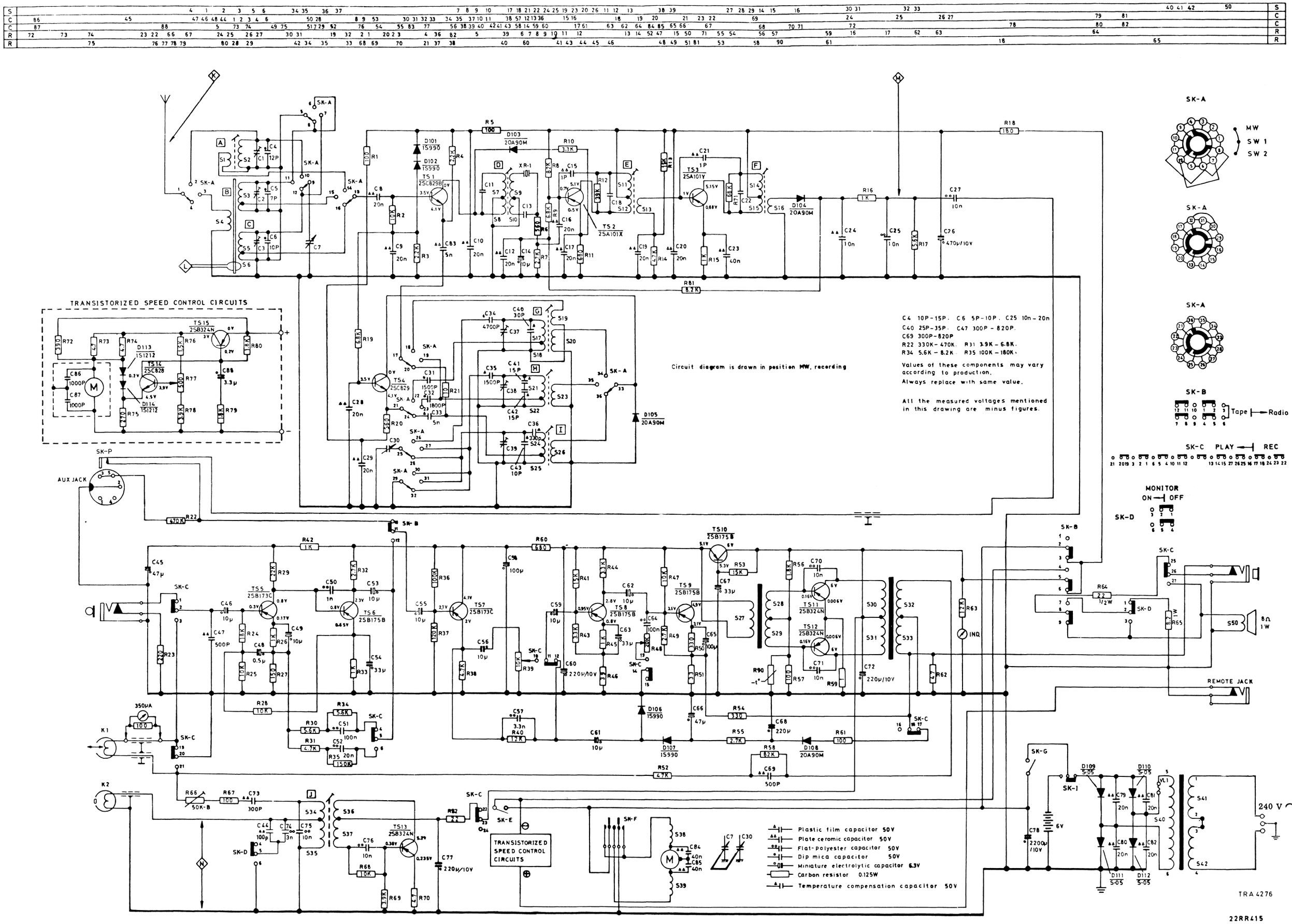
TRANSISTORIZED SPEED CONTROL CIRCUITS
Circuit diagram is drawn in position MW, recording
C4 10P-15P. C6 5P-10P. C25 10n-20n
C40 25P-35P. C47 300P-820P.
C69 300P-820P
R22 330K-470K. R31 3.9K-6.8K.
R34 5.6K-8.2K. R35 100K-180K.
Values of these components may vary according to production.
Always replace with same value.
All the measured voltages mentioned in this drawing are minus figures.
SK-A
MW
SW 1
SW 2
SK-B
Tape
Radio
SK-C PLAY REC
MONITOR
ON OFF
SK-D
SK-P
AUX JACK
REMOTE JACK
8Ω 1W
240 V ~
TRANSISTORIZED SPEED CONTROL CIRCUITS
Plastic film capacitor 50V
Plate ceramic capacitor 50V
Flat-polyester capacitor 50V
Dip mica capacitor 50V
Miniature electrolytic capacitor 6.3V
Carbon resistor 0.125W
Temperature compensation capacitor 50V
TRA 4276
22RR415

CS29908

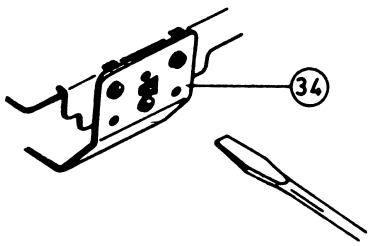

TRA 4268

Fig. 1

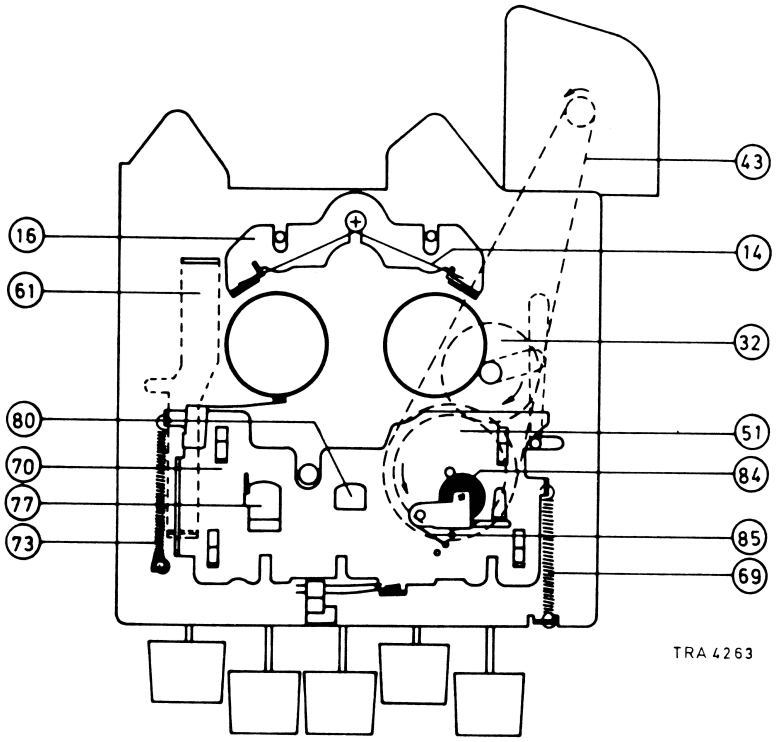

TRA 4263

Fig. 2

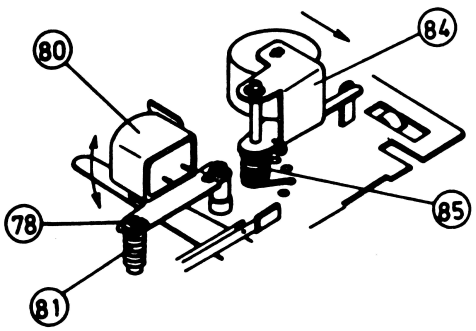

TRA 4267

Fig. 3

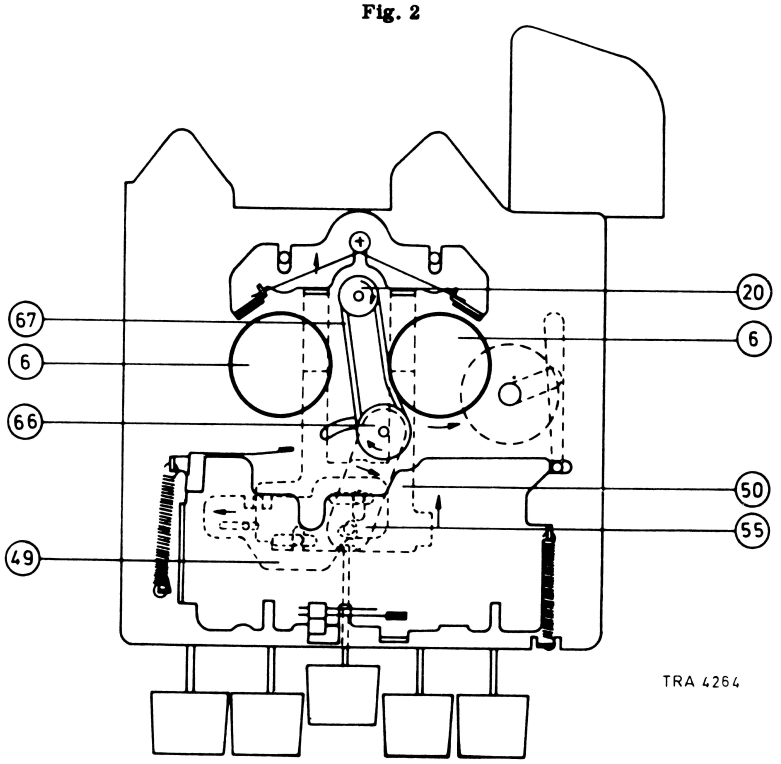

TRA 4264

Fig. 4

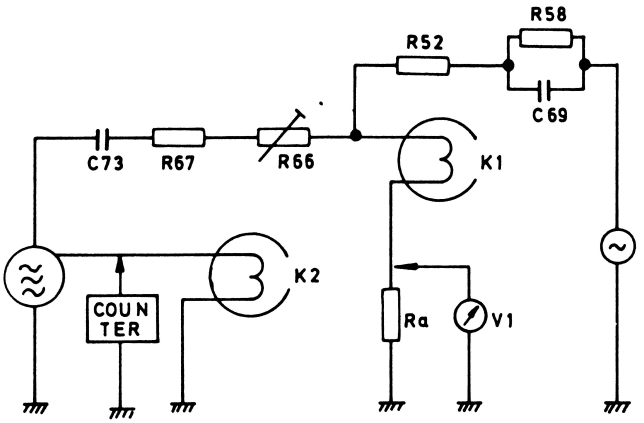

Fig. 5

CS29911

TRA 4341

-S-		
S1-2	4822 157 10075	
S3-6	4822 158 60316	
S7-10	4822 156 30391	
S11-13, S14-16	4822 156 30389	
S17-20	4822 156 30388	
S21-23	4822 156 30387	
S24-26	4822 156 30386	
S27-29	4822 142 40238	
S30-33	4822 140 60213	
S34-37	4822 156 30385	
S40-42	4822 145 30109	
S50	4822 240 20113	

-R-		
R39	4822 101 50157	10 kΩ
R48	4822 101 30265	20 kΩ
R66	4822 100 10076	50 kΩ
R90	4822 116 30112	NTC

-D-	
D101, D102, D106, D107	BA100
D103, D104, D105, D108	OA90
D109, D110, D111, D112	BY126/100
D113, D114	BA100

-C-		
C7/C30	4822 125 20169	
C1, C37	4822 125 50069	
C78	4822 124 20426	2200 μF 10 V

-TS-	
TS1, TS4	BF185
TS2, TS3	AF116N
TS5, TS7	AC125
TS6, TS8, TS9, TS10	AC126
TS11, TS12, TS13, TS15	AC128
TS14	BC108

- Var. -		
VL1	974/V1000	1 A
Ind.	4822 347 10078	

MECHANICAL PARTS LIST

Cabinet assembly	4822 420 50046
Rear panel	4822 422 50028
Battery cover	4822 423 40305
Ornamental strips	4822 460 10302
Telescopic aerial	4822 303 30118
Bracket fixing telescopic aerial	4822 404 10166
Handle assembly	4822 498 40321
Ornamental screw fixing handle	4822 502 11253
Rear panel strip	4802 454 17001
Plate fix. connections (large)	4822 459 50131
P.U. connections	4822 267 40009
Slide switch, monitor	4822 277 20129
Connecting bush for microphone	4822 267 30178
Connecting bush for earphone	4822 267 30043
Knob tuning	4822 413 40538
Knob (volume, tone, fine-tuning)	4822 413 40539
Knob (wave range)	4822 411 20192
Wave range switch	4822 273 80156
Mains inlet	4802 265 27002
Battery compartment	4822 256 60195
Tuning spindle	4822 520 50022
Bracket fixing rod aerial	4822 401 10585
Pointer	4822 450 80365
Drive cord	4822 321 30102
Switch (radio/tape rec.)	4822 277 20131
Drum on variable capacitor	4822 528 30153
Spring on drum	4822 492 31005
Pulley	4822 528 80027
Switch for recording/playback	4822 277 30514
Scale	4822 334 50084
Microphone	4822 242 10004
Mains cord	4802 321 17004