22RH591

00/15/16/22/33/43

Voltages	110-127-220-240 V~
Output impedance:	
LS-system I	8 Ω - 16 Ω
LS-system II	8 Ω - 16 Ω/4 Ω
Output power	8 Ω - 2x20 W d < 1 %
	4 Ω - 2x15 W d < 1 %
Consumption	15 W - 100 W
Sensitivity for 2x20 W:	
PU dyn.	3 mV - 50 kΩ
Tuner	100 mV - 500 kΩ
Tape recorder	3-5
	100 mV - 500 kΩ
	1-4
	75 mV - 22 kΩ
Auxiliary	100 mV - 500 kΩ
PU-crystal	
Monitor	100 mV - 500 kΩ
Dimensions	418x87x255 mm

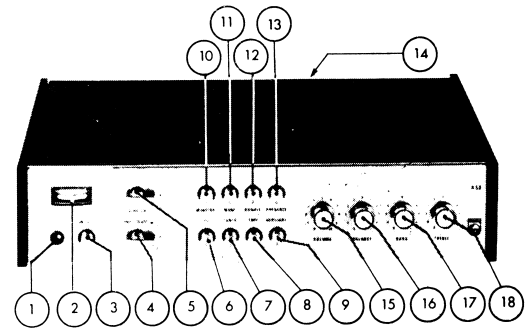

TRA 3668

1	On/off indicator	LA470	7	Tuner switch	SK-G	13	Presence switch	SK-N
2	Balance indicator	IND401	8	Recorder switch	SK-H	14	Loudspeaker switch	SK-Q
3	On/off switch	SK-A SK-B	9	Auxiliary switch	SK-J	15	Volume control	R406
4	Physiology switch	SK-D	10	Monitor switch	SK-K	16	Balance control	R405
5	Scratch switch	SK-E	11	Mono/stereo switch	SK-L	17	Bass control	R407
6	P.U. switch (dyn.)	SK-F	12	Rumble switch	SK-M	18	Treble control	R408

DESCRIPTION OF THE DIAGRAM

Balance indicator

The balance is measured with a moving-coil meter. As to the left-hand signal, only positive amplitudes will be passed on because D457a blocks the negative pulses.
The voltage across D459 will never exceed about 0.7 V, for then the diode is fully conductive.
The positive voltage of the right-hand signal will be cut off by D457b. The negative pulses originate from the right-hand signal; again the value of about 0.7 V cannot be exceeded because of the limitation by D460.
The meter will now indicate the average value of the two signals across the diodes D459/D460. If the left-hand signal is larger, the pointer of the meter will deflect positively; if, however, the amplitude of the right-hand signal is larger, the average voltage indicated by the meter is negative. Capacitor C603, connected in parallel with the meter, prevents the pointer from vibrating. (If this were not the case the vibrations would be clearly visible at low frequencies.) The current/voltage characteristic of the diodes D459/460 ensures that the meter deflects less far if the voltage reaches a value in the vicinity of the knee voltage of the diodes (about 0.7 V). As a result, the values at both extremities of the scale are closer to each other.

Protection of the output amplifier against damage owing short-circuit

For the sake of simplicity only the left-hand channel is dealt with.
If owing to some cause the output of the output amplifier is short-circuited, the voltages of the emitter of TS441b and of the collector of TS441d are reduced to zero (connected to earth).
The LF signal is applied to the base of TS441a and TS441b.
The emitter resistor R865 of TS441a causes a strong feedback to prevent overdriving.
As to the negative amplitude, TS441b has no feedback.
To overcome this difficulty, a series connection of a normal diode and a Zener diode has been fitted between the base of this transistor (via R859) and the emitter. If the negative voltage on the anode of the Zener diode has a value in excess of about 5.8 V, the two diodes will start conducting, and thus the signal will be limited.

Compensation of the supply hum

Because of the full-wave rectification in the supply section (for the +30 V and the -30 V) a hum of 100 Hz (or 120 Hz) may be possible. Via C587 and R831 a hum, if any (in the -30 V), is applied to the emitter of TS433. Consequently, this 100 Hz signal is applied to the base of TS439 and is then in opposite phase with the signal on the emitter of TS439. Now, the value of R831 is such that the two signals are equally strong and counteract each other.

- After having switched on the set, adjust the collector currents of TS441c and TS442c to 40 mA, with the aid of R851 and R852. Check after 5 minutes: these currents should be 35-50 mA. If necessary, readjust these currents.
- After 5 minutes the collector voltage of TS441d and TS442d should be adjusted to 0 ± 25 mV with the aid of R809 and R810.
- Adjusting the balance:
  1. Set the pointer of indicator 401 mechanically to the centre of the scale.
  2. Apply a signal until the output voltage is 10 Va.c. After balance control R405 has been turned fully clockwise/fully anti-clockwise, the balance indicator should be adjusted to full deflection to the right/left, with the aid of R881.

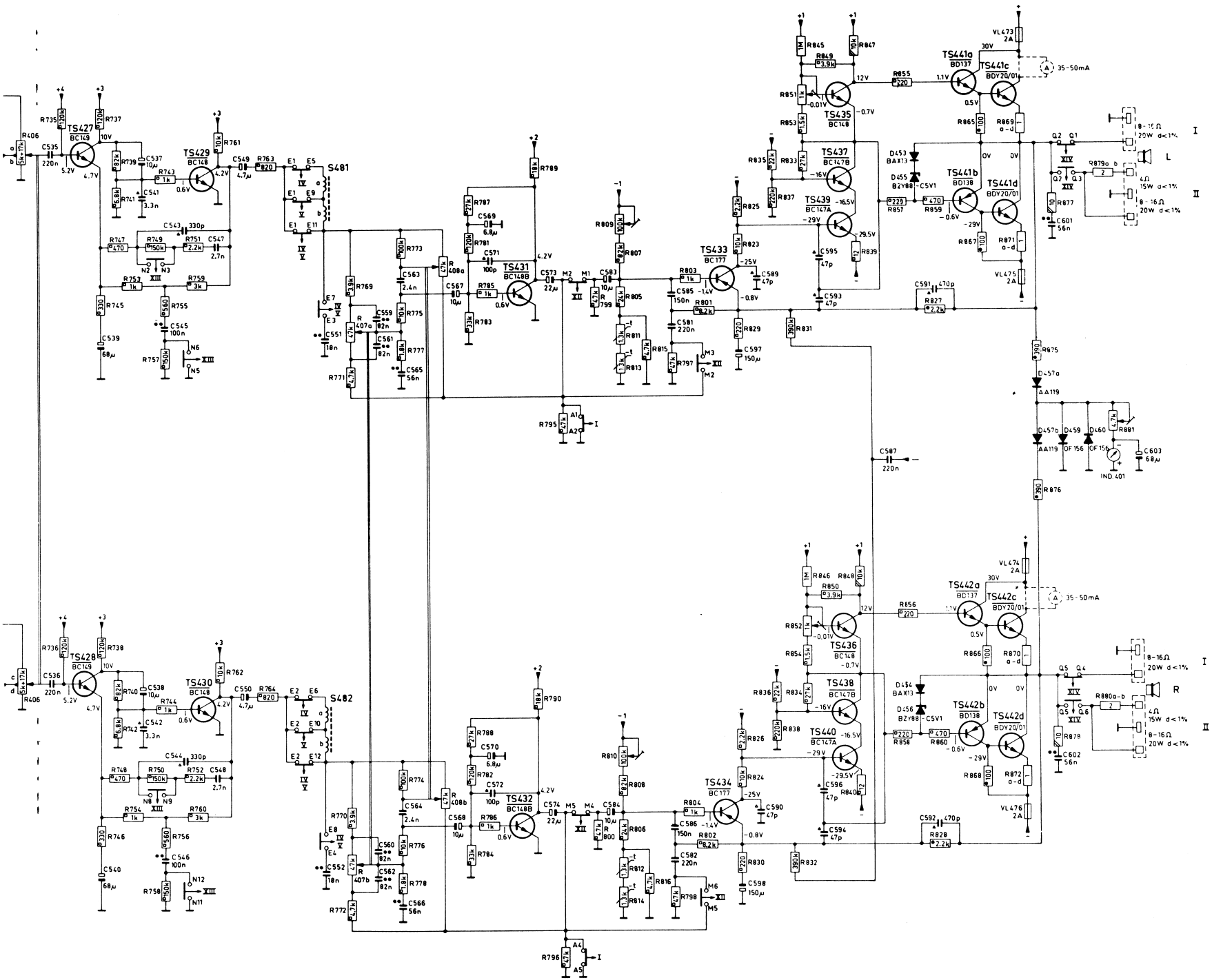
TS427 BC149
TS428 BC149
TS429 BC148
TS430 BC148
S481
S482
TS431 BC148B
TS432 BC148B
TS433 BC177
TS434 BC177
TS435 BC148
TS436 BC148
TS437 BC147B
TS438 BC147B
TS439 BC147A
TS440 BC147A
TS441a BD137
TS441b BD138
TS441c BDY20/01
TS441d BDY20/01
TS442a BC137
TS442b BD138
TS442c BDY20/01
TS442d BDY20/01
VL473 2A
VL474 2A
VL475 2A
VL476 2A
35-50mA
8-16Ω 20W d<1%
4Ω 15W d<1%
IND 401
L
R

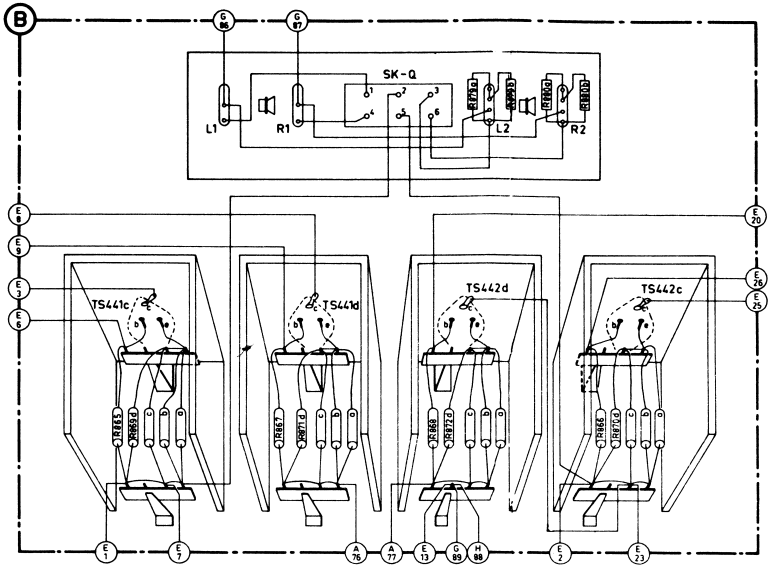

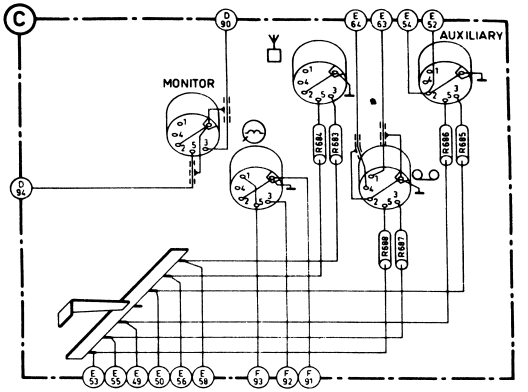

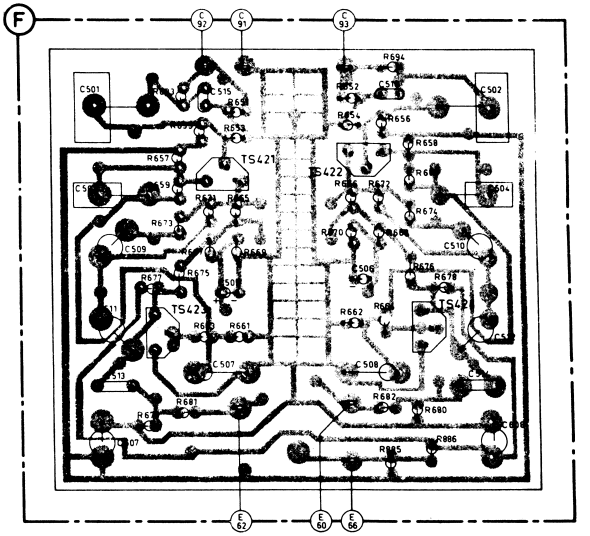

S403	1–2	3–4	5–6	6–7	8–9 19–18	10–11 15–14	11–12 14–13	16–17
V	110	18	18	110	77	22	22	9.1
I (A) (max)					0.03	2	2	0.1

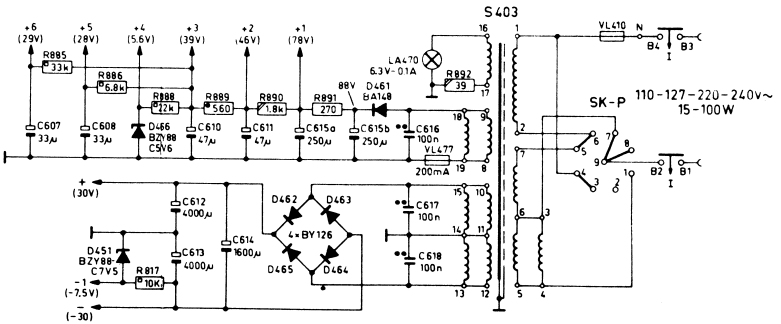

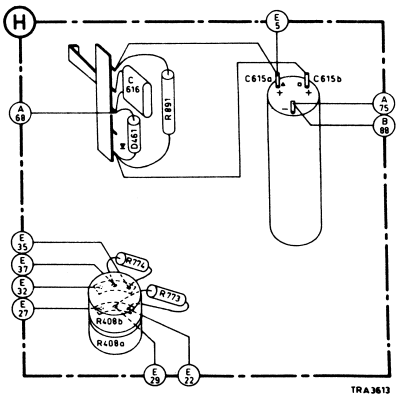

P1-26 PHILIPS 22RH591

Carbon resistor E24 series	0.125 W		5%
Carbon resistor E12 series	0.25 W	< 1 MΩ	5%
		> 1 MΩ	10%
Carbon resistor E12 series	0.5 W	< 1.5 MΩ	5%
		> 1.5 MΩ	10%
Ceramic capacitor "Pin-up"	500 V		
plate ceramic capacitor			
Flat-foil polyester capacitor			

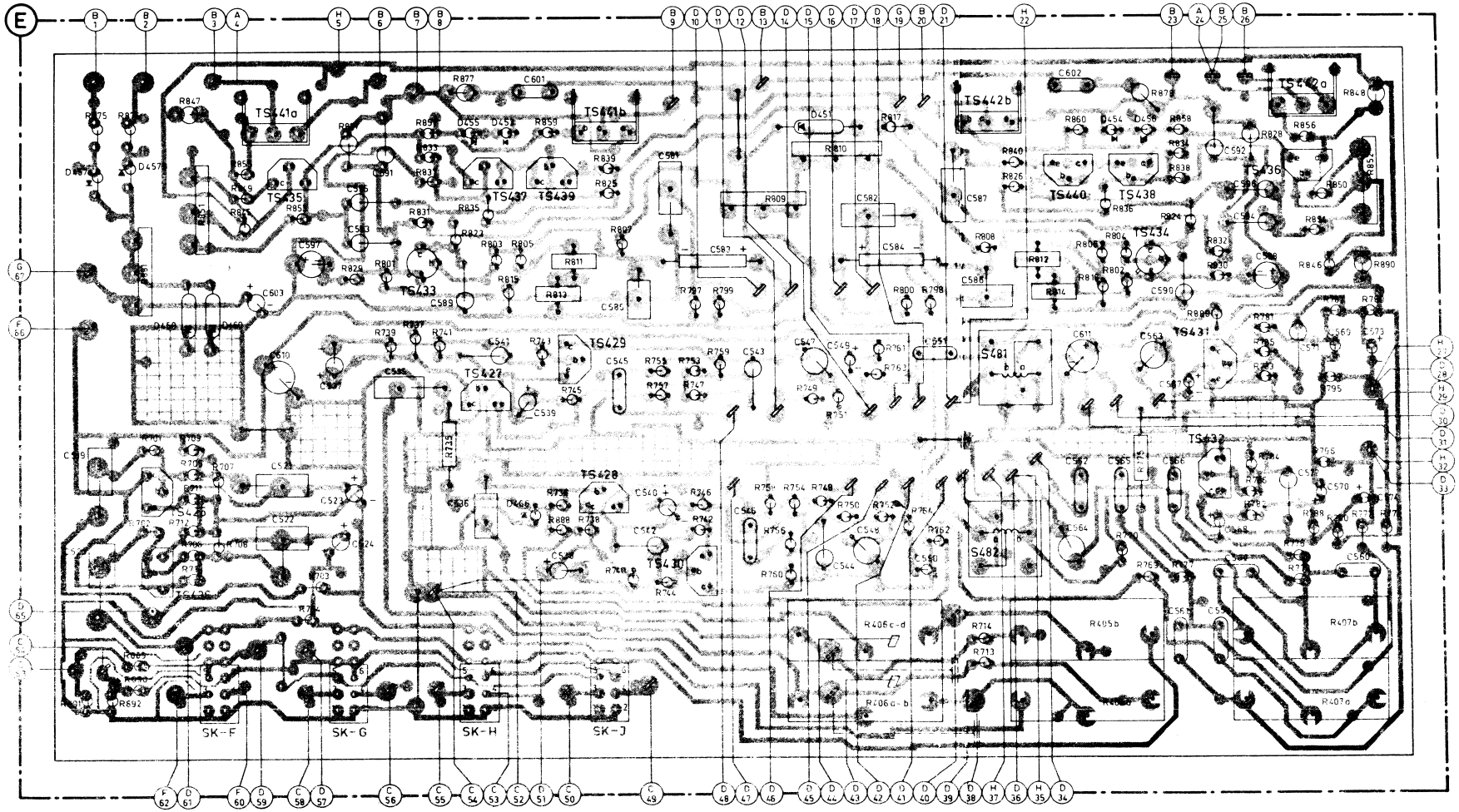

Wire (A 78) (mentioned under unit G) leads to unit A, and is then referred to as (G 78)

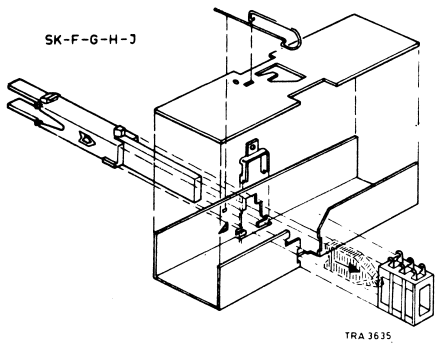

. For removal of the slide of SK-F-G-H-J see TRA3635.

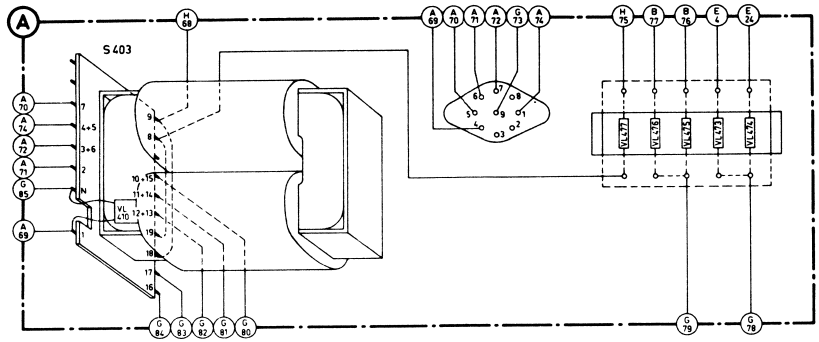

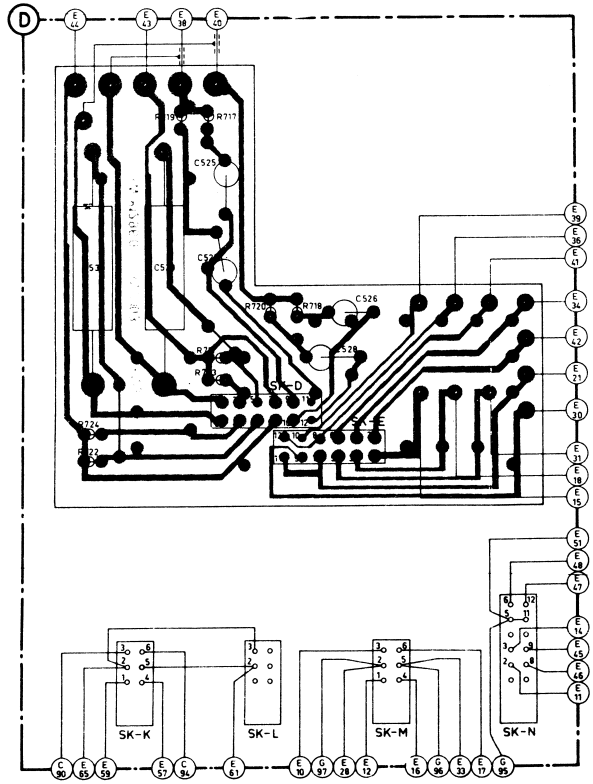

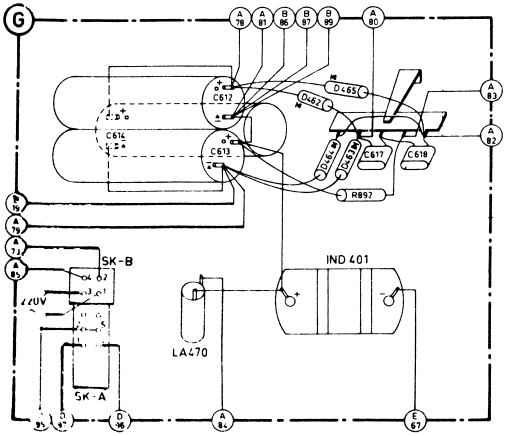

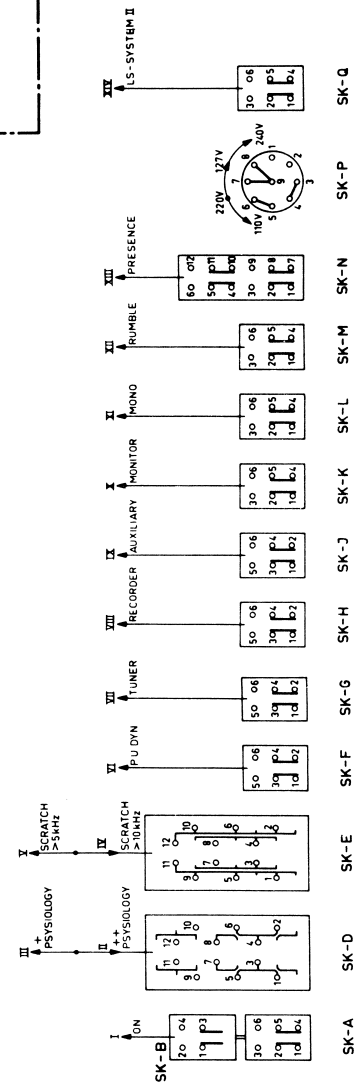

PHILIPS 22RH591

P1-26