Cassette auto radio 22DC846

02/75/78

Service
Service
Service

For repair information of the tape-deck, see Service Manual Auto-Reverse cassette deck P6-4.

Service Manual

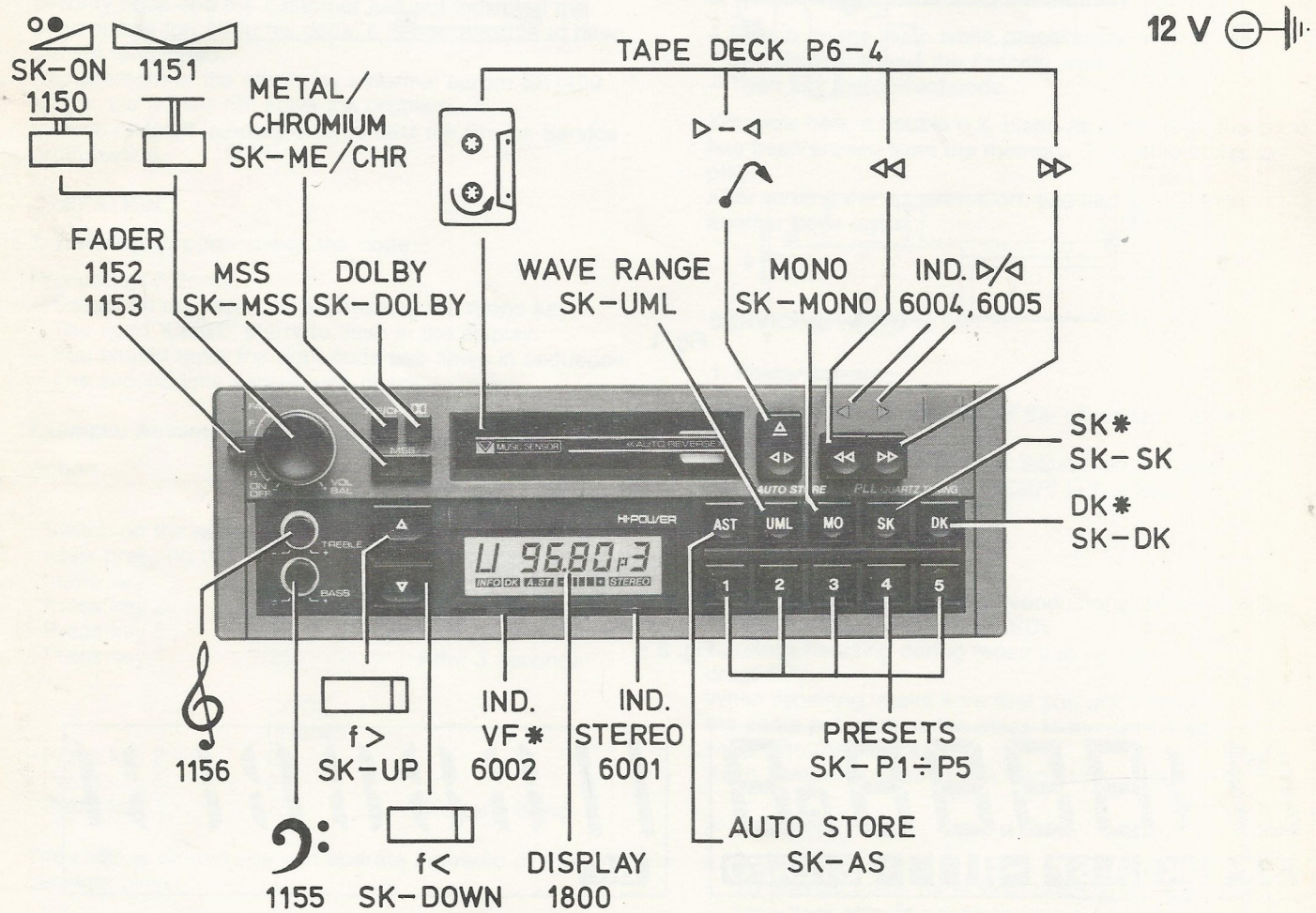

38 410 A7

Documentation Technique Service Dokumentation Documentazione di Servizio Huolte-Ohje Manual de Servicio Manual de Serviçio

Subject to modification

GB 4822 725 20811

Printed in The Netherlands

©Copyright reserved

PHILIPS

Published by
Service Consumer Electronics

TECHNICAL DATA

General

Power supply	: 14.4 V⎓
Memory battery	: 22EN9893
Remote control unit for automatic search	: 22EN9875
Dimensions (w×h×d)	: 180×51×149 mm

Radio

LW	: 150- 285 kHz
MW	: 525-1605 kHz
FM	: 87.5-108 MHz
IF-AM	: 468 kHz
IF-FM	: 10.7 MHz
Sensitivity for 26 dB S/R	: ⩽ 200 µV (LW) ⩽ 180 µV (MW) ⩽ 7 µV (FM)
Limitation α −3 dB	: 15 µV
10 dB crosstalk	: 140 µV

Cassette player

Number of tracks	: 2 × 2
Tape speed	: 4.76 cm/sec
Wow and flutter	: ⩽ 0.35%
Crosstalk	: ⩾ 30 dB
Dolby nr	: ⩾ 8 dB

Amplifier

Output power (D = 10%)	: 4 × 6.5 W ± 1 dB (4 × 4 Ω)
Loudness	: 8 dB at 100 Hz : 8 dB at 10 kHz
Bass	: +/−10 dB ± 2 dB at 100 Hz
Treble	: +/−10 dB ± 2 dB at 10 kHz

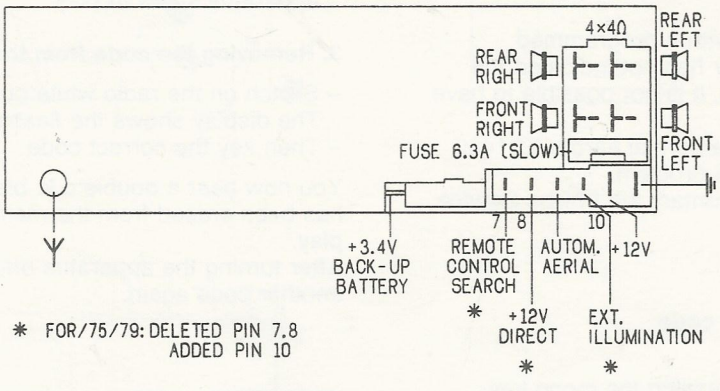

CONNECTOR BLOCK + PANEL

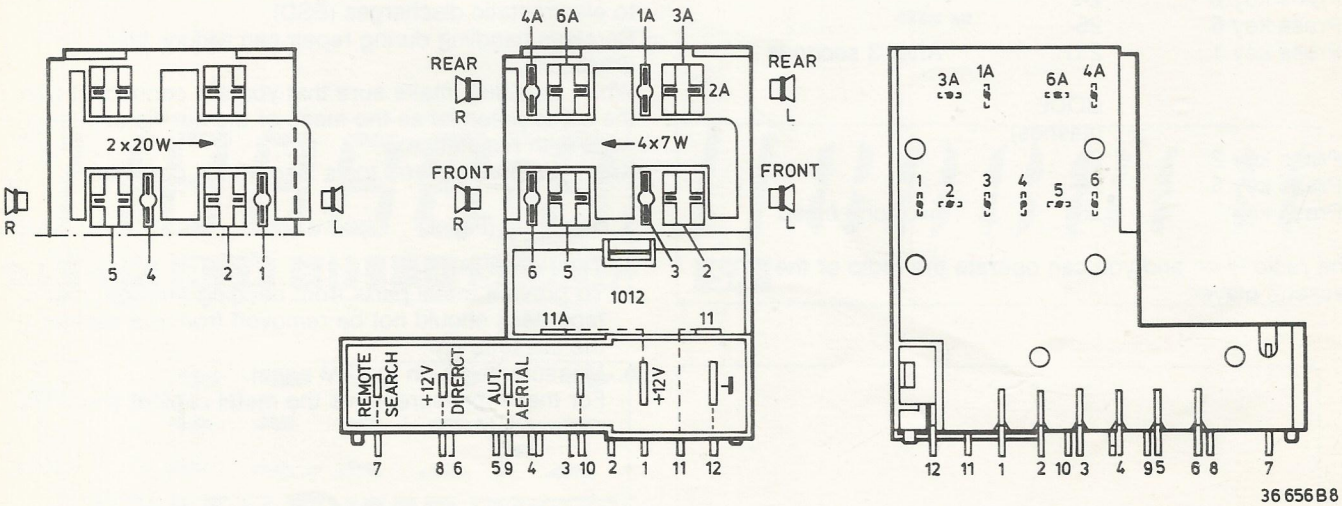

SECURITY CODE 22DC846/02

General

To reduce the possibility of theft, an electronic lock has been built into this car radio.
Upon delivery, the car radio is NOT encoded and thus functions as any other car radio, also in case of theft.
If the car radio DOES have a code, which consists of a three-figure number, you can also operate it directly. In case of repair or inspection of your car, it can happen that you have to enter your code first before you can operate your car radio.

In case of theft the radio will refuse all functions unless the correct code is entered.
However, if a wrong code number is keyed, the radio will refuse to accept it.
You will then hear an error bleep and the car radio will ask for the correct code number again by means of a flashing "CODE" in the display.
This operation can be repeated another two times.
After the third refusal to accept the wrong code, the radio is "dead" for 15 minutes.
After 15 minutes, a flashing "CODE" gives you once again the opportunity to enter the right code. If this code is wrong, you will have to wait another 15 minutes, etc.

Remark
If the set is offered for repair with a programmed security code and the customer has not indicated the code or has forgotten his code, it is not possible to have the set functioned.
Replacement of the earom by a normal earom ER1400 and/or the µC will not solve the problem.
In such cases it is advised to contact the Philips Service organization.

OPERATION

1. Entering (programming) the code

Proceed as follows:
- Switch on the radio, **while** pressing the mono key. The word "CODE" starts to flash in the display.
- You should enter the right code **two** times in sequence. The second time serves as a check.

Example: Assume that the code is 251

Action	Display shows	Remark
- Switch on the radio while pressing the mono key	CODE (flashes)	
- Press key 2	2--	
- Press key 5	25-	
- Press key 1	251	After 3 seconds
	CODE (flashes)	
- Press key 2	2--	
- Press key 5	25-	
- Press key 1	251	two-tone bleep

The radio is on and you can operate the radio or the cassette player.

Remark 1
If the second code is not the same as the first code, the radio will continue to ask for the right code until this code has been entered twice again or until you switch the radio off.

Remark 2
When the car radio has been coded, and it is switched on, the display briefly shows the word "CODE" as an indication that the security is operative.

2. Switching on the radio after repair or maintenance

- Switch on the radio. The display shows, flashing, the word CODE.
- Key the right code by pressing, in conformity with the above example (251), key 2, key 5, key 1.
- You now hear an o.k. bleep and the radio starts to play.

If you have keyed the wrong code (e.g. 252), you will hear an error bleep and the display shows the flashing word "CODE" again.
At the maximum three inputs are possible. After the third wrong input the radio is dead for 15 minutes.

- Now key the correct code (in our example 251) and the apparatus starts to play.

3. Removing the code from the memory

- Switch on the radio **while** pressing the mono key. The display shows the flashing word "CODE".
- Then key the correct code.

You now hear a double o.k. bleep as a sign that the code has been erased from the memory. The radio starts to play.
After turning the apparatus off, you can programme another code again.

SERVICING HINTS

1. Power supply

One of the supply voltages of the µC passes via the tape-deck.
During measurements and/or adjustments, if the tape-deck is not connected, C276 (+7) should be connected to +6 (e.g. C513).

2. ESD

All ICs and many other semi-conductors are susceptible to electrostatic discharges (ESD).
Careless handling during repair can reduce life drastically.
When repairing, make sure that you are connected with the same potential as the mass of the set via a wrist wrap with resistance.
Keep components and tools also at this potential.

3. Decasing (Fig. 1)

a. Tape-deck (A-D).
   To prevent metal parts from bending through, the tape-deck should not be removed from the cabinet by the cassette lift.
b. Measurements on the FM panel.
   For these measurements the metal cabinet should be removed. (A-K).

4. Service test programme

This programme consists of two parts: a. µC test and b. LCD test.

a. The test programme is called as follows:
Switch set off, depress keys P1 and P2 and switch set on while keeping P1 and P2 depressed. The µC now tests the RAM and some available µC instructions. If no errors are found during this test, a pattern acc. to Fig. 2 is shown on the display.
The test programme is ended by switching the set off.

b. This test programme is called as follows:
Switch set off, press keys P1 and P3 and switch the set on while keeping P1 and P3 depressed. If no faults occur, the display successively shows the patterns acc. to Fig. 3. The procedure is stopped when P3 is depressed. If P3 is released, the procedure will be continued.
The test programme can be ended by switching off the set.

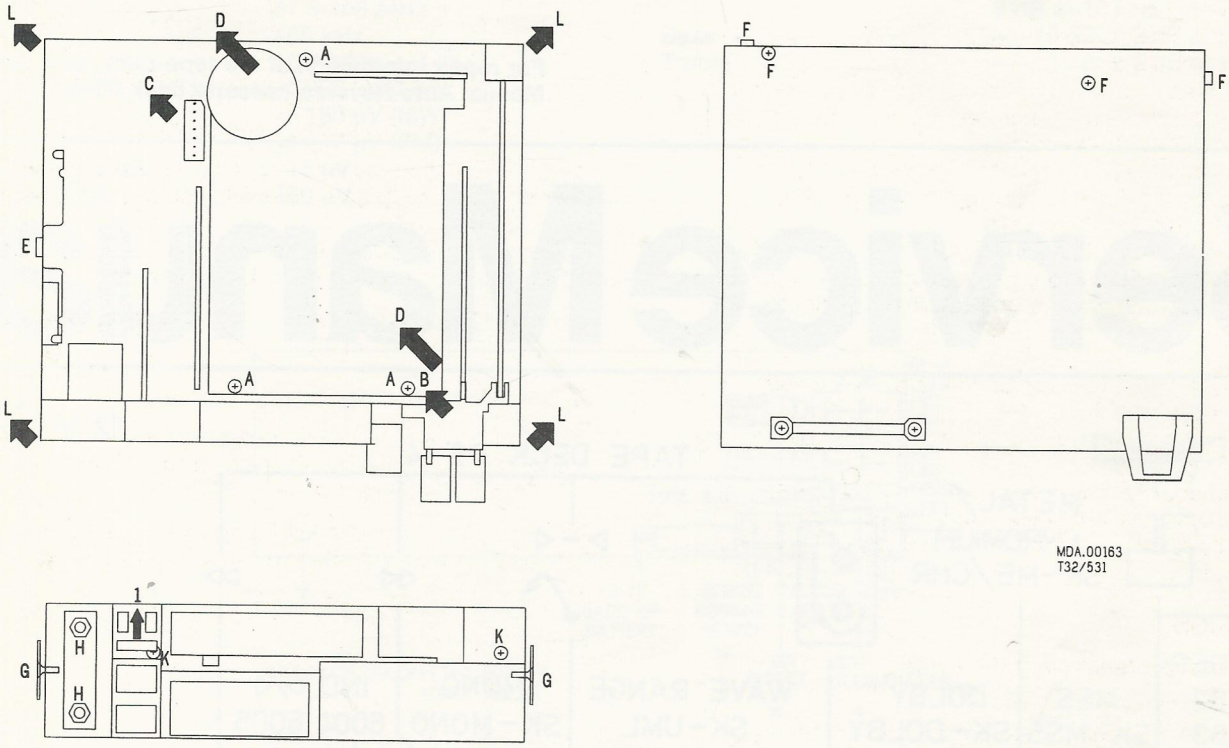

Fig. 1

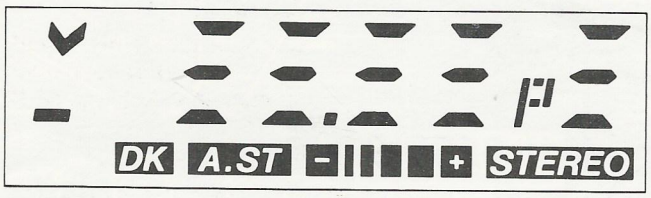

36 082 A12

Fig. 2

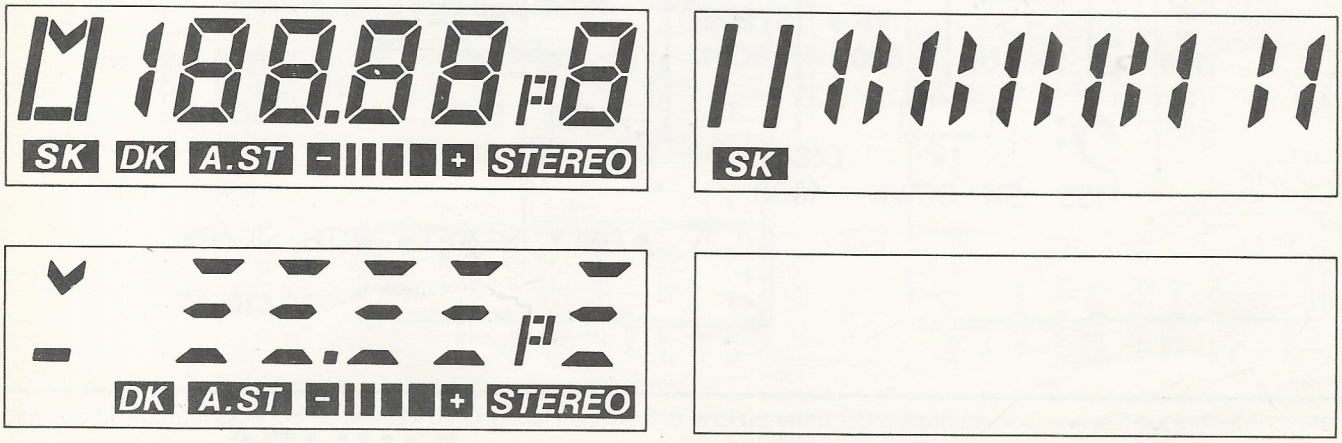

36 083 B12/A

Fig. 3

FRONT UNIT

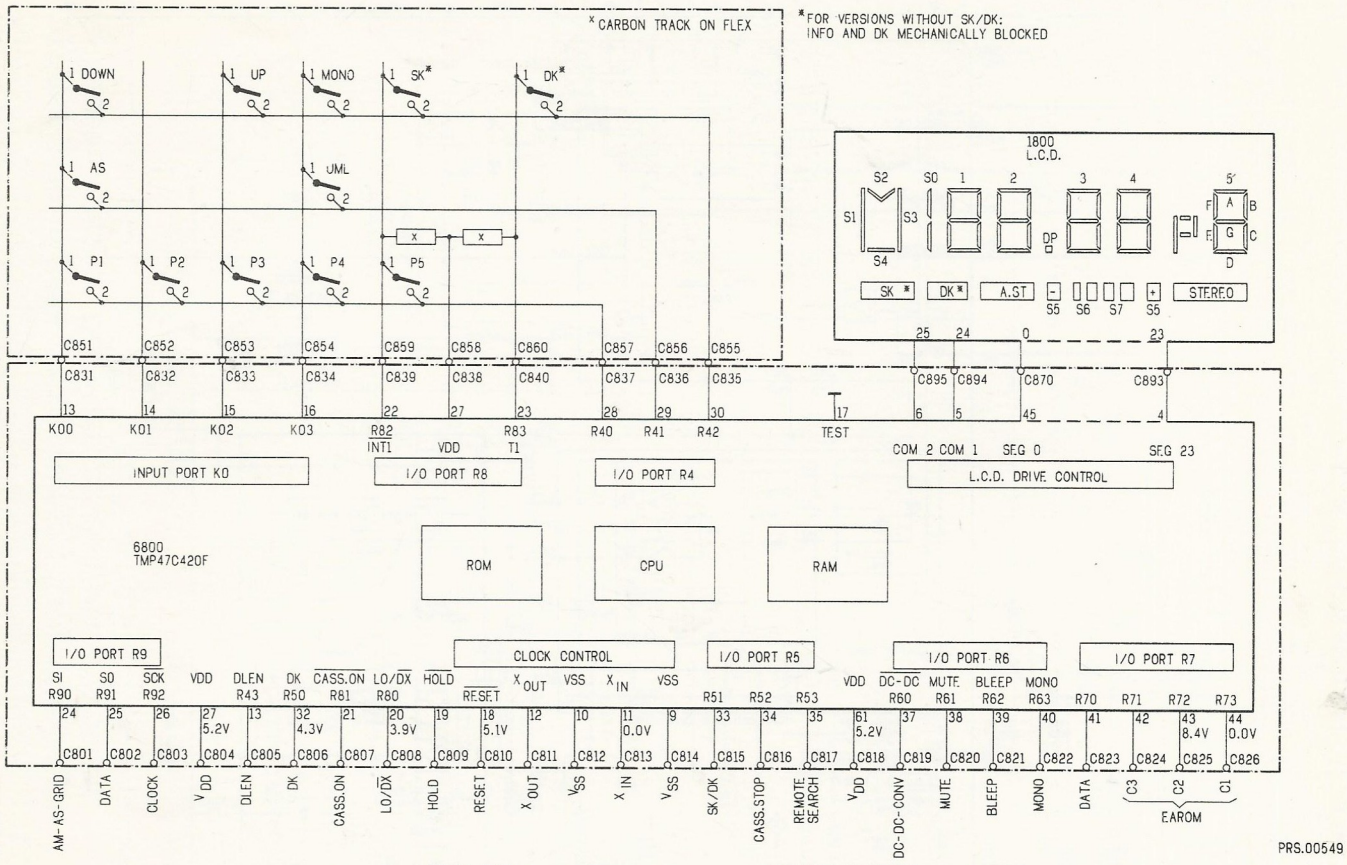

FRONT UNIT

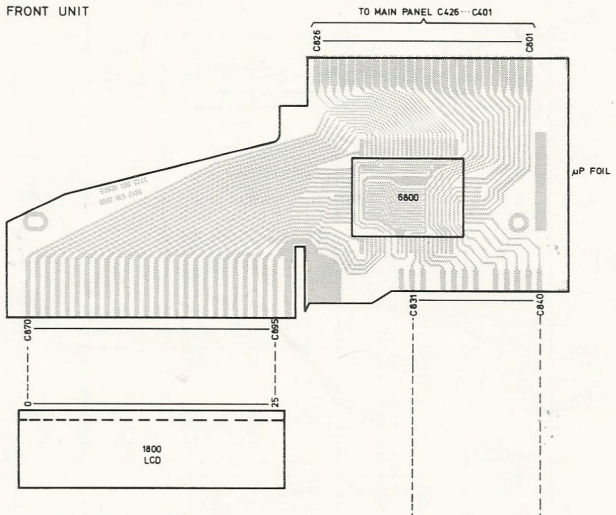

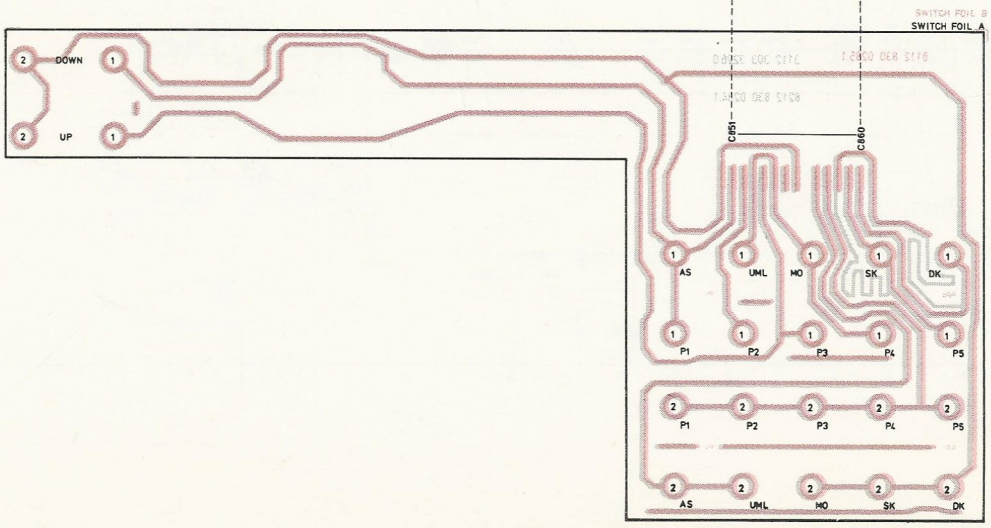

38 265 012

CHECKS

Check	SK				Setting of controls		
α —3 dB	FM	93 MHz : 1 mV 1000 Hz Δf 22,5 kHz	B	93.00 MHz		1 0 dB (≡ 775 mV)	
		93 MHz : 15 μV 1000 Hz Δf 22,5 kHz				1 - 3 dB	
SDS	FM stereo	93 MHz : 1 mV stereo signal	B	93.00 MHz	+	1 R : 0 dB 2 L : 0 dB	
		93 MHz : 140 μV stereo - R				2 L - 1 R = 10 dB	
IAC	FM	Vp τ T τ = 10 μs T = 300 μs Vp = 60 mV	C				10 25-50 μs
26 dB S/N	FM	93 MHz : 5 μV 1000 Hz Δf 22,5 kHz	B	93.00 MHz		1 2 V~ (0 dB)	
		93 MHz : 5 μV without mod.				1 - 26 dB	
	MW	648 kHz : 140 μV 1000 Hz 30% AM	A	93.00 MHz		1 2 V~ (0 dB)	
		648 kHz : 140 μV without mod.				1 - 26 dB	
	LW	175 kHz : 150 μV 1000 Hz 30% AM	A	93.00 MHz		1 2 V~ (0 dB)	
		175 kHz : 150 μV without mod.				1 - 26 dB	
Crosstalk	FM	93 MHz : 1 mV stereo signal	B	93.00 MHz	+	1 R : 0 dB 1 L : 0 dB	
		93 MHz : 1 mV stereo - R				1 L - 1 R ≥ 16 dB	
Aerial sensitivity	MW	648 kHz: 8 μV 1000 Hz 30% AM	A	93.00 MHz	max.	1 2 V~ (≡ 1 W)	
	LW	175 kHz : 16 μV 1000 Hz 30% AM	A	93.00 MHz	max.	1 2 V~ (≡ 1 W)	
SDK sensitivity *	FM + info	93 MHz : 25 μV 1000 Hz Δf 22,5 kHz +SK+BK+DK	B	93.00 MHz	min.	info led lights DK signal 1	

*Only for sets with SK/DK

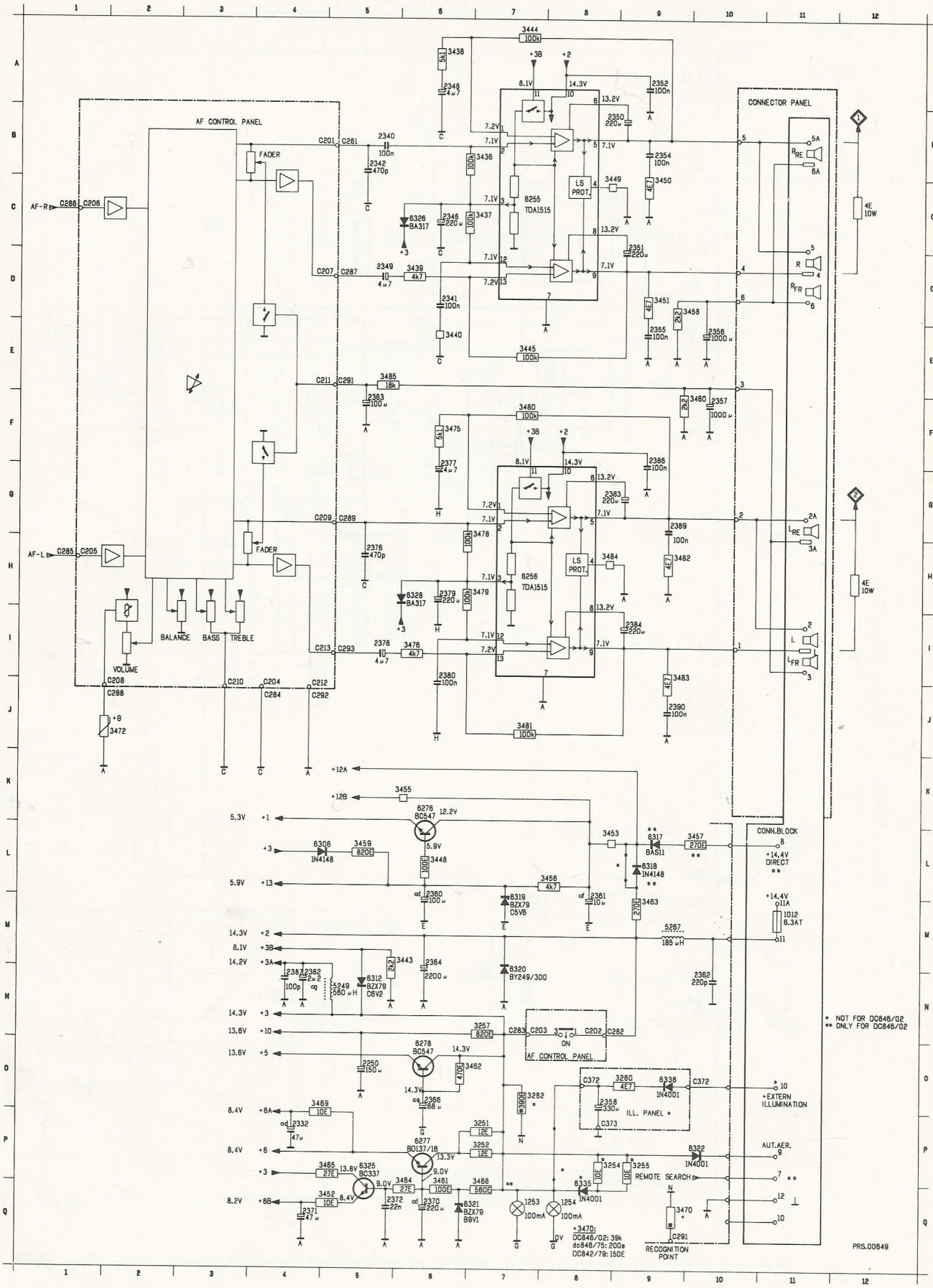
AF CONTROL PANEL
CONNECTOR PANEL
FADER
BALANCE
BASS
TREBLE
VOLUME
AF-R
AF-L
LS PROT.
TDA1515
CONN.BLOCK
+14,4V DIRECT
+EXTERN ILLUMINATION
AUT.AER.
REMOTE SEARCH
RECOGNITION POINT
ILL. PANEL
ON
* NOT FOR DC846/02
** ONLY FOR DC846/02
PRS.00649

CS 677

1050	E	1	C2098	C	2
1053	B	1	C2104	C	2
1054	C	1	C2105	D	2
1057	E	2	C2106	D	2
2051	B	2	C2107	D	2
2055	A	1	C2109	B	2
2057	A	1	C2110	D	2
2062	B	1	C2111	D	2
2063	B	2	C2112	D	2
2075	C	1	C2115	D	2
2080	E	1	C2117	C	2
2083	E	2	C2119	A	2
2086	E	1	J3078	B	2
2087	E	1	J3117	A	2
2095	C	1	R3051	B	2
2099	C	2	R3052	A	2
2108	D	2	R3053	B	2
2114	D	2	R3054	A	1
2116	D	2	R3055	B	1
2120	A	2	R3056	A	1
3050	A	1	R3059	A	1
3058	C	2	R3060	A	1
3067	C	1	R3061	B	1
3069	B	1	R3062	B	1
3079	D	1	R3063	B	1
3087	D	2	R3064	B	1
3088	C	2	R3065	B	1
3092	C	1	R3066	B	1
3093	C	1	R3068	B	1
5050	B	2	R3070	B	1
5052	B	2	R3071	B	1
5053	A	1	R3072	B	1
5054	B	1	R3074	C	1
5055	B	1	R3075	C	1
5057	D	1	R3076	C	1
5058	D	1	R3077	D	1
5059	B	1	R3080	D	1
5060	E	2	R3081	E	1
5063	A	2	R3082	D	1
5064	B	2	R3083	D	1
6050	B	1	R3084	E	2
6051	C	1	R3085	E	1
6052	D	2	R3086	C	2
6055	B	1	R3091	C	2
6057	A	1	R3094	C	1
6058	B	2	R3095	C	1
6059	A	1	R3096	A	2
6060	B	1	R3097	A	2
6062	B	2	R3104	D	1
6063	B	1	R3105	D	1
6064	E	2	R3106	D	1
6065	D	1	R3108	D	2
6066	D	1	R3109	D	1
6068	C	2	R3110	E	2
6069	C	2	R3111	E	2
6071	D	2	R3113	D	2
6072	D	1	R3114	D	2
6073	A	2	R3115	D	2
6074	A	2	R3116	D	2
6075	C	1			
C2050	B	2			
C2052	B	2			
C2053	B	2			
C2054	B	2			
C2058	B	1			
C2059	A	1			
C2060	B	2			
C2061	A	1			
C2064	C	1			
C2065	B	2			
C2066	B	1			
C2067	C	1			
C2068	B	1			
C2069	C	2			
C2070	C	1			
C2071	C	1			
C2074	C	1			
C2077	D	1			
C2078	E	1			
C2079	E	1			
C2081	D	1			
C2082	E	2			
C2090	C	2			
C2093	C	2			
C2094	C	1			
C2096	C	2			
C2097	C	2			

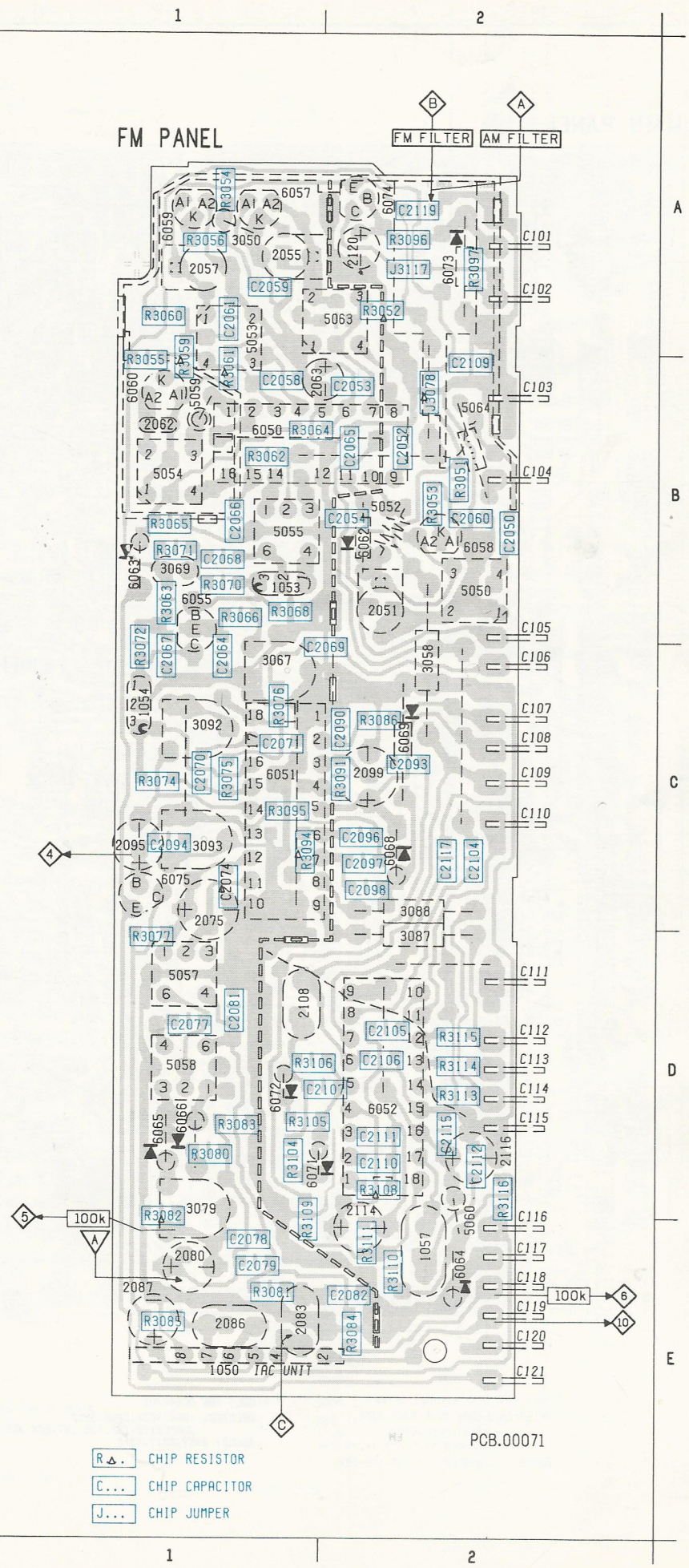

6050

1=0.0V 2.2V
2=0.1V 2.6V
3.4=0.0V 4.1V
5.12=⏚
6=0.0V
7.8=0.0V 4.7V
9=0.0V 0.8V
10.11=0.0V
13=0.0V 9.3V
14=0.0V 9.3V
15=0.0V 9.3V
16=0.0V 2.2V

6051

1.10=⏚
2=8.3V
3=6.3V 6.4V
4=6.1V 6.2V
5=0.6V
6=4.0V
7=4.0V
13=1.1V 0.3V
14=1.1V 0.3V
15=2.6V
16=2.6V
17=2.6V
18=2.6V

6052

1=0.0V
2=2.9V
3=2.7V
4=5.0V
5=1.2V
6=0.5...8.2V
1.7...8.4V
7=13.6V
8=3.0V
9.16=5.0V
10=3.0V
11=2.7...3.4V
15=⏚
17=1.2V
18=0.7V

6055

B=0.0V 1.5V
E=0.0V 0.8V
C=0.0V 7.6V

6074

B=0.0V 10.0V
E=0.0V 9.3V
C=14.2V 13.6V

6075

B= 0.9V
E= 0.3V
C= 8.2V

1150	J 4	2151	G 7	2158	G 5	2165	E 9	2173	A 4	3152	G 6	3159	F 2	3166	A 8	3173	D 2	3180	I 5	3187	E 8	3196	J10	6154	A10
1151	H 5	2152	A 6	2159	G 4	2167	F10	2174	H 9	3153	G 5	3160	C 8	3167	G 8	3174	G10	3181	F10	3188	B 9	3197	J10	6155	D10
1152	B 9	2153	F 6	2160	J 3	2168	C 2	2176	B 9	3154	G 4	3161	F 8	3168	H 7	3175	I 5	3182	C 8	3190	B10	3198	J 5	6158	J 5
1153	E 9	2155	F 2	2161	A 4	2169	F 2	2177	E 9	3155	J 4	3162	B 8	3169	I10	3176	D 2	3183	A 8	3191	E10	3289	I 4	6160	C 2
1155	H 5	2155	C 3	2162	C 8	2170	J 5	3149	A 5	3156	J 4	3163	E 8	3170	H 5	3177	G 2	3184	G 8	3193	H10	6150	C 5	6161	F 2
1156	H 7	2156	I 9	2163	G 8	2171	F 3	3150	C 1	3157	F 3	3164	B10	3171	I 6	3178	B 2	3185	D 8	3194	H10	6152	B10	6164	I10
2150	A 7	2157	G 6	2164	B 9	2172	C 3	3151	F 1	3158	C 2	3165	E10	3172	I 6	3179	E 2	3186	E 8	3195	J10	6153	E10	6165	G 9

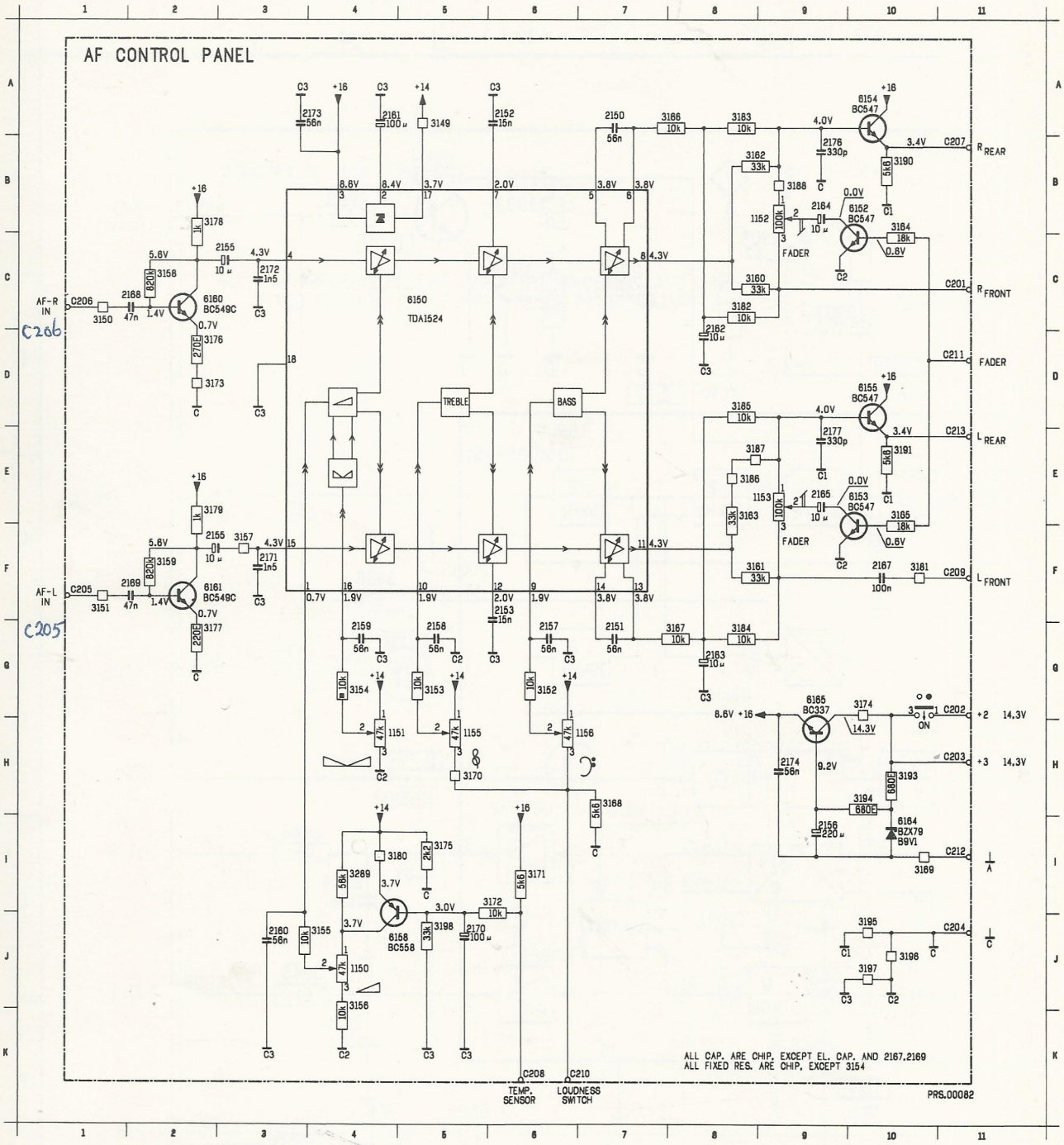

AF CONTROL PANEL

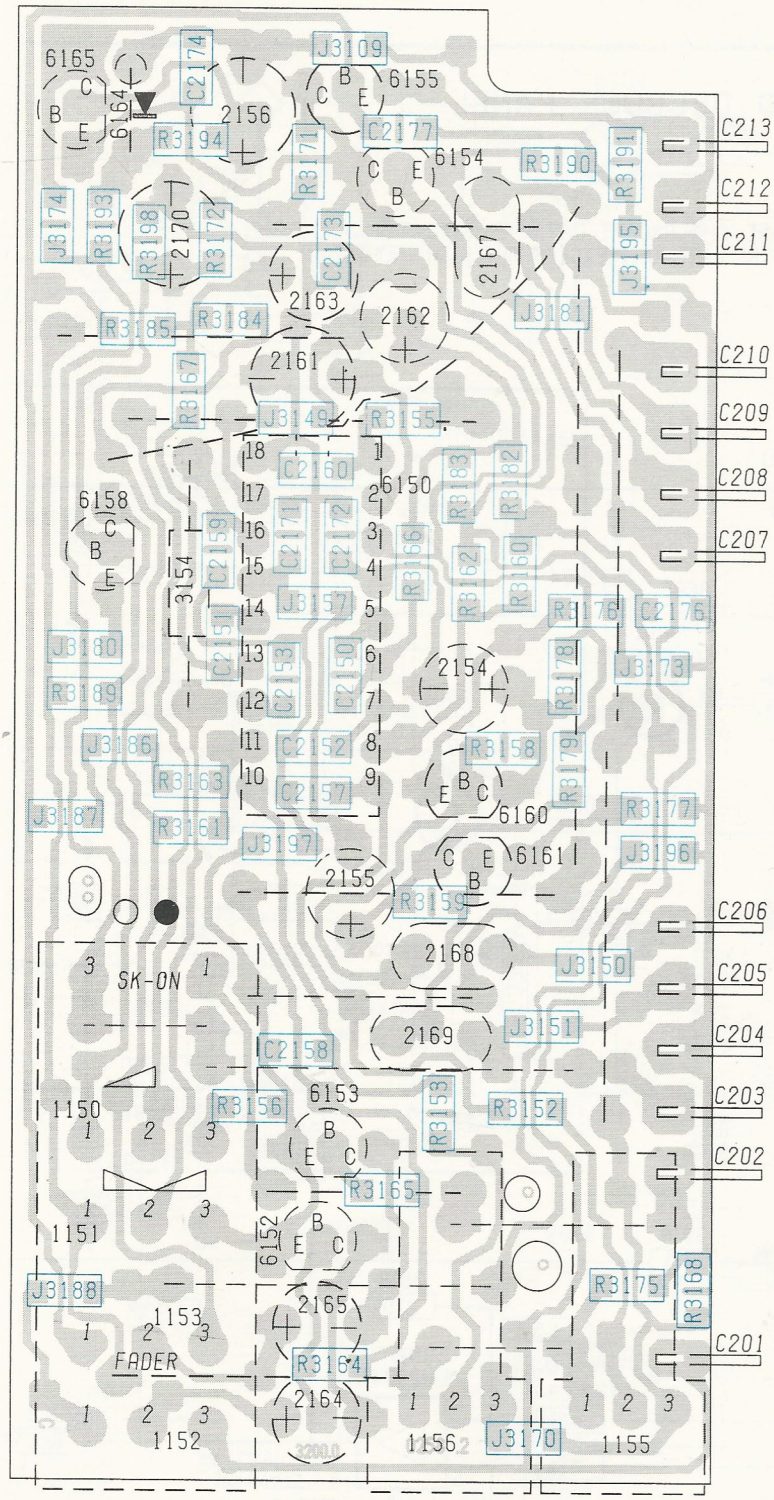

6150

1=	0.7V
2=	8.4V
3=	8.6V
4=	4.3V
5=	3.8V
6=	3.8V
7=	2.0V
8=	4.3V
9=	1.9V
10=	1.9V
11=	4.3V
12=	2.0V
13=	3.8V
14=	3.8V
15=	4.3V
16=	1.9V
17=	3.7V
18=	0.0V

6152,6153

E=	0.0V
B=	0.6V
C=	0.0V

6154,6155

E=	3.4V
B=	4.0V
C=	8.6V

6158

E=	3.7V
B=	3.0V
C=	3.7V

6160,6161

E=	0.7V
B=	1.4V
C=	5.6V

6165

E=	8.6V
B=	9.2V
C=	14.3V

1150	C	1
1151	D	1
1152	D	1
1153	D	1
1155	D	2
1156	D	2
2154	B	2
2155	C	1
2156	A	1
2161	B	1
2162	B	2
2163	A	1
2164	D	1
2165	D	2
2167	A	2
2168	C	2
2169	C	2
2170	A	1
3154	B	1
6150	B	2
6152	D	2
6153	C	1
6154	A	2
6155	A	2
6158	B	1
6160	B	2
6161	C	2
6164	A	1
6165	A	1

R.... CHIP RESISTOR

C.... CHIP CAPACITOR

J... CHIP JUMPER

PCB.00011

STEREO DECODER PANEL

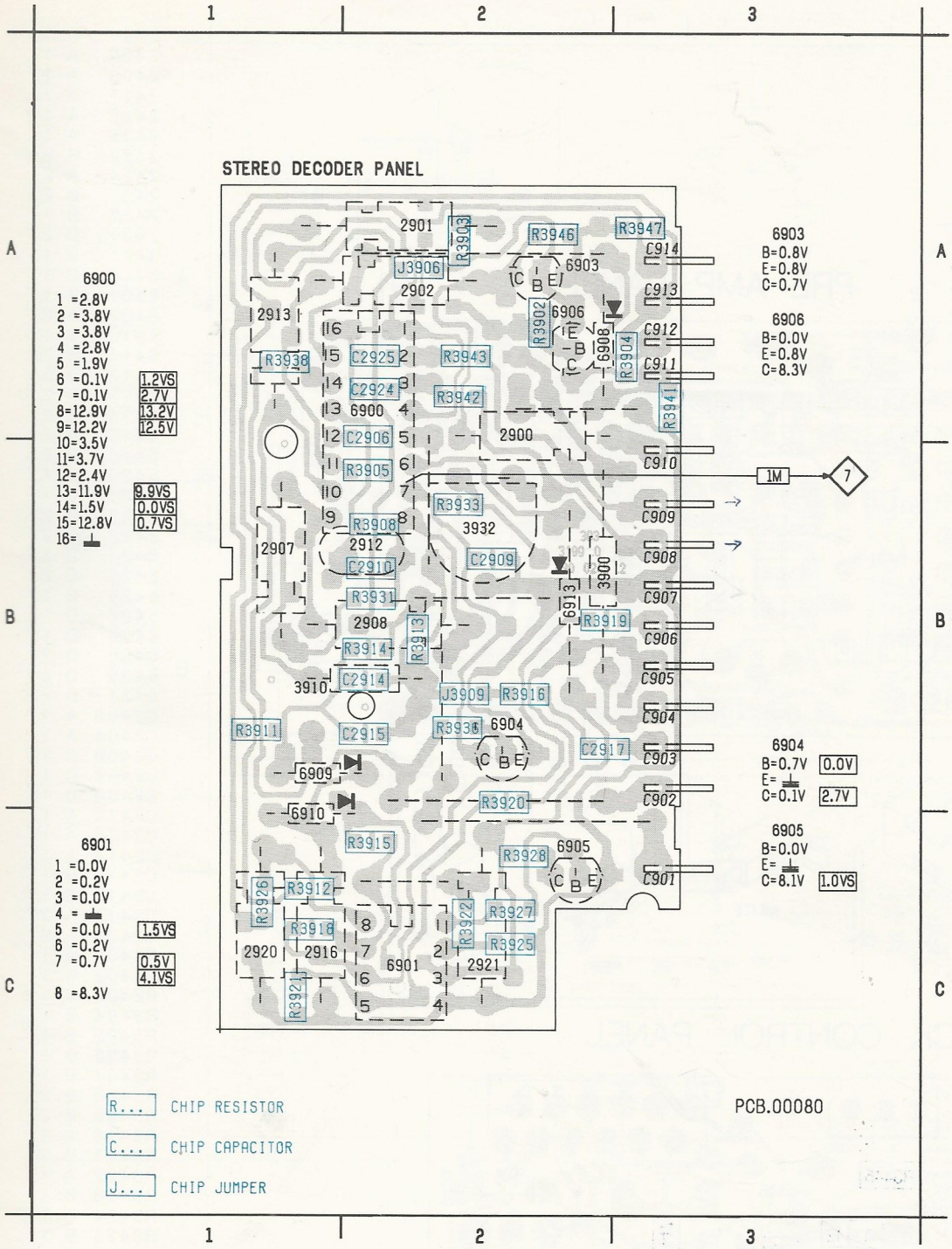

2900	A	2	R3943	A	2
2901	A	2	R3946	A	2
2902	A	2	R3947	A	3
2907	B	1			
2908	B	2			
2912	B	2			
2913	A	1			
2916	C	1			
2920	C	1			
2921	C	2			
3900	B	3			
3910	B	1			
3932	B	2			
6900	A	2			
6901	C	2			
6903	A	2			
6904	B	2			
6905	C	2			
6906	A	2			
6908	A	3			
6909	B	1			
6910	B	1			
6913	B	2			
C2906	A	2			
C2909	B	2			
C2910	B	2			
C2914	B	2			
C2915	B	2			
C2917	B	2			
C2924	A	2			
C2925	A	2			
J3906	A	2			
J3909	B	2			
R3902	A	2			
R3903	A	2			
R3904	A	3			
R3905	B	2			
R3908	B	2			
R3911	B	1			
R3912	C	1			
R3913	B	2			
R3914	B	2			
R3915	C	2			
R3916	B	2			
R3918	C	1			
R3919	B	2			
R3920	B	2			
R3921	C	1			
R3922	C	2			
R3925	C	2			
R3926	C	1			
R3927	C	2			
R3928	C	2			
R3931	B	2			
R3933	B	2			
R3936	B	2			
R3938	A	1			
R3941	A	3			
R3942	A	2			

ILLUM. PANEL

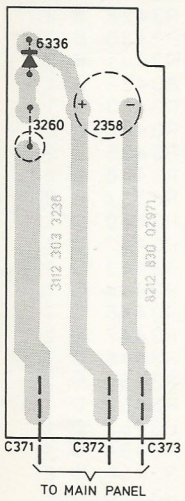

38 302 A12

POST STAMP PANEL

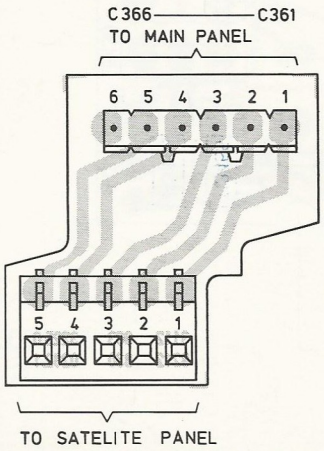

38 262 A12

SATELITE PANEL

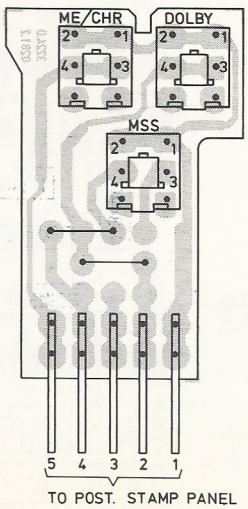

38 411 A7

2950	D 1	2953	C 5	2957	F 5	2960	F 7	3950	D 2	3953	B 5	3956	C 6	3959	D 5	3962	E 7	3965	F 6	5950	B 3
2951	B 3	2954	B 7	2958	E 6	2961	B 9	3951	B 2	3954	B 6	3957	C 7	3960	D 6	3963	E 5	3966	F 7	6950	B10
2952	B 5	2955	C 7	2959	E 7	2962	G 9	3952	B 5	3955	B 7	3958	C 6	3961	E 5	3964	E 6	3967	D 5	6951	C 6

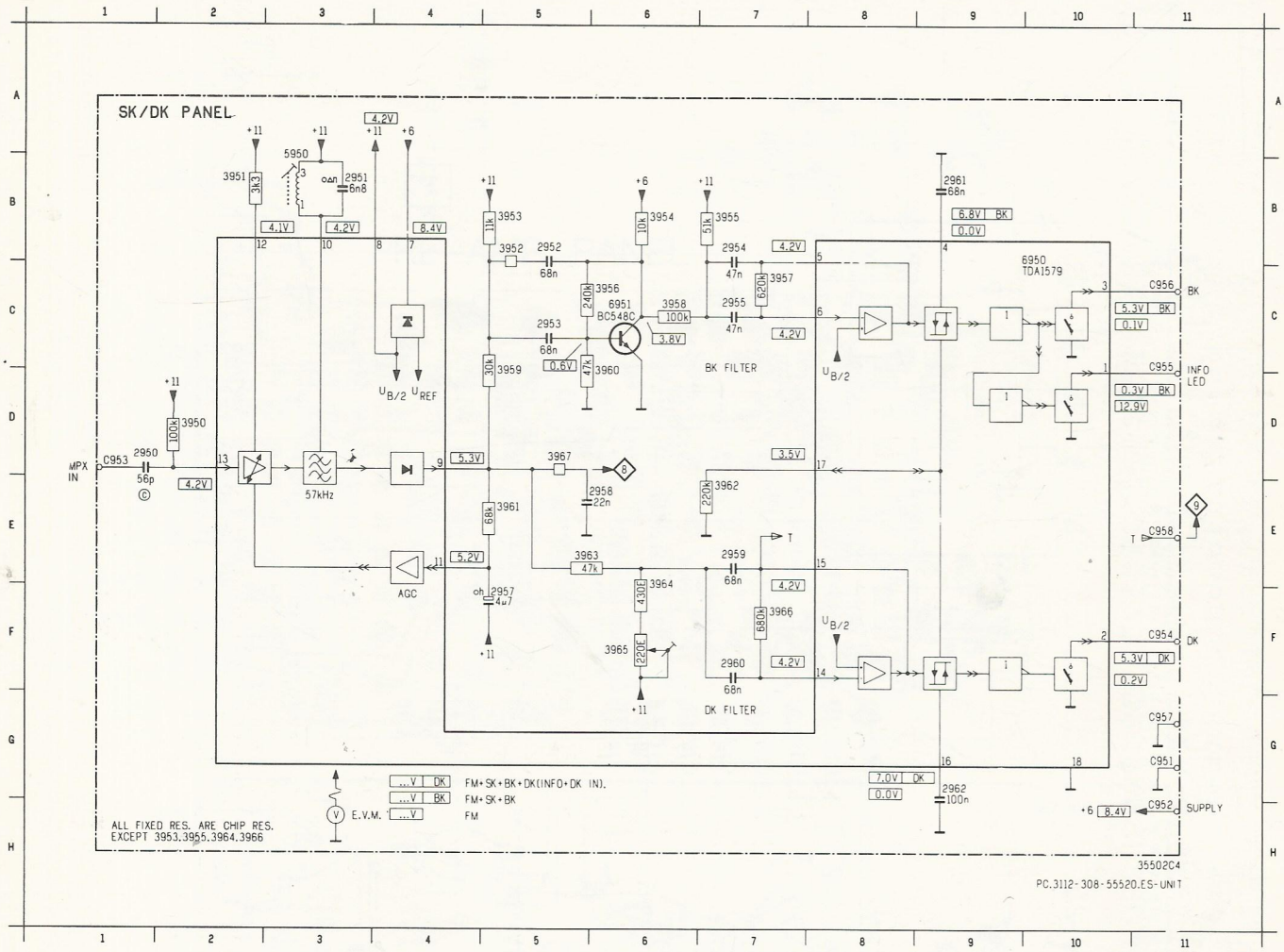

2950	A 1
2951	A 3
2952	A 1
2953	A 1
2954	A 2
2955	A 2
2957	A 3
2958	A 3
2959	A 2
2960	A 3
2961	A 1
2962	A 2
3950	A 2
3951	A 2
3952	A 2
3953	A 3
3954	A 1
3955	A 2
3956	A 1
3957	A 2
3958	A 1
3959	A 3
3960	A 1
3961	A 3
3962	A 2
3963	A 3
3964	A 3
3965	A 3
3966	A 2
3967	A 3
5950	A 3
6950	A 2
6951	A 1

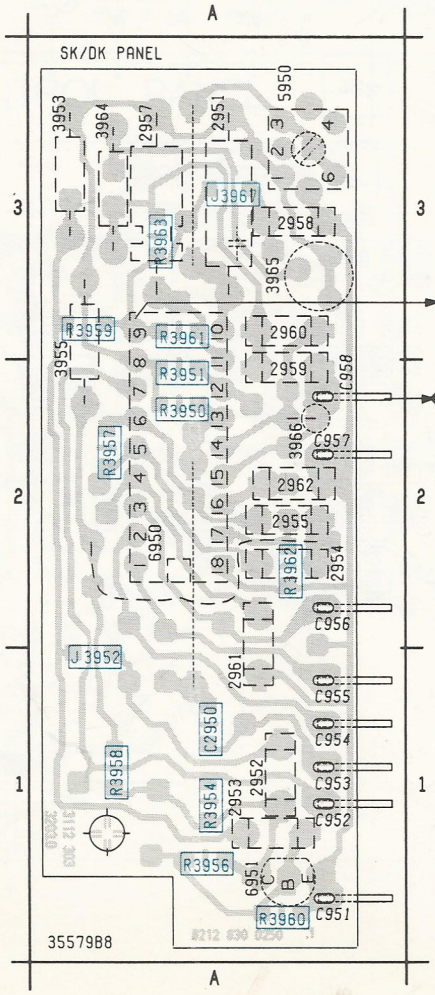

6950

1=	12.9V	0.3V BK
2=	0.2V	5.3V DK
3=	0.1V	5.3V DK
4=	0.0V	6.8V BK
5=	4.2V	
6=	4.2V	
7=	8.4V	
8=	4.2V	
9=	5.3V	
10=	4.2V	
11=	5.2V	
12=	4.1V	
13=	4.2V	
14=	4.2V	
15=	4.2V	
16=	0.0V	7.0V DK
17=	3.5V	
18=	0.0V	

6951

B=	0.6V
E=	0.0V
C=	3.8V

CS 680

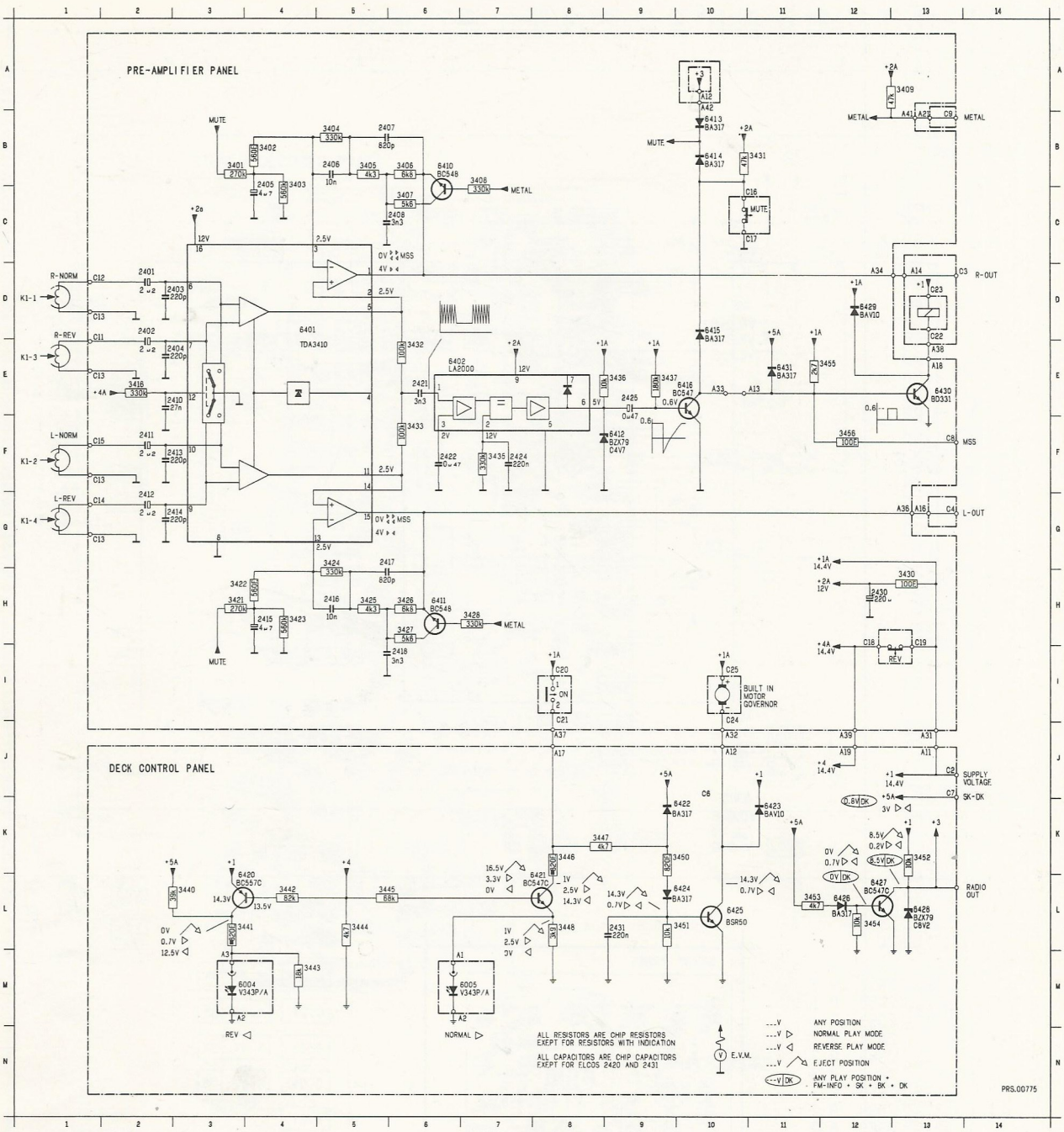

2401	D	2
2402	D	2
2403	D	3
2404	E	3
2405	B	4
2406	B	5
2407	B	5
2408	C	6
2410	E	3
2411	F	2
2412	D	2
2413	F	3
2414	G	3
2415	H	4
2416	H	5
2417	D	5
2418	I	6
2421	E	6
2422	F	6
2424	F	7
2425	E	9
2430	H	12
2431	L	9
3401	B	3
3402	B	4
3403	B	4
3404	B	5
3405	B	5
3406	B	6
3407	C	6
3408	B	7
3409	H	13
3416	E	2
3421	H	3
3422	H	3
3423	H	4
3424	D	5
3425	H	5
3426	H	6
3427	H	6
3428	H	7
3430	H	13
3431	B	11
3432	E	6
3433	F	6
3435	F	7
3436	E	9
3437	E	9
3440	L	3
3441	L	4
3442	L	4
3443	M	4
3444	L	5
3445	L	5
3446	K	8
3447	K	8
3448	L	8
3450	K	10
3452	K	13
3453	L	11
3454	L	12
3455	E	12
3456	F	12
6401	D	4
6402	E	6
6410	B	6
6411	H	6
6412	F	9
6413	B	10
6414	B	10
6415	D	10
6416	E	10
6420	L	4
6421	L	8
6423	K	11
6425	L	10
6426	L	12
6427	L	12
6428	L	13
6429	D	12
6430	E	13
6431	E	11
K1-1	D	1
K1-2	F	1
K1-3	E	1
K1-4	G	1

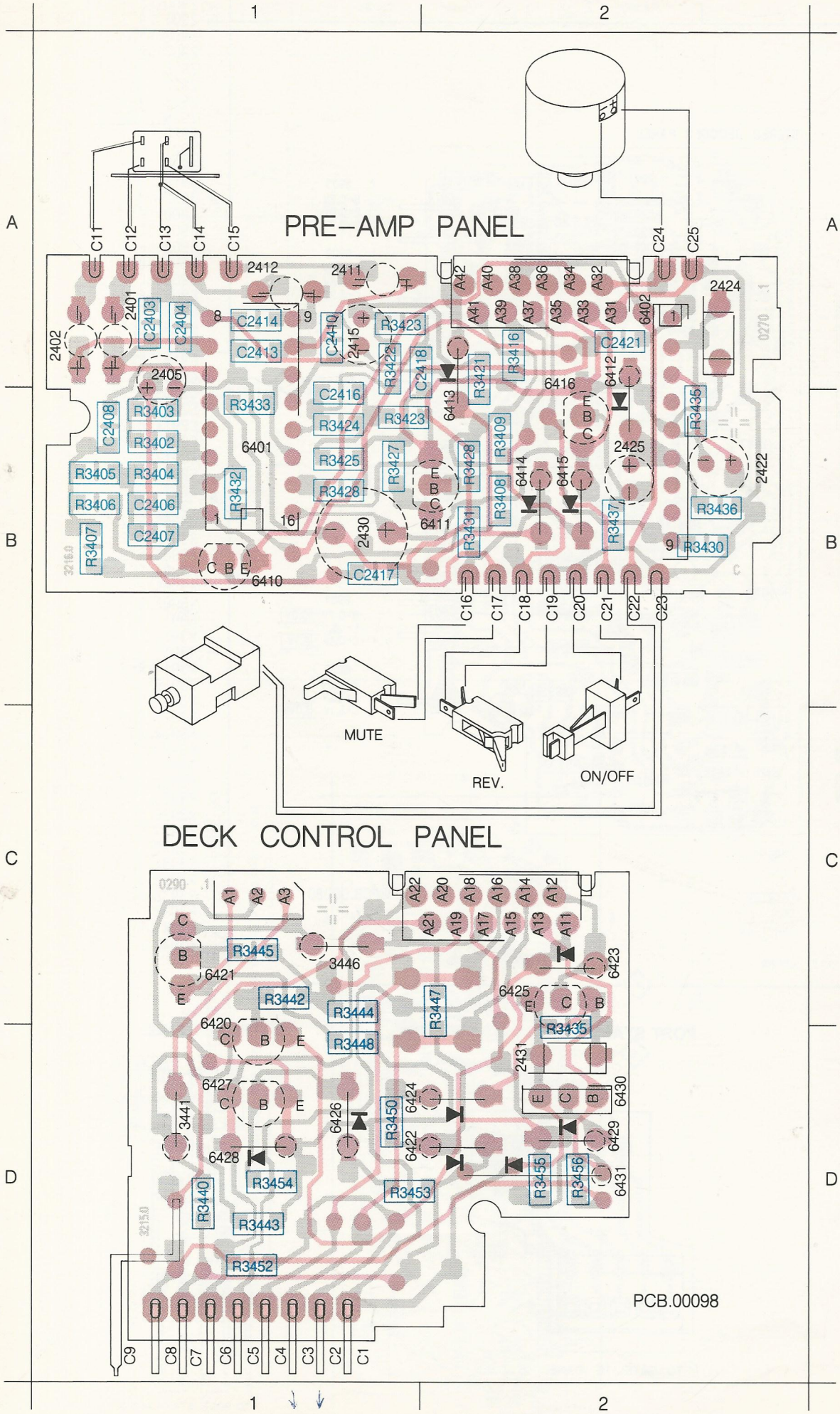

2401	A	1
2402	A	1
2405	A	1
2411	A	1
2412	A	1
2415	A	1
2422	B	2
2424	A	2
2425	B	2
2430	B	1
2431	D	2
3441	D	1
3446	C	1
6401	B	1
6402	A	2
6410	B	1
6411	B	2
6412	B	2
6413	B	2
6414	B	2
6415	B	2
6416	B	2
6420	D	1
6421	C	1
6422	D	2
6423	C	2
6424	D	2
6425	C	2
6426	D	1
6427	D	1
6428	D	1
6429	D	2
6430	D	2
6431	D	2
C2403	A	1
C2404	A	1
C2406	B	1
C2407	B	1
C2408	B	1
C2410	A	1
C2413	A	1
C2414	A	1
C2416	B	1
C2417	B	1
C2418	A	2
C2421	A	2
R3401	A	1
R3402	B	1
R3403	B	1
R3404	B	1
R3405	B	1
R3406	B	1
R3407	B	1
R3408	B	2
R3409	B	2
R3416	A	2
R3421	B	2
R3422	A	1
R3423	B	1
R3424	B	1
R3425	B	1
R3427	B	1
R3428	B	1
R3428	B	2
R3430	B	2
R3431	B	2
R3432	B	1
R3433	B	1
R3435	D	2
R3435	B	2
R3436	B	2
R3437	B	2
R3440	D	1
R3442	C	1
R3443	D	1
R3444	D	1
R3445	C	1
R3447	D	2
R3448	D	1
R3450	D	1
R3452	D	1
R3453	D	1
R3454	D	1
R3455	D	2
R3456	D	2

MAIN PANEL

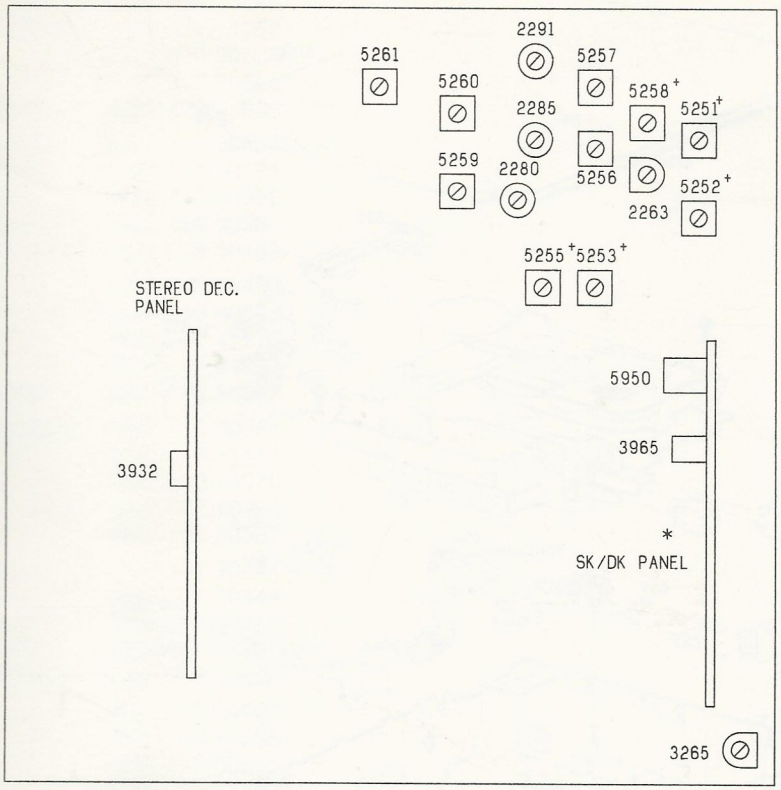

FM PANEL

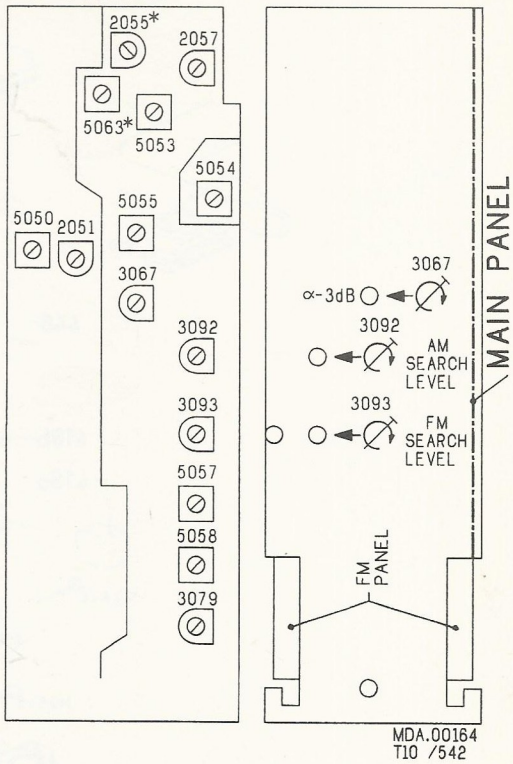

*ONLY IN SETS WITH SK/DK

+ADJUSTMENT CAN BE OMITTED

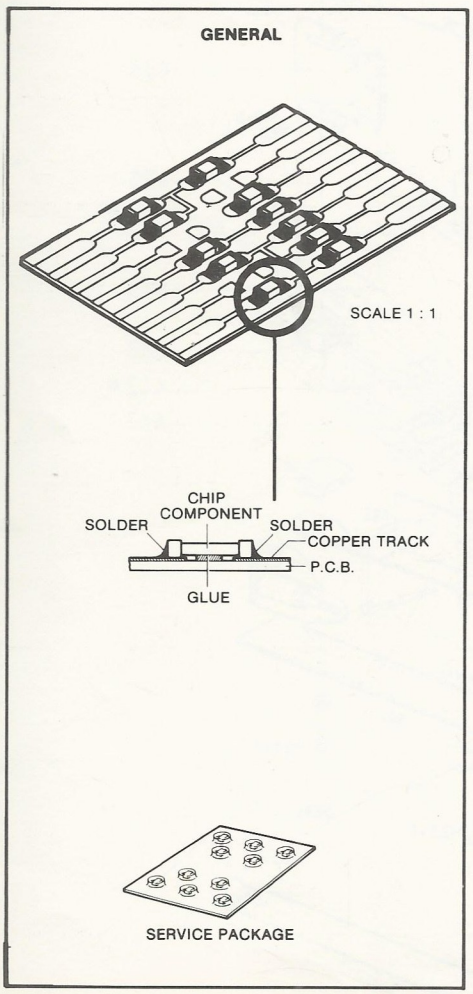

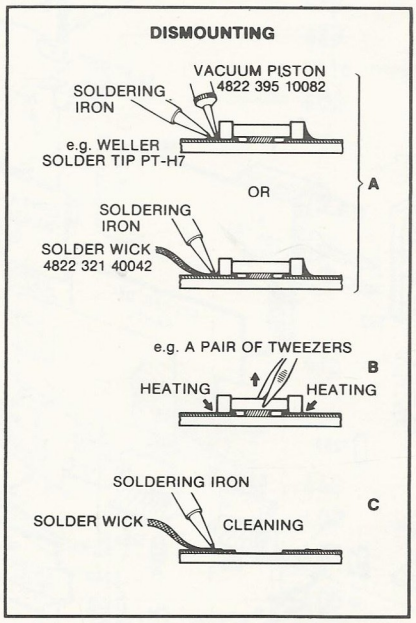

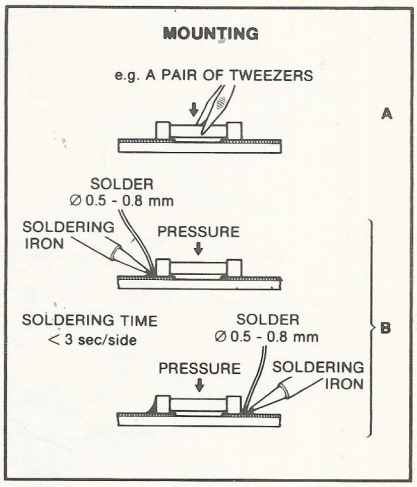

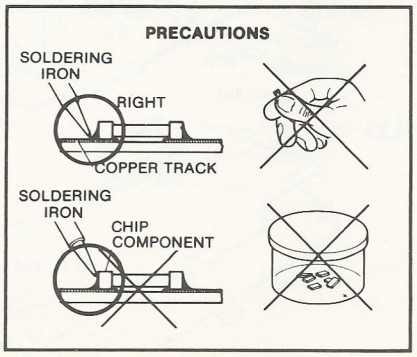

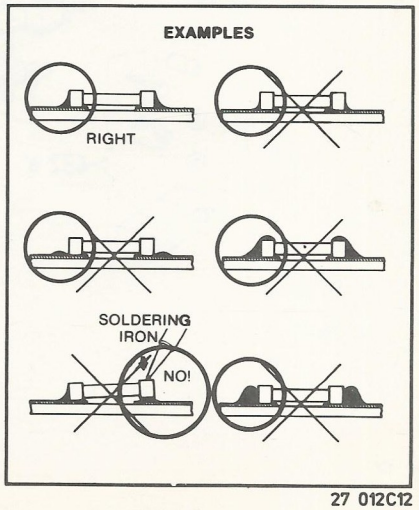

27 012C12

ADJUSTMENTS

Adjustment	SK						
FM oscillator	FM	no signal		100 MHz	5054	③ 4,65 V⎓	
FM-IF+detector	FM	93 MHz wobbel 50 Hz, △f=300 kHz ▽A ○	Ⓑ	93 MHz	5057 5055		⑤ MAX.
					5058 3079		⑥ ▽A ●
FM-RF	FM	88 MHz 1 kHz, △f=22,5 kHz	Ⓑ	88 MHz	5050	① max. ~	
		88 MHz 1 kHz, △f=22,5 kHz		88 MHz	5063* 5053		
		100 MHz 1 kHz, △f=22,5 kHz		100 MHz	2051*		
		100 MHz 1 kHz, △f=22,5 kHz		100 MHz	2057 2055*		
α –3 dB	FM	93 MHz, 15 µV 1 kHz,△f=22,5 kHz	Ⓑ	93 MHz	3067	① –3 dB	
FM search level	FM	93 MHz, 180 µV	Ⓑ	93 MHz	3093	④ 4,63 V⎓	
VCO stereo decoder	FM	no signal			3932	⑦ 76 ± 0,3 kHz	
SDS (10 dB crosstalk)	FM stereo	93 MHz, 140 µV stereo –R	Ⓑ	93 MHz	3265	② L – ① R = 10 dB	
MW oscillator	MW	no signal		525 kHz	5259	③ 0,5 V⎓	
				1605 kHz	2280	③ 8,0 V⎓	
LW oscillator	LW	no signal		285 kHz	2285	③ 8,0 V⎓	
				150 kHz	5260	③ 0,5 V⎓	
AM-IF	MW	525 kHz 1 kHz, AM=30%	Ⓐ	525 kHz	5261	① max. ~	
MW-RF	MW	648 kHz 1 kHz, AM=30%	Ⓐ	648 kHz	5257	① max. ~	
		1503 kHz 1 kHz, AM=30%		1503 kHz	2263		
LW-RF	LW	175 kHz 1 kHz, AM=30%	Ⓐ	175 kHz	5256	① max. ~	
		250 kHz 1 kHz, AM=30%		250 kHz	2291		
AM search level	MW	648 kHz, 120 µV	Ⓐ	648 kHz	3092	④ 1,38 V⎓	
* SDK decoder SK	FM SK	HF+SK+BK	Ⓑ		5950	⑧ max. ~	
* SDK decoder DK		HF+SK+BK+DK			3965	⑨ max. ~	
Dolby level L		SBC419* 315 Hz-0 dB *4822 397 30069			3388	⑫ 387.5 mV ± 1 dB	
Dolby level R					3387	⑪ 387.5 mV ± 1 dB	

*Only for sets with SK/DK. 1) Detune C2055, C2057 to $\frac{1}{3}$ C max. Adjust 5050 to max.

2051	10 pF-3 pF	4822 125 50281
2055	10 pF-3 pF	4822 125 50281
2057	10 pF-3 pF	4822 125 50281
2062	10 pF 2% 100 V TC N750	4822 122 32138
2063	1 µF 50 V	4822 124 20927
2075	47 µF 20% 10 V	4822 124 21483
2080	1 µF 50% 63 V	4822 124 40242
2083	100 nF 10% 63 V	4822 121 42094
2086	220 nF 20% 63 V	4822 121 41789
2087	47 µF 50% 10 V	4822 124 40433
2095	1 µF 50 V	4822 124 21486
2099	4,7 µF 50% 63 V	4822 124 40246
2108	150 nF 10% 63 V	4822 121 41873
2114	47 µF 50% 10 V	4822 124 40433
2116	47 µF 50% 10 V	4822 124 40433
2120	10 µF 16 V	4822 124 21108
2154	10 µF 50% 50 V	4822 124 40435
2155	10 µF 50% 50 V	4822 124 40435
2156	220 µF 50% 10 V	4822 124 40181
2161	100 µF 50% 10 V	4822 124 40178
2162	10 µF 50% 50 V	4822 124 40435
2163	10 µF 50% 50 V	4822 124 40435
2164	10 µF 50% 50 V	4822 124 40435
2165	10 µF 50% 50 V	4822 124 40435
2167	100 nF 10% 63 V	4822 121 42094
2168	47 nF 10% 63 V	4822 121 42237
2169	47 nF 10% 63 V	4822 121 42237
2170	100 µF 50% 10 V	4822 124 40178
2250	150 µF 20% 16 V	4822 124 21454
2257	4,7 µF 50% 63 V	4822 124 40246
2262	33 nF 20% 100 V	4822 121 42457
2263	20 pF-2 pF	4822 125 50201
2269	10 µF 50% 50 V	4822 124 40435
2275	220 µF 50% 10 V	4822 124 21708
2278	33 nF 20% 63 V	4822 121 42457
2280	40 pF	4822 125 50092
2281	100 nF 20% 63 V	4822 121 42456
2284	100 nF 20% 63 V	4822 121 42456
2285	40 pF	5322 125 50243
2291	40 pF	4822 125 50092
2294	100 nF 20% 63 V	4822 121 42456
2295	100 nF 20% 63 V	4822 121 42456
2310	47 µF 10 V	4822 124 21484
2312	47 µF 10 V	4822 124 21484
2315	2,2 µF 20% 25 V	4822 124 21707
2316	10 nF 630 V	4822 121 41134
2340	100 nF 20% 63 V	4822 121 42434
2341	100 nF 20% 63 V	4822 121 42434
2346	220 µF 50% 10 V	4822 124 40181
2348	4,7 µF 50% 63 V	4822 124 40246
2349	4,7 µF 50% 63 V	4822 124 40246
2350	220 µF 50% 10 V	4822 124 21708
2351	220 µF 50% 10 V	4822 124 21708
2352	100 nF 20% 63 V	4822 121 42434
2354	100 nF 20% 63 V	4822 121 42434
2355	100 nF 20% 63 V	4822 121 42434
2356	1000 µF 10 V	4822 124 40336
2357	1000 µF 10 V	4822 124 40336
2358	330 µF 20% 16 V	4822 124 40849
2363	100 µF 50% 10 V	4822 124 40178
2364	2200 µF 16 V	4822 124 40332
2371	20 µF 20% 10 V	4822 124 21484
2377	4,7 µF 50% 63 V	4822 124 40246
2378	4,7 µF 50% 63 V	4822 124 40246
2379	220 µF 50% 10 V	4822 124 40181
2380	100 nF 20% 63 V	4822 121 42434
2383	220 µF 50% 10 V	4822 124 21708
2384	220 µF 50% 10 V	4822 124 21708
2386	100 nF 20% 63 V	4822 121 41875
2389	100 nF 20% 63 V	4822 121 42434
2390	100 nF 20% 63 V	4822 121 42434
2401	2,2 µF 20% 16 V	4822 124 10204
2402	2,2 µF 20% 16 V	4822 124 10204
2411	2,2 µF 20% 16 V	4822 124 10204
2412	2,2 µF 20% 16 V	4822 124 10204

2425	0,47 µF 50% 63 V	4822 124 40239
2415	4.7 µF 50% 63 V	4822 124 40246
2422	470 nF 50% 63 V	4822 124 40239
2424	220 nF 20% 63 V	4822 121 41876
2430	220 µF 20% 16 V	4822 124 41097
2431	220 nF 20% 63 V	4822 121 41876
2505	4,7 µF 50% 63 V	4822 124 40246
2912	100 nF 10% 63 V	4822 121 42095
2952	68 nF 5% 63 V	4822 121 50953
2953	68 nF 5% 63 V	4822 121 50953
2954	47 nF 5% 63 V	4822 121 50952
2955	47 nF 5% 63 V	4822 121 50952
2958	22 nF 5% 63 V	4822 121 50949
2959	68 nF 5% 63 V	4822 121 50953
2960	68 nF 5% 63 V	4822 121 50953
2961	68 nF 5% 63 V	4822 121 50953
2962	100 nF 10% 63 V	4822 121 50951

1150	Potm. vol+bal+fader	4822 102 50042
1155	Potm. bass	4822 100 20124
1156	Potm. treble	4822 100 20124
3067	Potm. trimmer 4k7	4822 101 20753
3069	Res. N.T.C. 22k 5%	4822 116 30226
3079	Potm. trimmer 2k2	4822 101 20752
3092	Potm. trimmer	4822 100 10823
3093	Potm. trimmer 10k	4822 101 20755
3260	4E7 5% 1,6 W	4822 116 51869
3265	Potm. trimmer 4k7	4822 101 20753
3387	Potm. trimmer	4822 100 20147
3388	Potm. trimmer	4822 100 20147
3441	820E 5% 0,5 W	4822 116 52433
3446	820E 5% 0,5 W	4822 116 52433
3472	N.T.C. 60E	5322 116 40055
3932	Potm. trimmer 10k	4822 100 10364
3953	11k 1% 0,6 W	4822 116 52907
3955	51k 1% 0,6 W	4822 116 52859
3964	430E 0,5% 0,4 W	4822 116 52941
3965	Potm. trimmer 220E	4822 100 20123
3966	681k 0,5% 0,4 W	5322 116 55284

5050	4822 156 10793
5051	4822 153 10296
5052	4822 152 20579
5053	4822 156 10792
5054	4822 156 10792
5055	4822 156 21167
5057	4822 153 50108
5058	4822 153 50102
5059	4822 526 10025
5060	4822 157 51503
5063	4822 156 10792
5064	4822 152 20577
5247	4822 157 51503
5248	5322 158 14019
5249	4822 157 51503
5251	4822 157 51509
5252	4822 157 52047
5253	4822 156 21289
5254	4822 157 50963
5255	4822 156 21289
5256	4822 157 51507
5257	4822 157 51505
5258	4822 157 51508
5259	4822 156 21292
5260	4822 156 21291
5261	4822 156 10663
5264	4822 156 21345
5267	4822 156 20581
5950	4822 156 40738

ER1400 /02	4822 209 11092
ER1400 /75/78	4822 209 10238
LA2000	4822 209 83159
LM2904N	4822 209 82115
SAA1057	4822 209 81002
SAA1300-N4	4822 209 81338
TDA1005A/S1	4822 209 80514
TDA1072A/V2	4822 209 83281
TDA1515	4822 209 81746
TDA1524A	4822 209 82233
TDA1579	4822 209 81764
TDA3410	4822 209 81274
TEA6000/N4	4822 209 83265
U2562B	4822 209 81337

BC337	4822 130 40855
BC546B	4822 130 44461
BC547	4822 130 44257
BC547B	4822 130 40959
BC547C	4822 130 44503
BC548	4822 130 40938
BC548C	4822 130 44196
BC549C	4822 130 44246
BC557	4822 130 44256
BC558	4822 130 40941
BD137-16	4822 130 42247
BD331	4822 130 42629
BF240	4822 130 40902
BF410A	5322 130 44905
BF410D	4822 130 41697
BSR50	4822 130 41204
ON796	4822 130 41845

AA119		4822 130 31012
BAS11		4822 130 41273
BA281		4822 130 32032
BA314		4822 130 30879
BA317		4822 130 30847
BA423		4822 130 41646
BA479G		4822 130 42033
BAV10		4822 130 30594
BAV20		4822 130 34189
BB204B		4822 130 34449
BB204G		5322 130 34825
BB212		4822 130 31129
BY249-300		5322 130 32326
BZX79-B6V2		4822 130 34167
BZX79/B10		4822 130 34297
BZX79/B5V1		4822 130 34233
BZX79/B9V1		4822 130 30862
BZX79/B8V2		4822 130 34382
BZX79/C4V7		4822 130 34174
BZX79/C5V6		4822 130 34173
LN342GPH	GREEN	4822 130 32331
LN442YPH	YELLOW	4822 130 32329
V342P/A	GREEN	4822 130 32333
1N4001		4822 130 31438
1N4148		4822 130 30621

Miscellaneous

1012	Fuse 6.3 A (T)	4822 253 30031
1050	Thickfilm unit IAC	4822 214 50305
1053	Ceram filter 10.7 MHz	4822 242 70665
1054	Ceram filter 10.7 MHz	4822 242 70665
1057	Crystal 4 MHz	4822 242 71142
1250	Ceram filter AM 468 kHz	4822 242 71209
1251	Ceram filter 4 MHz	4822 242 70831
1253/02	Lamp 14 V 100 mA	4822 134 40547
1253/75/78	Lamp	4822 134 40624
1254/02	Lamp 14 V 100 mA	4822 134 40547
1254/75/78	Lamp	4822 134 40624
1255	Thickfilm unit dolby DBC-1	4822 214 50416
1800	Display	4822 130 90187
	6800 µC	4822 218 10171

Carbon film 0.2 W	70°C	5%	
Carbon film 0.33 W	70°C	5%	
Metal film 0.33 W	70°C	5%	
Carbon film 0.5 W	70°C	5%	
Carbon film 0.67 W	70°C	5%	
Carbon film 1.15 W	70°C	5%	

Ⓒ Chip component

Ceramic plate Tuning ⩽ 120 pF NP.0 Others		 2% —20/+80%
Polyester flat foil		10%
Metalized polyester flat film		10%
Polyester flat foil small size (Mylar)		10%
Polysterene film/foil		1%
Tubular ceramic		
Miniature single		
Subminiature tantalum		± 20%

*a = 2,5 V
b = 4 V
c = 6,3 V
d = 10 V
e = 16 V
f = 25 V
g = 40 V
h = 63 V
j = 100 V
l = 125 V
m = 150 V
n = 160 V
q = 200 V
r = 250 V
s = 300 V
t = 350 V
u = 400 V
v = 500 V
w = 630 V
x = 1000 V
A = 1,6 V
B = 6 V
C = 12 V
D = 15 V
E = 20 V
F = 35 V
G = 50 V
H = 75 V
I = 80 V

©⊣⊢ Chips 50 V NP0 S1206		
1 pF	5%	4822 122 32279
1,5 pF	5%	4822 122 31792
1,8 pF	5%	4822 122 32087
3,3 pF	5%	4822 122 32079
3,9 pF	5%	4822 122 32081
4,7 pF	5%	4822 122 32082
8,2 pF	5%	4822 122 32083
10 pF	5%	4822 122 31971
12 pF	5%	4822 122 32139
18 pF	5%	4822 122 31769
22 pF	10%	4822 122 31837
27 pF	5%	4822 122 31966
33 pF	5%	4822 122 31756
39 pF	5%	4822 122 31972
47 pF	5%	4822 122 31772
56 pF	5%	4822 122 31774
68 pF	5%	4822 122 32267
82 pF	10%	4822 122 31839
100 pF	5%	4822 122 31765
120 pF	5%	4822 122 31766
150 pF	5%	4822 122 31767
180 pF	2%	4822 122 31794
220 pF	5%	4822 122 31965
270 pF	5%	4822 122 32142
330 pF	10%	4822 122 31642
390 pF	5%	4822 122 31771
470 pF	5%	4822 122 31727
560 pF	5%	4822 122 31773
680 pF	5%	4822 122 31775
820 pF	5%	4822 122 31974
1 nF	10%	5322 122 31647
1,2 nF	5%	4822 122 31807
1,5 nF	10%	4822 122 31781
2,2 nF	10%	4822 122 31644
2,7 nF	10%	4822 122 31783
3,3 nF	10%	4822 122 31969
3,9 nF	10%	4822 122 32566
4,7 nF	10%	4822 122 31784
5,6 nF	10%	4822 122 31916
6,8 nF	10%	4822 122 31976
10 nF	10%	4822 122 31728
12 nF	10%	5322 122 31648
15 nF	10%	4822 122 31782
18 nF	10%	4822 122 31759
22 nF	10%	4822 122 31797
27 nF	10%	4822 122 32541
33 nF	10%	4822 122 31981
56 nF	10%	4822 122 32183
100 nF	20%	4822 122 31947

©▭ Chips 0,125 W S1206		
0 E	jumper	4822 111 90163
1 E	5%	4822 111 90184
1,1 E	5%	4822 111 90377
1,2 E	5%	4822 111 90378
1,3 E	5%	4822 111 90379
1,5 E	5%	4822 111 90381
1,6 E	5%	4822 111 90382
1,8 E	5%	4822 111 90383
2 E	5%	4822 111 90384
2,2 E	5%	5322 111 90104
2,4 E	5%	4822 111 90385
2,7 E	5%	4822 111 90386
3 E	5%	4822 111 90387
3,3 E	5%	4822 111 90338
3,6 E	5%	4822 111 90389
3,9 E	5%	4822 111 90391
4,3 E	5%	4822 111 90392
4,7 E	5%	5322 111 90376
5,1 E	5%	4822 111 90393
5,6 E	5%	4822 111 90394
6,2 E	5%	4822 111 90395

©▭ Chips 0,125 W S1206		
6,8 E	5%	4822 111 90254
7,5 E	5%	4822 111 90396
8,2 E	5%	4822 111 90397
9,1 E	5%	4822 111 90398
10 E	2%	5322 111 90095
11 E	2%	4822 111 90338
12 E	2%	4822 111 90341
13 E	2%	4822 111 90343
15 E	2%	4822 111 90344
16 E	2%	4822 111 90347
18 E	2%	5322 111 90139
20 E	2%	4822 111 90352
22 E	2%	4822 111 90186
24 E	2%	4822 111 90355
27 E	2%	5322 111 90375
30 E	2%	4822 111 90356
33 E	2%	4822 111 90357
36 E	2%	4822 111 90359
39 E	2%	4822 111 90361
43 E	2%	5322 116 90125
47 E	2%	4822 111 90217
51 E	2%	4822 111 90365
56 E	2%	4822 111 90239
62 E	2%	4822 111 90367
68 E	2%	4822 111 90203
75 E	2%	4822 111 90371
82 E	2%	4822 111 90124
91 E	2%	4822 111 90375
100 E	2%	5322 111 90091
110 E	2%	4822 111 90335
120 E	2%	4822 111 90339
130 E	2%	4822 111 90164
150 E	2%	5322 111 90098
160 E	2%	4822 111 90345
180 E	2%	5322 111 90242
200 E	2%	4822 111 90348
220 E	2%	4822 111 90178
240 E	2%	4822 111 90353
270 E	2%	4822 111 90154
300 E	2%	4822 111 90156
330 E	2%	5322 111 90106
360 E	1%	4822 111 90288
360 E	2%	4822 111 90358
390 E	2%	5322 111 90138
430 E	2%	4822 111 90362
470 E	2%	5322 111 90109
510 E	2%	4822 111 90245
560 E	2%	5322 111 90113
620 E	2%	4822 111 90366
680 E	2%	4822 111 90162
750 E	2%	5322 111 90306
820 E	2%	4822 111 90171
910 E	2%	4822 111 90372
1 k	2%	5322 111 90092
1,1 k	2%	4822 111 90336
1,2 k	2%	5322 111 90096
1,3 k	2%	4822 111 90244
1,5 k	2%	4822 111 90151
1,6 k	2%	5322 111 90265
1,8 k	2%	5322 111 90101
2 k	2%	4822 111 90165
2,2 k	2%	4822 111 90248
2,4 k	2%	4822 111 90289
2,7 k	2%	4822 111 90569
3 k	2%	4822 111 90198
3,3 k	2%	4822 111 90157
3,6 k	2%	5322 111 90107
3,9 k	2%	4822 111 90571
4,3 k	2%	4822 111 90167
4,7 k	2%	5322 111 90111
5.1 k	2%	5322 111 90268
5,6 k	2%	4822 111 90572
6,2 k	2%	4822 111 90545
6,8 k	2%	4822 111 90544

©▭ Chips 0,125 W S1206		
7,5 k	2%	4822 111 90276
8,2 k	2%	5322 111 90118
9,1 k	2%	4822 111 90373
10 k	2%	4822 111 90249
11 k	2%	4822 111 90337
12 k	2%	4822 111 90253
13 k	2%	4822 111 90509
15 k	2%	4822 111 90196
16 k	2%	4822 111 90346
18 k	2%	4822 111 90238
20 k	2%	4822 111 90349
22 k	2%	4822 111 90251
24 k	2%	4822 111 90512
27 k	2%	4822 111 90542
30 k	2%	4822 111 90216
33 k	2%	5322 111 90267
36 k	2%	4822 111 90514
39 k	2%	5322 111 90108
43 k	2%	4822 111 90363
47 k	2%	4822 111 90543
51 k	2%	5322 111 90274
56 k	2%	4822 111 90573
62 k	2%	5322 111 90275
68 k	2%	4822 111 90202
75 k	2%	4822 111 90574
82 k	2%	4822 111 90575
91 k	2%	5322 111 90277
100 k	2%	4822 111 90214
110 k	2%	5322 111 90269
120 k	2%	4822 111 90568
130 k	2%	4822 111 90511
150 k	2%	5322 111 90099
160 k	2%	5322 111 90264
180 k	2%	4822 111 90565
200 k	2%	4822 111 90351
220 k	2%	4822 111 90197
240 k	2%	4822 111 90215
270 k	2%	4822 111 90302
300 k	2%	5322 111 90266
330 k	2%	4822 111 90513
360 k	2%	4822 111 90515
390 k	2%	4822 111 90182
430 k	2%	4822 111 90168
470 k	2%	4822 111 90161
510 k	2%	4822 111 90364
560 k	2%	4822 111 90169
620 k	2%	4822 111 90213
680 k	2%	4822 111 90368
750 k	2%	4822 111 90369
820 k	2%	4822 111 90205
910 k	2%	4822 111 90374
1 M	2%	4822 111 90252
1,1 M	5%	4822 111 90408
1,2 M	5%	4822 111 90409
1,3 M	5%	4822 111 90411
1,5 M	5%	4822 111 90412
1,6 M	5%	4822 111 90413
1,8 M	5%	4822 111 90414
2 M	5%	4822 111 90415
2,2 M	5%	4822 111 90185
2,4 M	5%	4822 111 90416
2,7 M	5%	4822 111 90417
3 M	5%	4822 111 90418
3,3 M	5%	4822 111 90191
3,6 M	5%	4822 111 90419
3,9 M	5%	4822 111 90421
4,3 M	5%	4822 111 90422
4,7 M	5%	4822 111 90423
5,1 M	5%	4822 111 90424
5,6 M	5%	4822 111 90425
6,2 M	5%	4822 111 90426
6,8 M	5%	4822 111 90235
7,5 M	5%	4822 111 90427
8,2 M	5%	4822 111 90237
9,1 M	5%	4822 111 90428

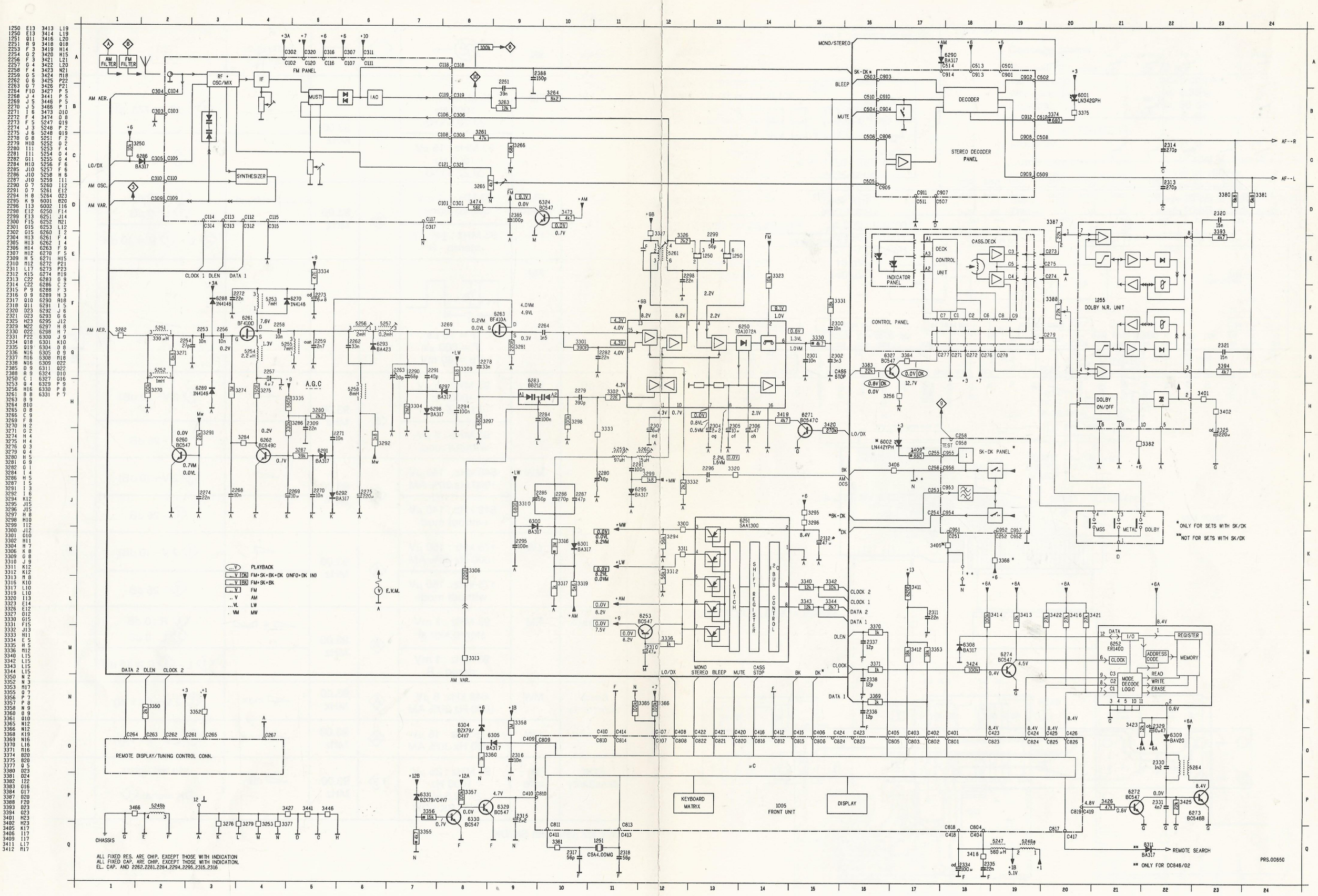
AM FILTER
FM FILTER
RF + OSC/MIX
IF
MUSTI
IAC
FM PANEL
SYNTHESIZER
AM AER.
LO/DX
AM OSC.
AM VAR.
CLOCK 1 DLEN DATA 1
A.G.C
MONO/STEREO
BLEEP
MUTE
DECODER
STEREO DECODER PANEL
AF--R
AF--L
INDICATOR PANEL
DECK CONTROL UNIT
CASS.DECK
CONTROL PANEL
1255 DOLBY N.R. UNIT
DOLBY ON/OFF
CASS STOP
SK-DK PANEL
MSS METAL DOLBY
* ONLY FOR SETS WITH SK/DK
** NOT FOR SETS WITH SK/DK
PLAYBACK
FM+SK+BK+DK (INFO+DK IN)
FM+SK+BK
FM
AM
LW
MW
E.V.M.
6251 SAA1300
LATCH
SHIFT REGISTER
I²C BUS CONTROL
CLOCK 2
CLOCK 1
DATA 2
DATA 1
DLEN
CLOCK
6252 ER1400
REGISTER
MEMORY
ADDRESS CODE
MODE DECODE LOGIC
READ
WRITE
ERASE
REMOTE DISPLAY/TUNING CONTROL CONN.
µC
KEYBOARD MATRIX
1005 FRONT UNIT
DISPLAY
REMOTE SEARCH
** ONLY FOR DC846/02
CHASSIS
ALL FIXED RES. ARE CHIP. EXCEPT THOSE WITH INDICATION
ALL FIXED CAP. ARE CHIP. EXCEPT THOSE WITH INDICATION.
EL. CAP. AND 2262,2281,2284,2294,2295,2315,2316
PRS.00850

CS 676

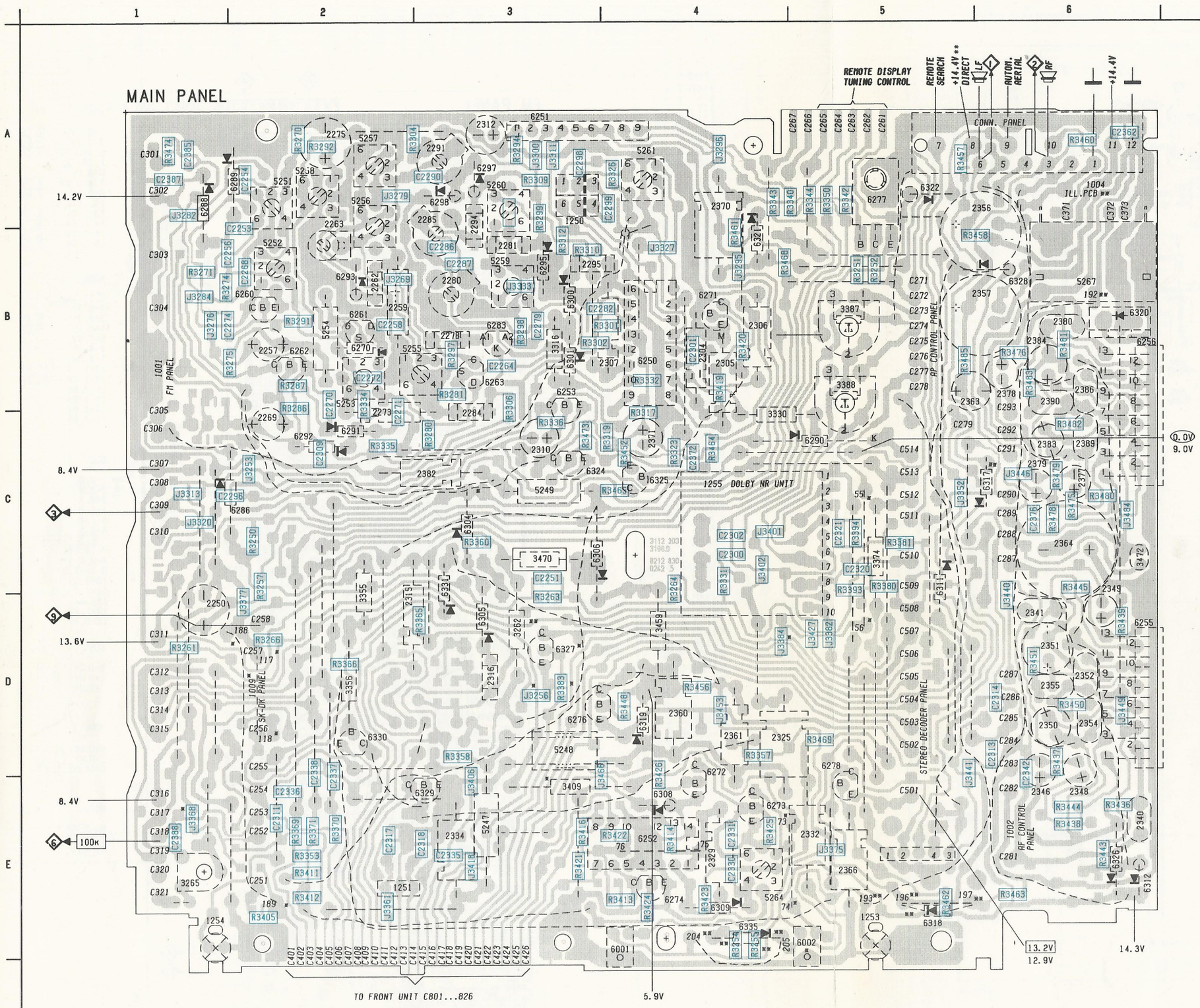

6250
1=8.2V
2=1.0V [9.1V]
3.4=2.2V
5=2.1V
6=1.0VM 1.3VL [0.8V]
7=0.5VM 0.8VL [0.0V]
8=1.5VM 2.2VL [0.0V]
10=0.7V
11.12=4.3V
13=8.2V
14.15=4.0V 4.3V
16=⏚

6251
1=⏚
2=8.4V
3=8.2VM 0.0VL [0.0V]
4=0.0VM 8.2VL [0.0V]
5=8.2V [0.0V]
6=8.2V [0.0V]
7=8.2V [0.0V]

6252
1=8.4V
2=0.6V
3.4.5=⏚
6=4.5V
7.8.9=8.4V
10.11=⏚
12=8.4V

6255
1=7.2V
2.3=7.1V
4=0.0V
5=7.1V
6=13.2V
7=⏚
8=13.2V
9=7.1V
10=14.3V
11=3.1V
12=7.1V
13=7.2V

6255
1=7.2V
2.3=7.1V
4=0.0V

6253
B=8.2V [0.0V]
E=7.5V [0.0V]
C=8.2V [0.0V]

6260
B=0.7VM 0.0VL
E=⏚
C=0.0V

6261
G=0.2V
D=7.6V
S=1.3V

6262
B=0.7V
E=⏚
C=0.2V

6263
G=0.2VM 0.0VL
D=4.0VM 4.9VL
S=0.3V

6271
B=0.0V
E=⏚
C=0.6V [0.0V]

6272
B=0.6V
E=⏚
C=0.0V

6273
B=0.0V
E=⏚
C=8.4V

6276
B=5.9V
E=5.8V 4.8V **
C=12.2V 12.6V **

6277
B=9.0V
E=8.4V
C=13.3V

6324
B=0.7V [0.0V]
E=⏚
C=0.0V [9.1V]

6325
B=9.0V
E=8.4V
C=13.8V

6327
B=0.0V (0.6V DK)
E=0.0V
C=12.7V (0.0V DK)

6329
B=0.0V
E=⏚
C=4.7V

6330
B=0.7V
E=⏚
C=0.0V

PCB.00074

* ONLY FOR SETS WITHOUT SK/DK
DELETED: 1009.3256.3383.3384.
3409.6002.6327.
JUMPER 55-56.73-74.
ADDED: JUMPER 117-118.188-189

** ONLY FOR DC846/02
DELETED: 1004.3254.3255.3262
JUMPER192-193.196-197.204-205
ADDED: 3457.6317.6318

6278
B=14.3V
E=13.6V
C=14.3V

6274
B=0.4V
E=⏚
C=4.5V

E. V. M. (V)
(...V DK) PLAYBACK+FM+SK+BK+DK (DK+SK IN)
(...V) PLAYBACK
[...V] FM
...V AM (M=MW, L=LW)

1250	A 3	6262	B 2	J3327	B 4	R3448	D 4				
1251	E 2	6263	B 3	J3333	B 3	R3450	D 6				
1253	E 5	6270	B 2	J3352	C 5	R3451	D 6				
1254	E 1	6271	B 4	J3361	E 2	R3452	C 4				
1255	C 4	6272	D 4	J3368	E 1	R3456	D 4				
2250	D 1	6273	E 4	J3375	E 5	R3458	B 6				
2257	B 2	6274	E 4	J3377	D 2	R3457	A 5				
2259	B 2	6276	D 3	J3382	D 5	R3460	A 6				
2262	B 2	6277	A 5	J3384	D 4	R3461	B 4				
2263	A 2	6278	D 5	J3401	C 4	R3462	E 5				
2269	C 2	6283	B 3	J3402	C 4	R3463	E 6				
2273	C 2	6286	C 2	J3406	E 3	R3464	C 4				
2275	A 2	6288	A 1	J3418	E 3	R3465	C 4				
2278	B 3	6289	A 2	J3427	D 5	R3468	B 4				
2280	B 3	6290	C 5	J3440	D 6	R3469	D 5				
2281	B 3	6291	C 2	J3441	D 5	R3473	C 3				
2284	C 3	6292	C 2	J3446	C 6	R3474	A 1				
2285	A 3	6293	B 2	J3449	D 6	R3475	C 6				
2291	A 3	6295	B 3	J3453	D 4	R3476	B 6				
2294	B 3	6297	A 3	J3466	D 4	R3478	C 6				
2295	B 3	6298	A 3	J3484	C 6	R3479	C 6				
2304	B 4	6300	B 3	R3250	C 2	R3480	C 6				
2305	B 4	6301	B 3	R3251	B 5	R3481	B 6				
2306	B 4	6304	C 3	R3252	B 5	R3482	C 6				
2307	B 4	6305	D 3	R3254	E 4	R3483	B 6				
2310	C 3	6306	C 4	R3255	E 4	R3485	B 5				
2312	A 3	6308	E 4	R3257	C 2						
2315	D 3	6309	E 4	R3261	D 1						
2316	D 3	6311	C 5	R3263	D 3						
2325	D 4	6312	E 6	R3264	C 4						
2329	E 4	6317	C 6	R3266	D 2						
2332	E 5	6318	E 5	R3270	A 2						
2334	E 3	6319	D 4	R3271	B 1						
2340	E 6	6320	B 6	R3274	B 2						
2341	D 6	6321	B 4	R3275	B 2						
2346	E 6	6322	A 5	R3280	C 3						
2348	E 6	6324	C 3	R3281	B 3						
2349	C 6	6325	C 4	R3286	B 2						
2350	D 6	6326	E 6	R3287	B 2						
2351	D 6	6327	D 3	R3291	B 2						
2352	D 6	6328	B 6	R3292	A 2						
2354	D 6	6329	E 3	R3294	A 3						
2355	D 6	6330	D 2	R3297	B 3						
2356	A 6	6331	D 3	R3298	B 3						
2357	B 6	6335	E 4	R3299	A 3						
2360	D 4	C2251	C 3	R3301	B 4						
2361	D 4	C2253	B 2	R3302	B 3						
2363	B 5	C2254	A 2	R3304	A 3						
2364	C 6	C2256	B 2	R3306	B 3						
2366	E 5	C2258	B 2	R3309	A 3						
2370	A 4	C2264	B 3	R3310	B 3						
2371	C 4	C2268	B 2	R3312	B 3						
2377	C 6	C2270	B 2	R3317	C 4						
2378	B 6	C2271	B 2	R3319	C 4						
2379	C 6	C2272	B 2	R3323	C 4						
2380	B 6	C2274	B 2	R3326	A 4						
2382	C 3	C2279	B 3	R3331	C 4						
2383	C 6	C2282	B 4	R3332	B 4						
2384	B 6	C2286	B 3	R3334	B 2						
2386	B 6	C2287	B 3	R3335	C 2						
2389	C 6	C2290	A 3	R3336	C 3						
2390	B 6	C2296	C 2	R3340	A 5						
3262	D 3	C2298	A 3	R3342	A 5						
3265	E 1	C2299	A 4	R3343	A 4						
3316	B 3	C2300	C 4	R3344	A 5						
3330	C 4	C2301	B 4	R3350	A 5						
3355	D 2	C2302	C 4	R3353	E 2						
3356	D 2	C2309	C 2	R3357	D 4						
3374	C 5	C2311	E 2	R3358	D 3						
3387	B 5	C2313	D 6	R3360	C 3						
3388	B 5	C2314	D 6	R3365	D 3						
3409	E 3	C2317	E 2	R3366	D 2						
3459	D 4	C2318	E 3	R3369	E 2						
3470	C 3	C2320	C 5	R3370	E 2						
3472	C 6	C2321	C 5	R3371	E 2						
5247	E 3	C2330	E 4	R3380	C 5						
5248	D 3	C2331	E 4	R3381	C 5						
5249	C 3	C2335	E 3	R3383	D 3						
5251	A 2	C2336	E 2	R3393	D 5						
5252	B 2	C2337	D 2	R3394	C 5						
5253	B 2	C2338	D 2	R3405	E 2						
5254	B 2	C2342	D 6	R3411	E 2						
5255	B 2	C2362	A 6	R3412	E 2						
5256	A 2	C2372	C 4	R3413	E 4						
5257	A 2	C2376	C 6	R3414	E 4						
5258	A 2	C2385	A 1	R3416	E 3						
5259	B 3	C2387	A 1	R3419	B 4						
5260	A 3	C2388	E 1	R3420	B 4						
5261	A 4	J3253	C 2	R3421	E 3						
5264	E 4	J3256	D 3	R3422	E 4						
5267	B 6	J3269	B 2	R3423	E 4						
6001	E 4	J3276	B 1	R3424	E 4						
6002	E 5	J3279	A 2	R3425	E 4						
6250	B 4	J3282	A 1	R3426	D 4						
6251	A 3	J3284	B 1	R3436	E 6						
6252	E 4	J3295	B 4	R3437	D 6						
6253	B 3	J3296	A 4	R3438	E 6						
6255	D 6	J3300	A 3	R3439	D 6						
6256	B 6	J3311	A 3	R3443	E 6						
6260	B 2	J3313	C 1	R3444	E 6						
6261	B 2	J3320	C 1	R3445	C 6						

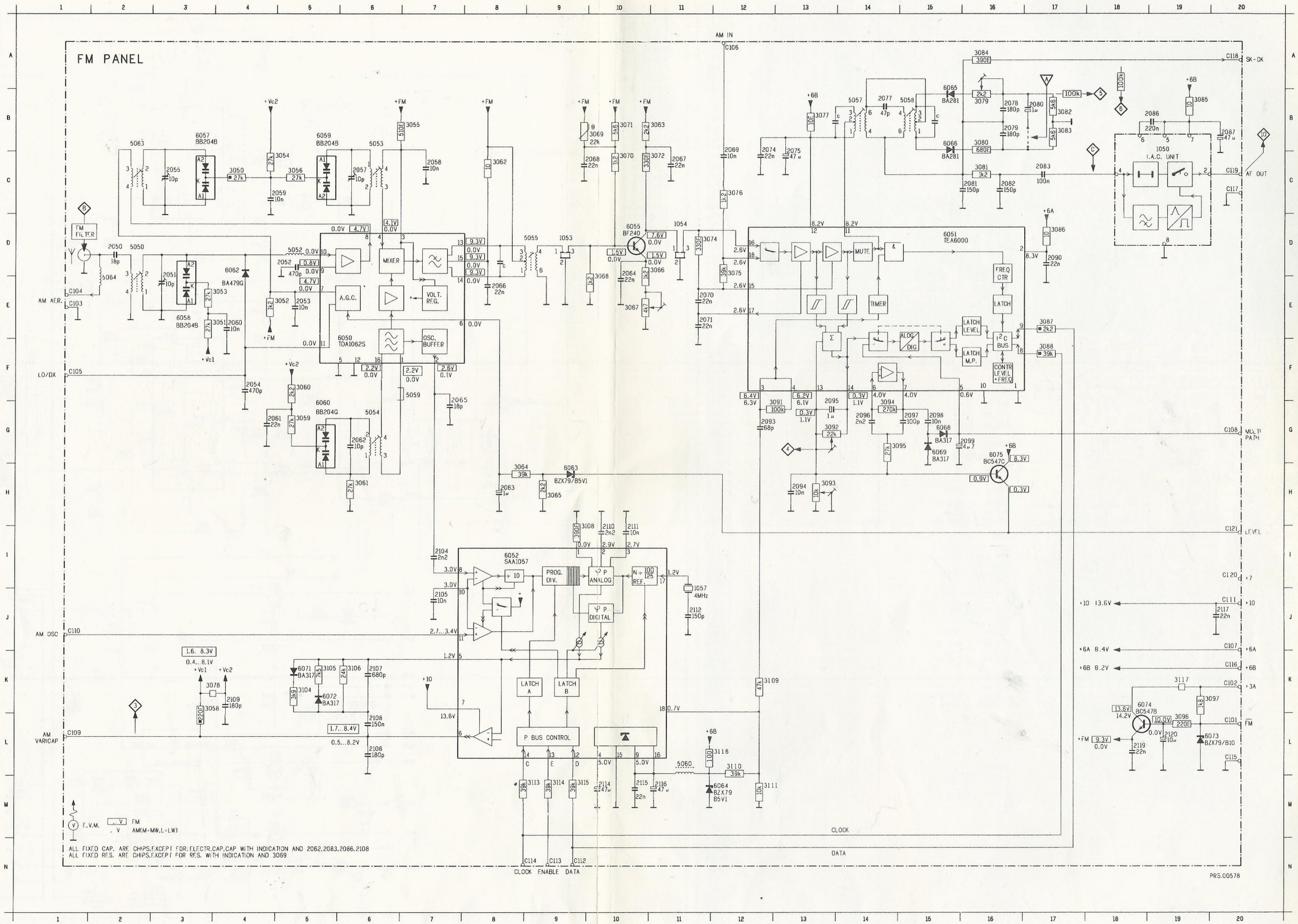

1050	B19	6068	C15
1053	D 9	6069	C15
1054	D11	6071	K 5
1057	I11	6072	K 5
2050	D 2	6073	L20
2051	D 3	6074	K18
2052	D 5	6075	G16
2053	E 5		
2054	F 4		
2055	C 3		
2057	C 6		
2058	C 7		
2059	C 5		
2060	E 4		
2061	G 4		
2062	G 6		
2063	H 8		
2064	D10		
2065	F 7		
2066	E 8		
2067	C11		
2068	C10		
2069	B12		
2070	E11		
2071	E11		
2074	B12		
2075	B13		
2077	B14		
2078	B16		
2079	B16		
2080	B17		
2081	C16		
2082	C16		
2083	C17		
2086	B19		
2087	B20		
2090	D17		
2093	G12		
2094	H13		
2095	F13		
2096	G14		
2097	G15		
2098	G15		
2099	G16		
2104	I 7		
2105	J 7		
2106	L 6		
2107	K 6		
2108	L 6		
2109	K 4		
2110	I10		
2111	I10		
2112	J11		
2114	M10		
2115	M10		
2116	M11		
2119	L18		
2120	L19		
3050	C 4		
3051	E 4		
3052	E 5		
3053	E 4		
3054	C 5		
3055	B 7		
3056	C 5		
3058	K 3		
3059	G 5		
3060	F 5		
3061	H 6		
3062	C 8		
3063	B11		
3064	H 8		
3065	H 9		
3066	D11		
3067	E10		
3068	D10		
3069	B10		
3070	C10		
3071	B10		
3072	C11		
3074	D11		
3075	D12		
3076	C12		
3077	B13		
3078	K 4		
3079	B16		
3080	B16		
3081	C16		
3082	B17		
3083	B17		
3084	A16		
3085	B19		
3086	D17		
3087	E17		
3088	F17		
3091	G13		
3092	G13		
3093	H13		
3094	G14		
3095	G15		
3096	L19		
3097	K20		
3104	K 5		
3105	K 5		
3106	K 6		
3108	I10		
3109	K12		
3110	L12		
3111	M12		
3113	M 9		
3114	M 9		
3115	M 9		
3116	L12		
3117	K19		
5050	D 2		
5052	D 5		
5053	B 6		
5054	G 6		
5055	D 9		
5057	B14		
5058	B15		
5059	F 7		
5060	L11		
5063	B 2		
5064	E 2		
6050	E 6		
6051	D15		
6052	I 8		
6055	D10		
6057	B 3		
6058	E 3		
6059	B 5		
6060	G 5		
6062	D 4		
6063	H 9		
6064	M12		
6065	A15		
6066	B15		

2900	C 2	2907	B 8	2913	D 6	2917	F 2	2925	F11	3904	C 3	3909	F 3	3913	F 6	3918	F 4	3922	G 5	3928	G 8	3936	A11	3943	E11	6903	D 3	6908	E 4	A	G 4
2901	D 3	2908	A 9	2914	E 5	2920	F 7	3900	D 2	3905	C 5	3910	E 6	3914	F 5	3919	G 3	3925	G 6	3931	A 8	3938	C11	3946	D 4	6904	A11	6909	E 4	B	G 7
2902	C 5	2909	A 9	2915	E 5	2921	G 9	3902	E 3	3906	E 3	3911	E 5	3915	F 4	3920	G 3	3926	F 7	3932	A10	3941	F11	3947	D 5	6905	G 8	6910	E 5		G 4
2906	A 7	2912	D 6	2916	F 5	2924	E11	3903	E 3	3908	D 6	3912	E 5	3916	F 2	3921	G 3	3927	G 7	3933	A10	3942	E11	6900	B10	6906	C 2	6913	F 9		

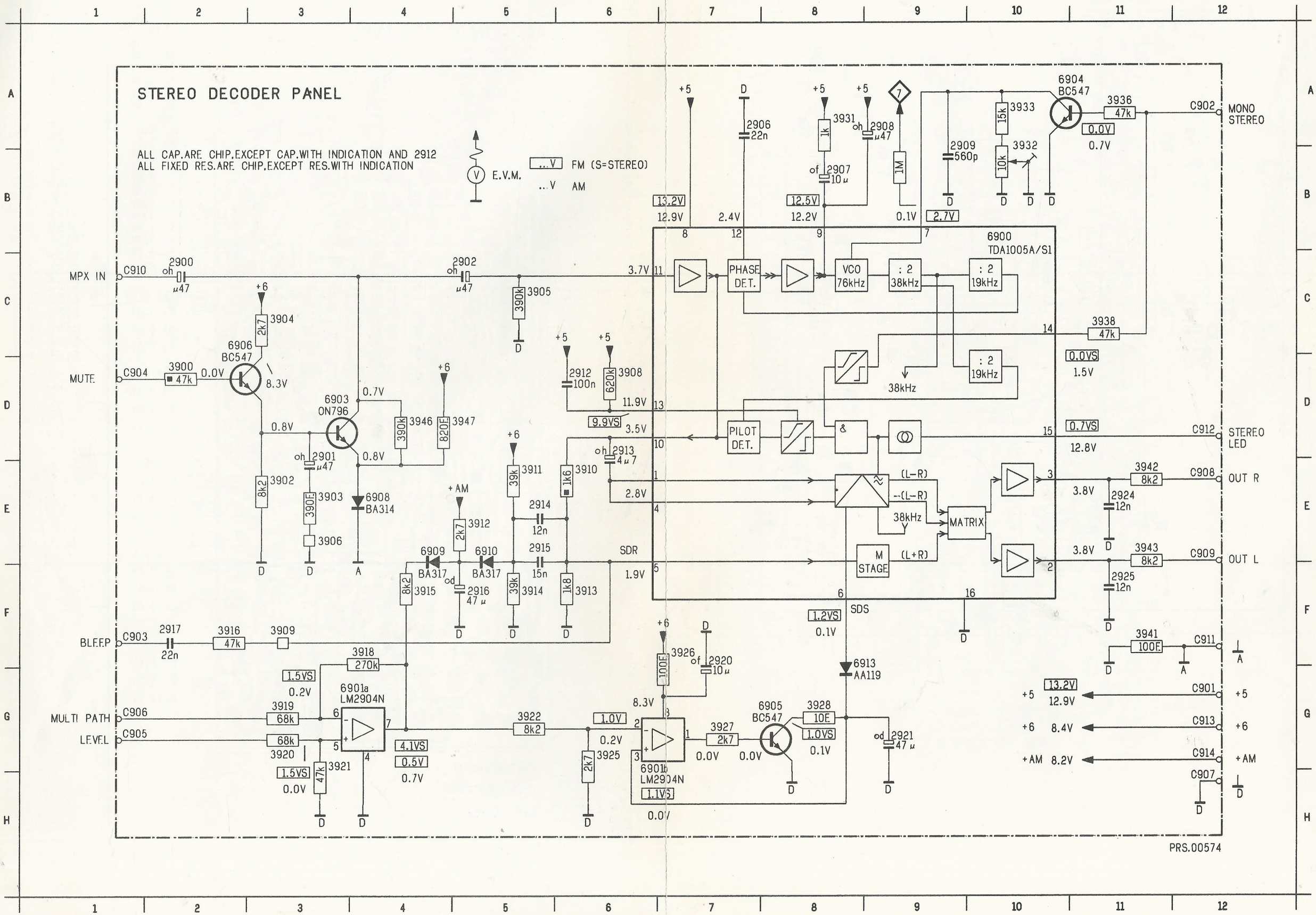

401 /02	4822 454 11248
401 /75/78	4822 454 11258
402	4822 310 30663
403	4822 310 30652
405	4822 423 40809
408	4822 404 20437
409	4822 218 10171
411	4822 310 20356
414	4822 459 80267
416	4822 218 10169
417	4822 443 30463
418	4822 310 30648
423	4822 492 41276
424	4822 443 61557
426 /02	4822 310 30662
426 /75/78	4822 310 30674
431	4822 276 11517
432	4822 310 10079
433	4822 462 40694
434	4822 492 90087
436	4822 321 20444
437	4822 321 20448
438	4822 267 40415
439 /02	4822 267 40526
439 /75/78	4822 267 40606
441	4822 423 90107
442	4822 466 60985
443	4822 310 30651
446	4822 502 11837

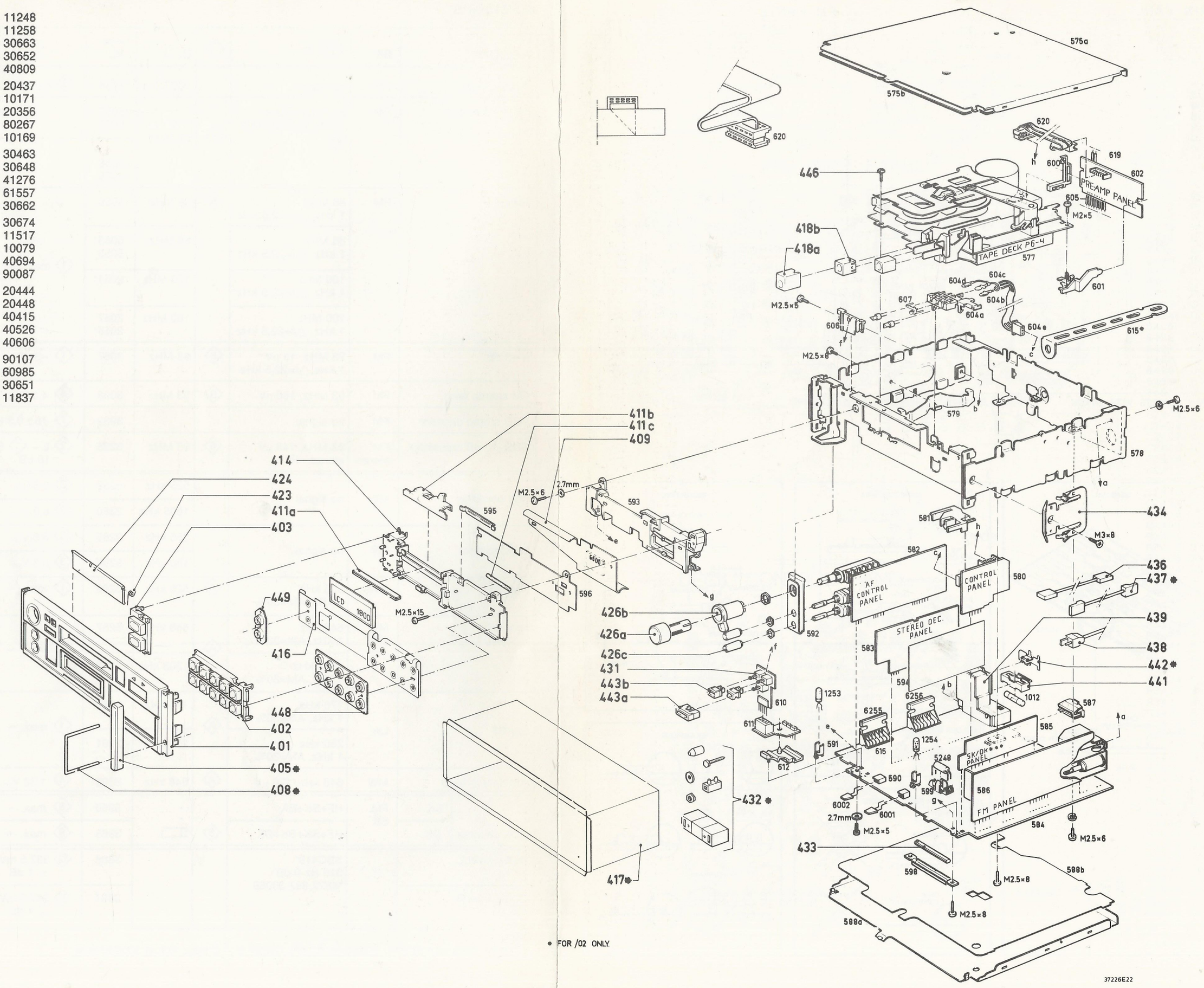

* FOR /02 ONLY.