Service
Service
Service

For circuit description see Car radio cluster family.
For repair information of the cassette deck see Service Manual of Car cassette deck P6-17.

Service Manual

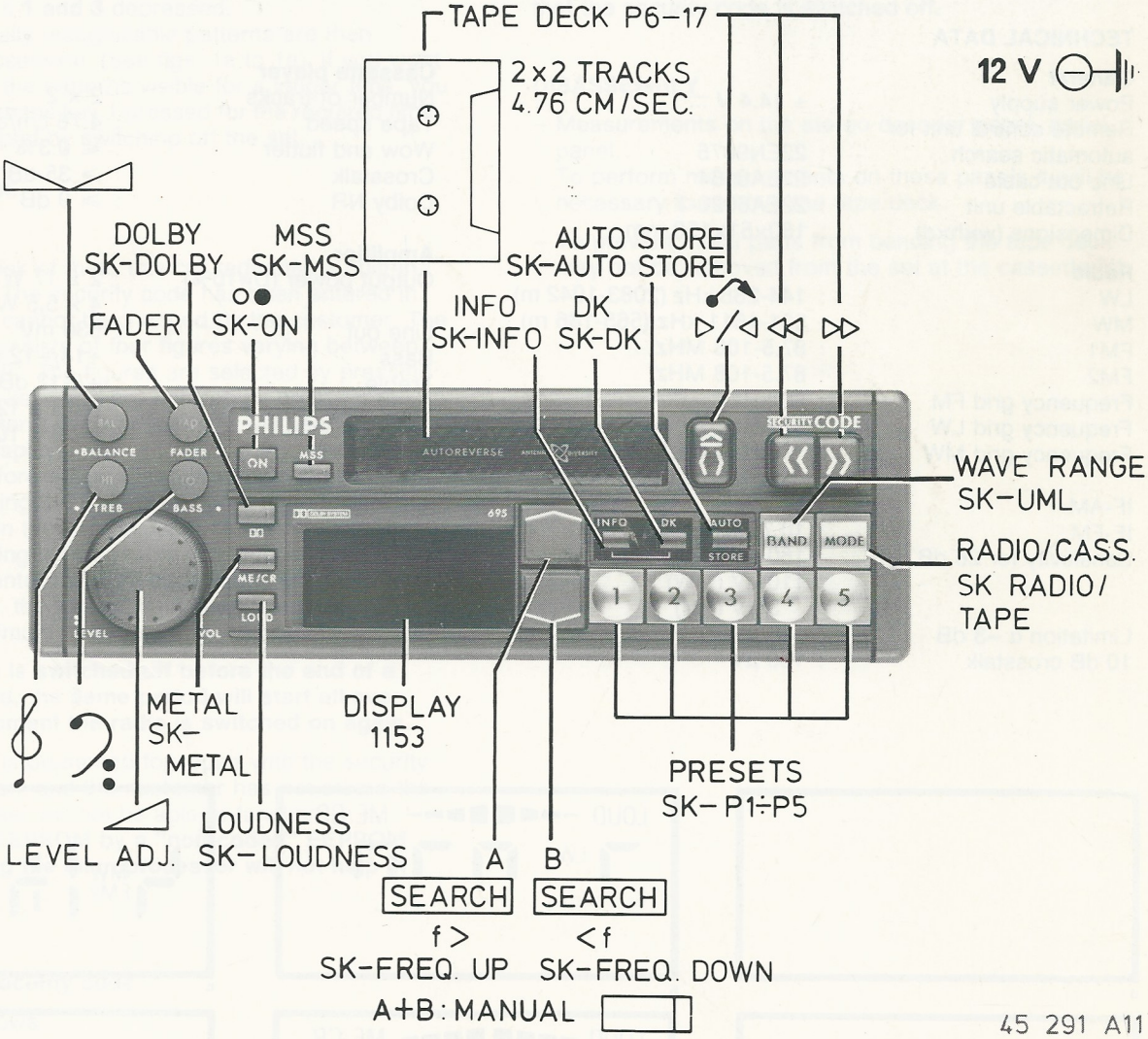

45 291 A11

Documentation Technique Service Dokumentation Documentazione di Servizio Huolte-Ohje Manual de Servicio Manual de Serviçio

Subject to modification
GB 4822 725 22681
Printed in The Netherlands

PHILIPS

Published by
Consumer Electronics

CS 28 555

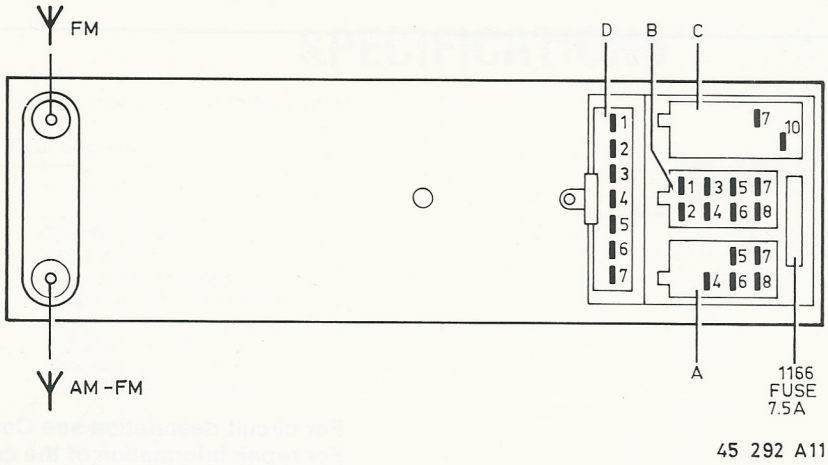

CONNECTIONS OF BLOCK

A4 : + 14.4 V ⎓ PERMANENT
A5 : AUTOM. AERIAL
A6 : EXT. ILLUMINATION
A7 : + 14.4 V ⎓ SWITCHED
A8 : ⊥

B1 : RIGHT REAR
B2 : 7 W - 4 Ω
B3 : RIGHT FRONT
B4 : 7 W - 4 Ω
B3 : RIGHT
B2 : 20 W - 4 Ω

B5 : LEFT FRONT
B6 : 7 W - 4 Ω
B7 : LEFT REAR
B8 : 7 W - 4 Ω
B5 : LEFT
B8 : 20 W - 4 Ω

C7 : REMOTE SEARCH
C10 : ⊥ REMOTE SEARCH
D1-D7 : LINE OUT

TECHNICAL DATA

General

Power supply	: + 14.4 V ⎓
Remote control unit for automatic search	: 22EN9875
Line out cable	: 22EA6164
Retractable unit	: 22EA6020-1
Dimensions (w×h×d)	: 180×51×150 mm

Radio

LW	: 144-288 kHz (2083-1042 m)
MW	: 531-1611 kHz (565-186 m)
FM1	: 87.5-108 MHz
FM2	: 87.5-108 MHz
Frequency grid FM	: 50 kHz
Frequency grid LW	: 1 kHz
Frequency grid MW	: 9 kHz (search) 1 kHz (manual tuning)
IF-AM	: 10,7 MHz
IF-FM	: 10,7 MHz
Sensitivity for 26 dB S/R	: 160 µV (LW) 110 µV (MW) 3 µV (FM)
Limitation α −3 dB	: 15 µV
10 dB crosstalk	: 150 µV

Cassette player

Number of tracks	: 2 × 2
Tape speed	: 4.76 cm/sec
Wow and flutter	: ⩽ 0.3%
Crosstalk	: ⩾ 35 dB
Dolby NR	: ⩾ 9 dB

Amplifier

Output power (D=10%)	: 2 × 17 W ± 1 dB (2 × 4Ω) 4 × 5,5 W ± 1 dB (4 × 4Ω)
Line out	: 630 mV
Bass	: +14/−12 dB à 100 Hz
Treble	: +/−12 dB à 10 kHz
Loudness	: 8 dB à 125 Hz 5 dB à 10 kHz

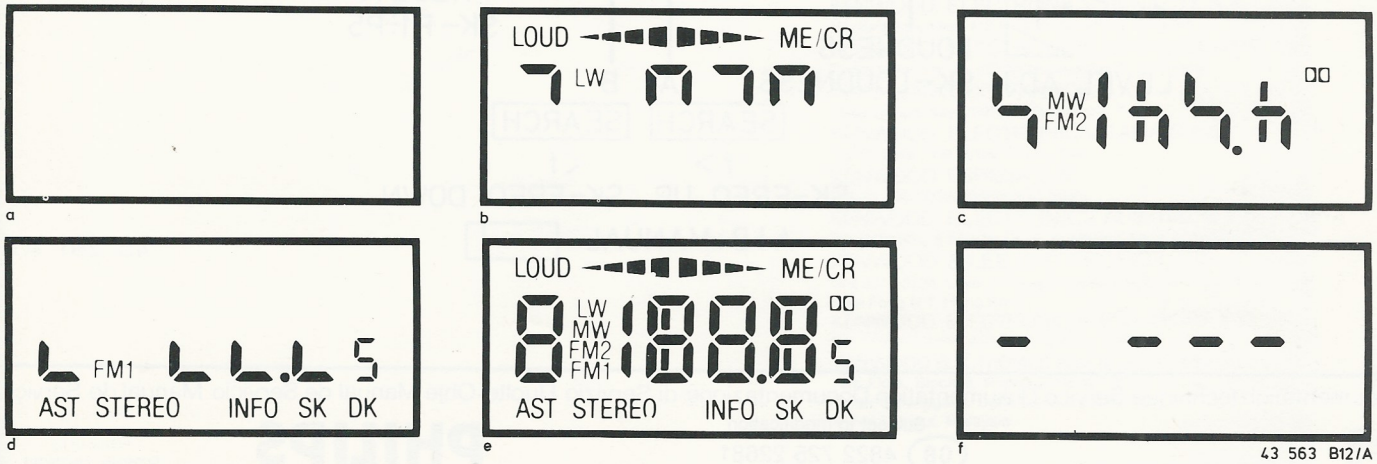

SERVICING HINTS

ESD

All ICs and many other semi-conductors are susceptible to electrostatic discharges (ESD).
Careless handling during repair can reduce service life drastically. When repairing, make sure that you are connected to the same potential as the mass of the set via a wrist wrap with resistance.
Keep components and tools also at this potential.

SERVICE TEST PROGRAMMME

The µC test programme can be called without first entering the security code.

µC test

This test is called by switching on the set **while** keeping the keys **1 and 2** depressed.
Besides the RAM, a great number of µC instructions are tested. If no faults occur, a special pattern will be displayed. (See fig. 1f).
The test can be stopped by switching off the set.

Display test

The display test is called by switching on the set **while** keeping the keys **1 and 3** depressed.
A number of easily recognizable patterns are then displayed in succession. (See figs. 1a to 1e). If you want to make one of the patterns visible for a longer time, you only have to keep the key **1** pressed for the required time.
The test is stopped by switching off the set.

SECURITY CODE

General

To reduce the risk of theft, this car radio has a built-in electronic lock. The security code has been entered in the factory and cannot be changed by the customer. The security code consists of four figures varying between "0000" and "9999". The figures are selected by pressing the ^ and ˇ keys and are entered by pressing the key **1**. If you enter a wrong code, you will hear an error beep and the display shows "-C-". Now you have to wait for 1 minute before entering another code. **Do not switch off the set.** During the waiting period 6 segments will light up in turn in the left-handside of the display. After 1 minute the lighting-up stops and you will be given a new opportunity to enter the right code. Each time a wrong code is entered, the waiting time is doubled, so 1, 2, 4, 8 etc. with a maximum of 32 minutes.

When the radio is switched off before the end of a "waiting" period, the same period will start all over again at the moment the radio is switched on again.

Note: If the set is presented for repair with the security code switched on, and the customer has not stated the right code, the set will not be able to function.
Replacing the EEPROM by a "non-coded" EEPROM and/or replacing the microprocessor will not help in that case.

Working

Activiting the security code

Proceed as follows:
Switch the set on **while** pressing key ^.
Now you hear a two-tone beep and the protection is activated. The car radio will signal that the code has been activated by briefly showing "-C" in the display at the moment of switching on the radio.

Entry of the code

Now that the security code is active, the code should be entered again each time the supply voltage has been interrupted.

Example: Suppose the code is 4567.

Action	Display shows	Note
– Switch on	-C-	
– Press key 1	-	
– Select ^ / ˇ "4"	4	first figure
– Press key 1	4-	
– Select ^ / ˇ "5"	45	second figure
– Press key 1	45-	
– Select ^ / ˇ "6"	456	third figure
– Press key 1	456-	
– Select ^ / ˇ "7"	4567	fourth figure
– Press key 1	....	two-tone beep

The radio starts operating.

Switching off the code

Switch the set on **while** pressing key ^ . The display shows the indication "-C-". Enter the right code in the way described above. Two two-tone squeaks confirm that the security code is switched off.

DISASSEMBLY

- Measurements on the stereo decoder panel, aerial panel.
  To perform measurements on these panels it will be necessary to remove the tape deck.
- To prevent metal parts from bending the tape deck may not be removed from the set at the cassette lift.

HANDLING CHIP COMPONENTS

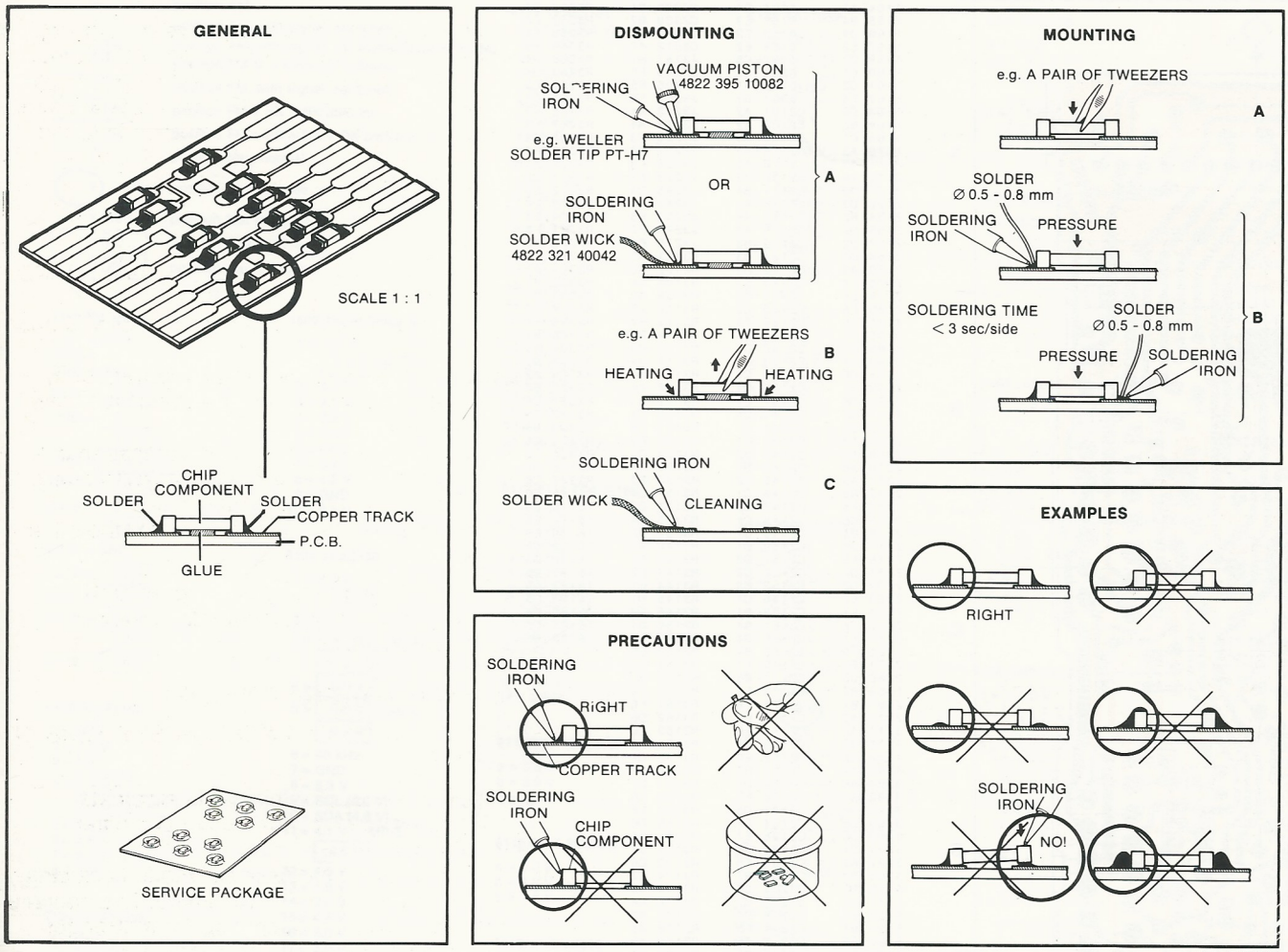

27 012C12

OPERATION

SOUND REPRODUCTION

GENERAL

Volume, balance, fader, bass and treble are adjusted electronically. Each adjustment takes place in steps with the large knob. Normally this knob has the function of volume control.
If you press one of the buttons BALANCE, FADER, TREBLE or BASS, the function of the large knob changes to that of balance, fader, treble or bass control respectively.
On the display the characters B A L, F A D, H I or L O appear. With the large knob you can adjust the level of the selected function. The level of the adjusted function is (for each wave range and cassette reproduction) automatically stored in the memory.
A short while (10 seconds) after the last adjustment the large knob automatically becomes volume control again. If you press the same button a second time within these 10 seconds, the large knob will become volume control immediately.

ADJUSTMENT

Balance

- Press the BALANCE selector.
  On the display the characters B A L appear.
- Turn the large knob and adjust the balance between left and right channels.
  Left channel: If you turn the large knob counterclockwise from the mid-position, the display will first show **-0-**, then **1--**, **2--** etc. to max. **9--**.
  Right channel: If you turn the knob clockwise you will see **--1**, **--2**, etc. to max. **--9**.

Fader

- Press the FADER selector and adjust the sound distribution between front and rear loudspeakers by turning the large knob.
  Now the display shows the characters F A D. When turning the large knob the display shows the adjustment in digits Counterclockwise from **-0-** to **9--**: front, clockwise: from **-0-** to **--9**: rear.

Treble and Bass

- Press the TREBLE or BASS selector and adjust the timbre with the large knob. The display shows H I or L O. When turning the large knob the display shows the adjustment in digits. Counterclockwise from **-0-** to **4--**: less treble (or bass), clockwise from **-0-** to **--4**: more treble (or bass).

RADIO RECEPTION

WAVE RANGE

- Select the desired wave range by pressing the button BAND one or more times.
  The display shows the selected wave range:
  LW for long wave,
  MW for medium wave,
  FM1 for FM or
  FM2 for FM.

SEARCH TUNING

- Press briefly one of the tuning buttons ^ or ˇ and you will receive a station after a short time.
- Press the same button again and you will receive the next station in the direction of the search.
- When the highest frequency (e.g. for FM: 108 MHz) is reached the tuning switches automatically to the lowest frequency (for FM: 87.5 MHz) and vice versa.
- Search tuning occurs on three sensitivity levels for all wave ranges. First the radio searches for strong stations. If no stations are found the search tuning system will switch over to a higher sensitivity level when the whole range has been scanned. Now less strong transmitters are tuned etc.
  When, after some time (more than 80 seconds), one of the tuning buttons is operated again, the automatic tuning system starts searching for strong transmitters once more.
- If the system tunes to a station that has been programmed in that wave range on one of the presets, the display will also show the relevant preset number.

MANUAL TUNING

- Press **both** tuning buttons ^ and ˇ simultaneously.
- Press briefly **one** of the tuning buttons ^ or ˇ .
  The frequency changes with one step up or down.
- Keep **one** of the tuning buttons ^ or ˇ pressed.
  After 1 second fast scanning starts and will continue until you release the button. During this operation the radio is muted. When the highest frequency is reached the lowest frequency will follow and vice versa.
  The manual tuning mode will automatically switch back to the search tuning mode if:

1. the tuning buttons are out of use for longer than 50 seconds.
2. the radio is switched **off** and **on** again.
3. one of the buttons MODE, 1-5 or AUTO STORE is operated.

PROGRAMMING

a. AUTOSTORE

AUTO STORE both on the FM and the MW bands is an extended search tuning system. The radio offers the possibility to have five additional stations on FM and on MW stored automatically by only one operation.

- First select the FM or MW waveband with the button BAND.
- Press the AUTO STORE button longer than 2 secs. You will hear a two-tone beep. The display shows a flashing AST and the frequency indication disappears.
- The radio is muted and the five strongest stations are automatically programmed on the five presets.
  Every time that a frequency is stored the display shows the preset number and the frequency of the station. When all presets have been stored, the radio switches to the AUTO STORE **operation** mode initiated by a two-tone beep.
  Now you are listening to the strongest station in this area programmed on preset key 1.
  If the LW band is selected you hear an error beep.
  Now you have to press the BAND selector once more (for MW) or twice (for FM).
- Select the other wave range (FM or MW) with the BAND selector.
- Press the AUTO STORE button again until the AST indication starts flashing.
  Now five stations on the other wave range are programmed and stored.

Remarks

- If under certain circumstances it is not possible to find five stations, the remaining preset buttons (e.g. 4 and 5) are programmed with '000'. If you later select a preset with '000' the radio will mute.
- If a transmitter with traffic information is found, the INFO mode is stored automatically. (See chapter: TRAFFIC INFORMATION).

b. PRESETS (1-5)

- Select the desired wave range with the button BAND.
- Tune accurately to the desired station.
- Press the desired preset (e.g. button 1) until you hear a two-tone beep.
  The display shows: the wave range, the frequency and the preset number to which the transmitter has been programmed.
  Note: If the preset button is pressed for less than 2 seconds you recall the frequency stored previously.
- Program the other preset in the same way.
- Repeat the above-mentioned operation for the other wave ranges.

Remark: The INFO mode may be programmed simultaneously with the frequency. See chapter: TRAFFIC INFORMATION.

c. TRAFFIC INFORMATION (INFO) on FM

AUTOMATIC SELECTION OF INFO TRANSMITTERS IN THE INFO MODE

One of the special features of this set is automatic search for and tuning in of a new INFO transmitter (AUTO INFO SEARCH).
When the radio is in INFO mode or DK mode (including INFO mode) and the tuned INFO transmitter has become too weak, the radio will start searching for a stronger station indicated by a beep (warning tone). This indication is important because in the DK mode the tuned transmitter is muted. In the INFO mode you will hear the new INFO station. If no INFO transmitter can be found the warning tone will be repeated every 30 seconds. You can stop these beep tones by switching off the INFO mode (press the INFO button again).

PROGRAMMING of INFO TRANSMITTERS

If the INFO mode is active during programming of an FM station, the INFO mode will also be programmed. Later when selecting this FM preset, you need not touch the INFO button again.

Remark: During manual tuning the INFO mode is switched off.

FUNCTION REMAINING CONTROLS

See photo on frontpage

MAIN PANEL

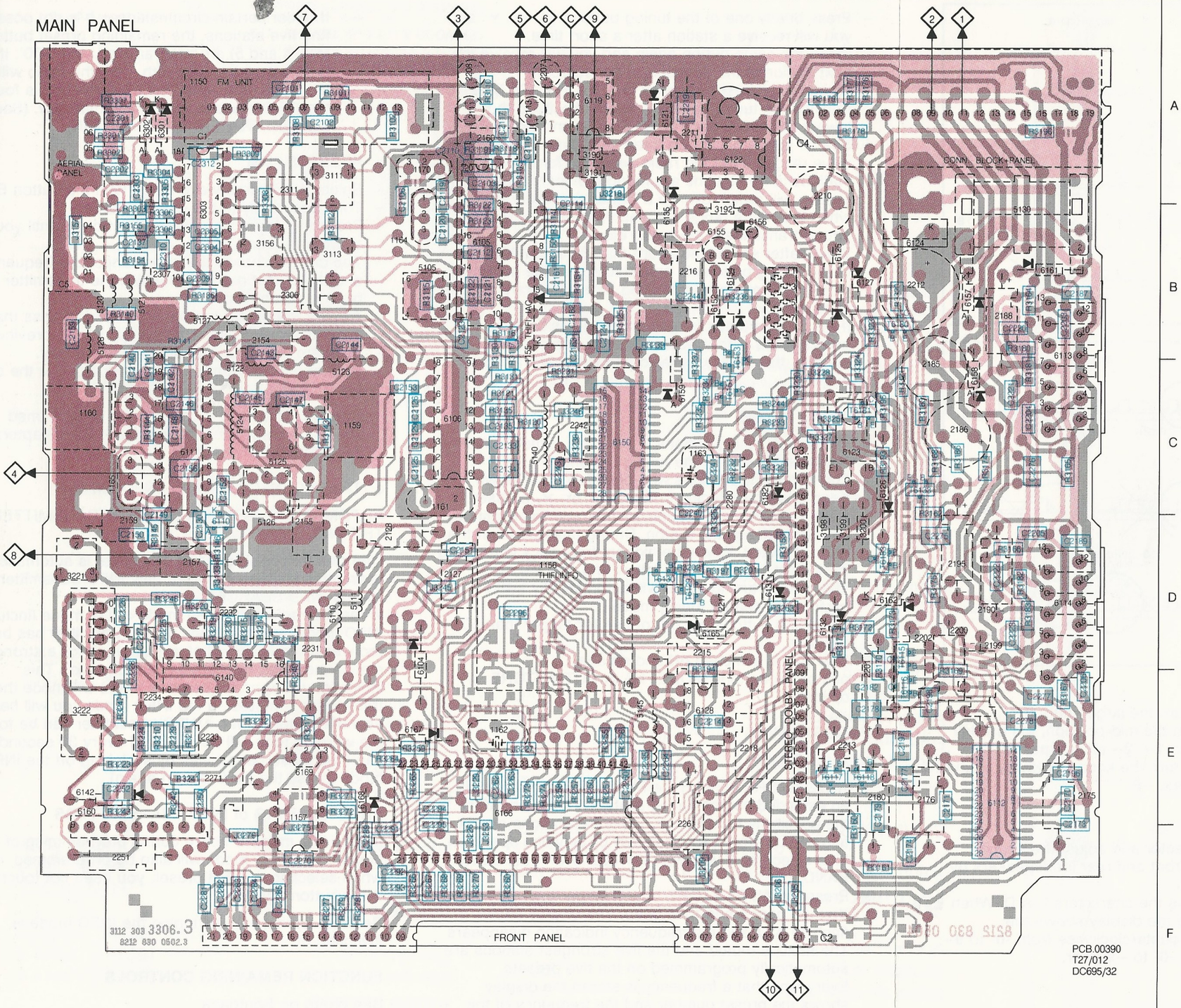

1150	A2	6165	D5	C2305	B2	R3255	E4
1154	A1	6166	E4	C2308	B1	R3256	E4
1155	B4	6167	E3	C2309	B2	R3257	E4
1156	D4	6168	E3	C2310	B1	R3258	E4
1157	E2	6169	E2	C2312	A2	R3259	E3
1159	C3	6182	C5	J3157	B1	R3260	F4
1160	C1	6301	A1	J3205	F5	R3263	D5
1161	C3	6302	A1	J3206	F5	R3264	E3
1162	E4	6303	B2	J3209	F5	R3265	E3
1163	C5	C2101	A2	J3218	A4	R3266	F3
1164	B3	C2102	A2	J3218	A4	R3267	F3
1165	C1	C2103	A3	J3226	F3	R3268	F3
1170	A3	C2106	A3	J3227	E4	R3269	F3
2111	A3	C2110	A3	J3228	C6	R3270	F3
2113	A4	C2112	B3	J3229	E3	R3271	E3
2127	D3	C2114	B4	J3245	D3	R3272	E3
2128	D3	C2116	A4	J3246	C4	R3273	E4
2154	B2	C2117	A4	J3253	F3	R3274	E4
2155	D2	C2119	A3	J3275	F2	R3277	F2
2157	D2	C2120	B3	J3276	F2	R3278	F3
2158	D1	C2121	B3	R3101	A2	R3279	F3
2160	A3	C2122	B3	R3102	A3	R3301	A1
2175	E7	C2123	B3	R3105	A4	R3302	A1
2176	E6	C2124	B4	R3108	A2	R3303	B1
2180	E6	C2125	C3	R3110	A3	R3304	A1
2185	C6	C2126	C3	R3112	B2	R3305	A1
2186	C6	C2129	C3	R3114	B4	R3306	B1
2188	B7	C2130	D2	R3115	B3	R3307	A1
2190	D7	C2133	C4	R3116	B4	R3308	B2
2195	D6	C2134	C4	R3117	B4	R3309	A2
2199	D7	C2135	C4	R3118	A4	R3320	B6
2200	D6	C2137	B1	R3119	A3	R3321	C6
2201	D6	C2140	C1	R3120	C4	R3322	C5
2202	D6	C2141	C1	R3121	C4	R3323	B6
2207	A4	C2142	C1	R3122	B3	R3324	C6
2208	A3	C2143	B2	R3123	B3	R3325	C6
2210	A6	C2144	B3	R3125	B4	R3326	D5
2211	A5	C2145	C2	R3130	B3	R3327	C6
2212	B6	C2146	C1	R3131	C4	T6115	D6
2213	E6	C2147	C2	R3133	D2	T6116	E6
2215	D5	C2148	C1	R3135	C4	T6117	E6
2216	B5	C2149	D1	R3136	B2	T6118	E6
2217	D5	C2150	D1	R3140	B1	T6129	D5
2218	E5	C2151	D3	R3141	C1	T6130	D5
2231	D2	C2152	C2	R3143	C2	T6133	C6
2232	D2	C2153	C3	R3144	C1	T6151	C5
2233	E2	C2156	C1	R3145	D1	T6153	C5
2234	E1	C2159	B1	R3146	D2	T6180	B6
2242	C4	C2161	B4	R3150	B4	T6181	C6
2251	F1	C2162	B4	R3151	B4	T6183	D6
2261	F5	C2163	B4	R3153	D5		
2271	E2	C2170	E7	R3154	B1		
2280	C5	C2171	E6	R3155	B1		
2306	B2	C2173	F7	R3160	F6		
2307	B1	C2174	F6	R3161	F6		
2311	A2	C2177	E6	R3162	D6		
3111	A2	C2178	E6	R3163	C6		
3113	B2	C2179	E6	R3164	B7		
3156	B2	C2182	E6	R3165	C7		
3190	A4	C2187	B7	R3166	D7		
3191	A4	C2189	D7	R3167	E7		
3192	B5	C2192	E7	R3168	C6		
3198	D6	C2193	D6	R3169	E6		
3199	D6	C2194	E7	R3170	D6		
3200	D6	C2196	E7	R3171	D6		
3221	D1	C2197	E6	R3172	D6		
3222	E1	C2198	E6	R3173	D6		
5105	B3	C2203	B7	R3174	C7		
5110	D2	C2204	C7	R3175	D6		
5111	D3	C2205	D7	R3176	A6		
5120	B1	C2206	E7	R3177	A6		
5121	B1	C2214	E5	R3178	A6		
5122	C2	C2219	A5	R3179	A6		
5123	C2	C2220	B7	R3180	B7		
5124	C2	C2221	C7	R3181	C7		
5125	C2	C2222	D7	R3182	D7		
5126	D2	C2223	D7	R3183	D7		
5127	B2	C2225	D1	R3186	C6		
5128	B1	C2226	D1	R3193	C6		
5130	B7	C2227	D1	R3194	E5		
5140	C4	C2228	E1	R3195	C6		
5145	E4	C2229	E1	R3196	A7		
6104	D3	C2230	D2	R3197	D5		
6105	B3	C2240	D5	R3201	D5		
6106	C3	C2241	C5	R3202	D5		
6110	D2	C2243	C4	R3210	E1		
6111	C2	C2244	B5	R3211	E2		
6112	E7	C2250	E2	R3212	E2		
6113	B7	C2252	E1	R3213	D2		
6114	D7	C2260	E4	R3214	D2		
6119	A4	C2262	E4	R3215	D2		
6121	A5	C2263	E4	R3217	E2		
6122	A5	C2264	E5	R3219	D2		
6123	C6	C2265	E4	R3220	D2		
6124	B6	C2270	F2	R3223	E1		
6125	B6	C2275	D6	R3224	E1		
6126	C6	C2276	C7	R3230	C5		
6127	B6	C2277	E7	R3231	C4		
6128	E5	C2278	E7	R3232	C5		
6131	D5	C2281	F2	R3233	C5		
6132	D6	C2282	F2	R3234	C5		
6135	B5	C2283	F2	R3235	C5		
6140	E2	C2284	F2	R3236	B5		
6142	E1	C2285	F2	R3237	C5		
6150	C4	C2289	F3	R3238	C4		
6152	B5	C2291	F3	R3239	B4		
6154	B5	C2292	F3	R3240	E2		
6155	B5	C2293	F3	R3241	E2		
6156	B5	C2294	E3	R3242	E1		
6157	B7	C2295	F3	R3243	E1		
6158	C7	C2296	D4	R3244	C5		
6159	C5	C2301	A1	R3247	E1		
6160	E1	C2302	A1	R3248	D1		
6161	B7	C2303	A1	R3250	E4		
6162	D6	C2304	B2	R3251	E4		

. . . V	position AM
. . . V*	position AM, with signal, set tuned
. . . V MU	position AM, with signal, set muted (search/mode)
[. . . V]	position FM M = Mono, S = Stereo
[. . . V*]	position FM, with signal, set tuned
[. . . V BK]	position FM + SK + BK (info in)
[. . . V DK]	position FM + SK + BK + DK (info in)
. . . V	position play, normal
(. . . V)	position play, reverse
. . . V MSS	position fast wind, MSS
. . . V ME	position play, METAL
. . . V DB	position play, DOLBY

1150 FM tuner

C101 = GND
C102 = –
C103 = GND
C104 = [0.0 V]
C105 = 0.1 V
[1.7 V]
C106 = [8.4 V]
C107 = [1.3 - 5.5 V] MP-7
C108 = 0.1 V
[1.4 V]
C109 = GND
C110 = [1.7 V]
C111 = [3.0 V]
C112 = 8.4 V
[0.2 V]
C113 = [1.8 V]

1155 Thi-Fi IAC

1 = N.C.
2 = 2.5 V
3 = N.C.
4 = [0.5 V]
[1.0 - 5.0 V*]
5 = 4.2 V
6 = 7.8 V
7 = 8.2 V
8 = GND

1156 Thi-Fi SDK

1 = GND
2 = [4.5 V]
3 = [4.8 V DK]
4 = N.C.
5 = [4.8 V BK]
6 = N.C.
7 = N.C.
8 = N.C.
9 = N.C.
10 = [8.5 V]

1601 Thi-Fi Stereo Decoder

1 = [5.0 VM]
[0.7 VS]
2 = 3.5 V
3 = 3.4 V
4 = 2.5 V
5 = 2.6 V
6 = GND
7 = 0.5 V
1.8 V*
8 = 8.3 V
9 = [1.0 V]
[5.0 V*]
10 = [0.5 V]
[4.6 V*]
11 = 4.9 V
[0.0 V]
12 = 3.5 V
13 = 0.0 V
5.0 V MU
14 = 5.0 V
0.0 V MU
15 = 3.4 V
16 = 2.6 V
17 = 3.4 V
18 = 3.4 V
19 = 3.4 V
20 = 3.4 V

1602 Thi-Fi Dolby B

1 = 0.0 V
[5.0 V DB]
2 = 4.2 V
3 = 4.2 V
4 = 3.4 V
5 = GND
6 = GND
7 = 3.4 V
8 = 4.2 V
9 = GND
10 = 8.4 V

6105 TEA6100

1 = 8.3 V
[8.2 V]
2 = 1.2 V
3 = [0.8 V] MP-5
[1.3 - 5.0 V*]
4 = [0.0 V]
5 = [0.6 V] MP-6
[0.1 V*]
6 = 40 kHz
7 = GND
8 = 8.3 V
9 = SCL (4.6 V)
10 = SDA (4.6 V)
11 = 4.1 V MP-3
[4.5 V]
12 = 4.6 V
13 = 4.6 V
14 = 2.4 V
15 = 4.4 V
16 = 3.0 V
17 = 3.0 V
18 = 3.0 V
19 = 3.0 V
20 = GND

6106 TSA6057

1 = 4 MHz
2 = 4 MHz
3 = 4.7 V
4 = GND
5 = [1.8 V]
6 = 1.8 V
7 = 1.8 V
8 = 7.6 V
[0.2 V]
9 = 40 kHz
10 = SDA (4.6 V)
11 = SCL (4.6 V)
12 = GND
13 = [1.3 - 5.5 V]
14 = [2.1 V]
15 = N.C.
16 = 8.5 V

6111 TEA6200

1 = 6.6 V
2 = 4.0 V
3 = 8.2 V
4 = 8.2 V
5 = 8.2 V
6 = 8.2 V
7 = 0.7 V
8 = 4.0 V
9 = 4.0 V
10 = 4.0 V
11 = 6.7 V
12 = 1.4 V MP-4
13 = 4.7 V
14 = 7.6 V
[0.2 V]
15 = 4.7 V
16 = 4.7 V
17 = GND
18 = 1.0 V
19 = 1.3 V
20 = 3.3 V

6112 TEA6310T

1 = SDA (6,4 V)
2 = GND
3 = 3.9 V
4 = 3.9 V
5 = 3.9 V
6 = 3.9 V
7 = 3.9 V
8 = N.C.
9 = 6.6 V
10 = N.C.
11 = 7.7 V
12 = N.C.
13 = N.C.
14 = 3.9 V
15 = 3.9 V
16 = N.C.
17 = N.C.
18 = GND
19 = N.C.
20 = 3.9 V
21 = GND
22 = 3.9 V
23 = 3.9 V
24 = 3.9 V
25 = 3.9 V
26 = 3.9 V
27 = 7.8 V
28 = SCL (6.4 V)

6113/6114 TDA1516Q

1 = 2.2 V
2 = 2.2 V
3 = GND
4 = 2.2 V
5 = 6.7 V
6 = 14.3 V
7 = GND
8 = 14.3 V
9 = 6.7 V
10 = 14.3 V
11 = 14.2 V
12 = 6.7 V
13 = 2.2 V

6115/6117 BC847B

e = 3.3 V
b = 3.9 V
c = 7.8 V

6116/6118 BC847B

e = 3.3 V
b = 1.8 V
c = 7.8 V

6119/6122 L4916

1 = 14.2 V
2 = 2.5 V
3 = N.C.
4 = 8.4 V
5 = GND
6 = GND
7 = GND
8 = GND

6123 BD438

e = 14.3 V
b = 13.6 V
c = 14.2 V

6128 L4904

1 = 12.8 V
2 = 8.4 V
3 = 5.6 V
4 = GND
5 = N.C.
6 = 4.2 V
7 = 5.0 V
8 = 5.0 V

6129 BC847B

e = GND
b = 0.6 V
c = 0.0 V

6130 BC847B

e = GND
b = 0.0 V
c = 4.9 V

6133 BC847B

e = GND
b = 0.7 V
c = 0.0 V

6140 TA7705P

1 = [8.1 V]
2 = [3.3 V]
3 = [0.0 V]
4.9 V
4 = [3.3 V]
5 = [2.9 V]
6 = [2.9 V]
7 = [2.9 V]
8 = GND
9 = [2.9 V]
10 = N.C.
11 = [2.9 V]
12 = [2.9 V]
13 = [2.9 V]
14 = [3.3 V]
15 = [0.1 V]
4.9 V ME
16 = [3.3 V]

6150 TMP42C70N

1 = 2 MHz
2 = 2 MHz
3 = [5.0 V]
0.5 V
4 = [0.0 V]
4.8 V MU
5 = [0.0 V]
(4.9 V)
6 = [4.6 V]
7 = [0.0 V]
4.8 V MSS
0.0 V
8 = [0.0 V]
4.8 V MU
9 = N.C.
10 = N.C.
11 = N.C.
12 = [4.0 V]
4.0 V
0.0 V MSS
13 = [4.5 V]
1.5 V
14 = GND
15 = [0.1 V]
4.9 V ME
16 = SDA [(6.4 V)]
17 = SCL [(6.4 V)]
18 = [0.4 V]
▷ ◁
10 V
0.4 V
19 = [4.6 V]
20 = N.C.
21 = N.C.
22 = N.C.
23 = N.C.
24 = N.C.
25 = N.C.
26 = N.C.
27 = N.C.
28 = [4.9 V]

6151 BC847B

e = GND
b = [0.0 V]
0.7 V MU
c = [5.0 V]
0.0 V MU

6153 BC847B

e = GND
b = [0.8 V / 0.0 V MSS]
c = [14.2 V MSS / 0.1 V]

6160 LA2000

1 = [1.9 V]
2 = –
3 = [1.9 V]
4 = N.C.
5 = GND
6 = [0.0 V]
[4.8 V MSS / 0.0 V]
7 = N.C.
8 = N.C.
9 = [8.5 V]

6166 TMP47C 800 N

1 = [0.0 V]
[5.0 V DB]
2 = [5.0 VM]
[7.0 VS]
3 = 0.0 V
5.0 V MU
[5.0 V]
4 = 4.9 V
[0.0 V]
5 = 5.0 V
[5.0 V / 0.1 V / ▷/◁ A RADIO]
A:EJECT/WIND/MODE
6 = 5.0 V
0.0 V BEEP
7 = 5.0 V
8 = N.C.
9 = N.C.
10 = N.C.
11 = N.C.
12 = N.C.
13 = 5.0 V
14 = GND
15 = GND
16 = 5.0 V
17 = 3.5 V
18 = 5.0 V
19 = 5.0 V
20 = 5.0 V
21 = GND
22 = 5.0 V
23 = 5.0 V
24 = 0.0 V
[5.0 V] DX (AST)
25 = 7.6 V
[0.0 V]
(0.0 V)
26 = 5.0 V
27 = 5.0 V
28 = 5.0 V
29 = 5.0 V
30 = GND
31 = 4 MHz
32 = 4 MHz
33 = 4.9 V
34 = 4.2 V
35 = [4.8 V DK]
36 = [4.8 V BK]
37 = [0.4 V]
[10 V / 0.4 V / ▷ ◁]
38 = 0.5 V
[5.0 V]
39 = N.C.
40 = SDA (6.4 V)
41 = SCL (6.4 V)
42 = 5.0 V

6169 MC78L05ACP

1 = 13.4 V
2 = GND
3 = 5.0 V

6170 X2404I

1 = GND
2 = GND
3 = GND
4 = GND
5 = SDA (6.4 V)
6 = SCL (6.4 V)
7 = GND
8 = 5.0 V

6180 BC857B

e = 14.3 V
b = 13.7 V
c = 14.3 V

6181 BC857B

e = 14.3 V
b = 13.9 V
c = 10.2 V

6183 BC847B

e = 0.0 V
b = 0.8 V
c = 0.2 V

6303 TEA6101

1 = 8.3 V
2 = 7.6 V
[0.2 V]
3 = 3.6 V
4 = 5.3 V
[5.2 V]
5 = 0.9 V
[0.6 V]
6 = 5.2 V
[5.3 V]
7 = N.C.
8 = N.C.
9 = N.C.
10 = 5.0 V
[5.3 V]
11 = 5.2 V
[6.2 V]
12 = 5.2 V
[5.4 V]
13 = |||
14 = 0.0 V
15 = 0.0 V
16 = 0.1 V
17 = N.C.
18 = 0.0 V

6601/6602 BC858B

e = 1.4 V
b = 0.8 V
1.3 V*
c = 1.4 V
0.0 V*

6604 BC847B

e = 0.0 V
b = [0.6 V]
[0.1 V*]
c = [1.0 V]
[5.0 V*]

6606/6607 BC847B

e = 1.9 V
b = 2.6 V
c = 5.5 V

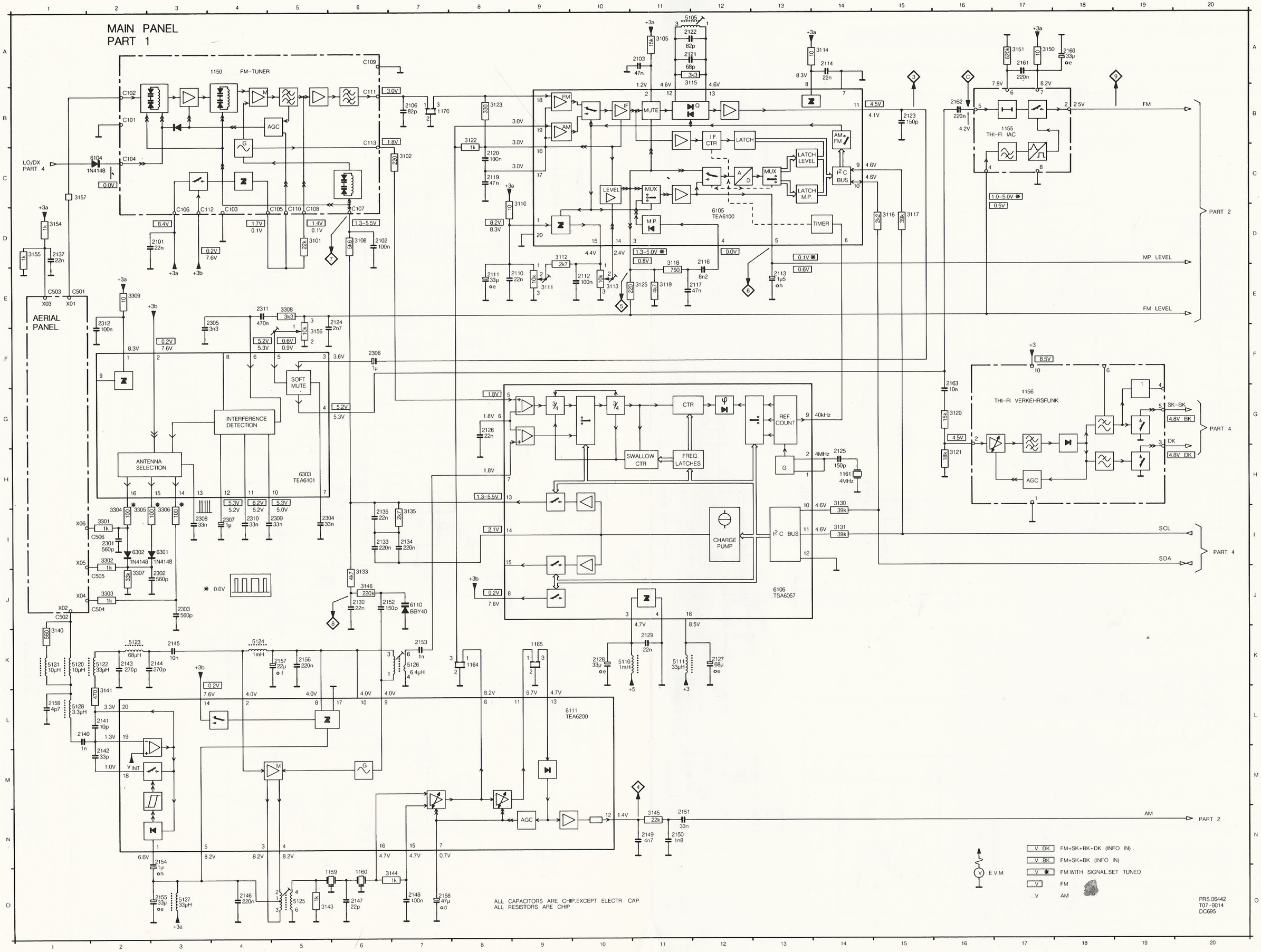

1150	A4
1155	B17
1156	G17
1159	O5
1160	O6
1161	H14
1164	K8
1165	K9
1170	B7
2101	D3
2102	D6
2103	A11
2106	B7
2110	E9
2111	E8
2112	E10
2113	E13
2114	A14
2116	D12
2117	E11
2119	C8
2120	C8
2121	A12
2122	A12
2123	B15
2124	E6
2125	H14
2126	G8
2127	K12
2128	K10
2129	K11
2130	J6
2133	I6
2134	I7
2135	I6
2137	D1
2140	L1
2141	L2
2142	M2
2143	K2
2144	K3
2145	K3
2146	O4
2147	O6
2148	O7
2149	N11
2150	N11
2151	N11
2152	J6
2153	K7
2154	N3
2155	O3
2156	K5
2157	K5
2158	O7
2159	L1
2160	A18
2161	A17
2162	B16
2163	G16
2301	I2
2302	J3
2303	J3
2304	I5
2305	E3
2306	F6
2307	I4
2308	I3
2309	I5
2310	I4
2311	E4
2312	E2
3101	D5
3102	C7
3105	A11
3108	D6
3110	D9
3111	E9
3112	D9
3113	E10
3114	A14
3115	A12
3116	D15
3117	D15
3118	D11
3119	E11
3120	G16
3121	H16
3122	B8
3123	B8
3125	E11
3130	H14
3131	I14
3133	J6
3135	I7
3140	K1
3141	L2
3143	O5
3144	O7
3145	N11
3146	J6
3150	A17
3151	A17
3154	D1
3155	D1
3156	F5
3157	C1
3301	I2
3302	I2
3303	J2
3304	I2
3305	I2
3306	I3
3307	J2
3308	E5
3309	E2
5105	A12
5110	K10
5111	K11
5120	K1
5121	K1
5122	K2
5123	K2
5124	K4
5125	O5
5127	O3
5128	L1
6104	C2
6105	D12
6106	J13
6110	J7
6111	L9
6301	I3
6302	I2
6303	H5

CS 28 559

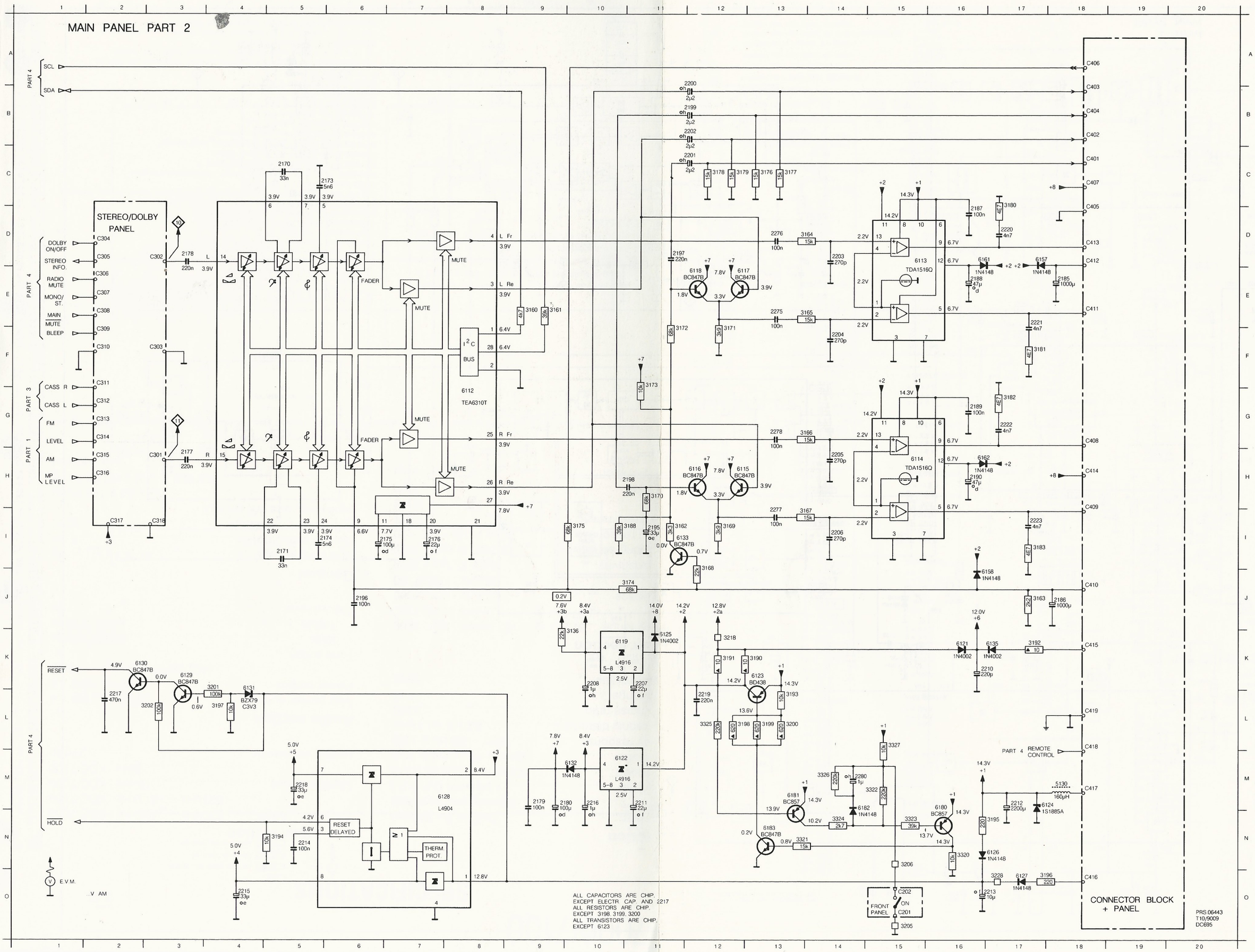

2170	C	5
2171	I	5
2173	C	6
2174	I	6
2175	I	7
2176	I	7
2177	H	3
2178	D	3
2179	M	9
2180	M	10
2185	E	18
2186	J	18
2187	D	16
2188	E	16
2189	G	16
2190	H	16
2195	I	11
2196	J	6
2197	D	11
2198	H	11
2199	B	12
2200	A	12
2201	C	12
2202	B	12
2203	D	14
2204	F	14
2205	H	14
2206	I	14
2207	K	11
2208	K	10
2210	K	17
2211	M	11
2212	M	17
2213	O	17
2214	N	5
2215	O	4
2216	M	10
2217	L	2
2218	M	5
2219	L	12
2220	D	17
2221	E	17
2222	G	17
2223	I	17
2275	E	13
2276	D	13
2277	I	13
2278	G	13
2280	M	14
3136	K	10
3160	E	9
3161	E	9
3162	I	11
3163	J	17
3164	D	14
3165	E	14
3166	G	14
3167	I	14
3168	I	12
3169	I	12
3170	H	11
3171	F	12
3172	F	11
3173	F	11
3174	J	11
3175	I	10
3176	C	13
3177	C	13
3178	C	12
3179	C	12
3180	C	17
3181	F	17
3182	G	17
3183	I	17
3188	I	11
3190	K	13
3191	K	12
3192	K	18
3193	L	13
3194	N	5
3195	N	17
3196	O	18
3197	L	4
3198	L	13
3199	L	13
3200	L	13
3201	K	4
3202	L	3
3205	O	15
3206	N	15
3218	K	12
3228	O	17
3320	N	16
3321	N	13
3322	M	15
3323	N	15
3324	N	14
3325	L	12
3326	M	14
3327	L	15
5130	M	18
6112	G	8
6113	D	15
6114	H	15
6115	H	12
6116	H	12
6117	E	12
6118	E	12
6119	K	10
6121	K	17
6122	M	10
6123	K	13
6124	M	18
6125	K	11
6126	N	17
6127	O	17
6128	M	8
6129	K	3
6130	K	2
6131	K	4
6132	M	10
6133	I	11
6135	K	17
6157	D	17
6158	J	17
6161	D	16
6162	H	16
6180	M	16
6181	M	13
6182	M	15
6183	N	13

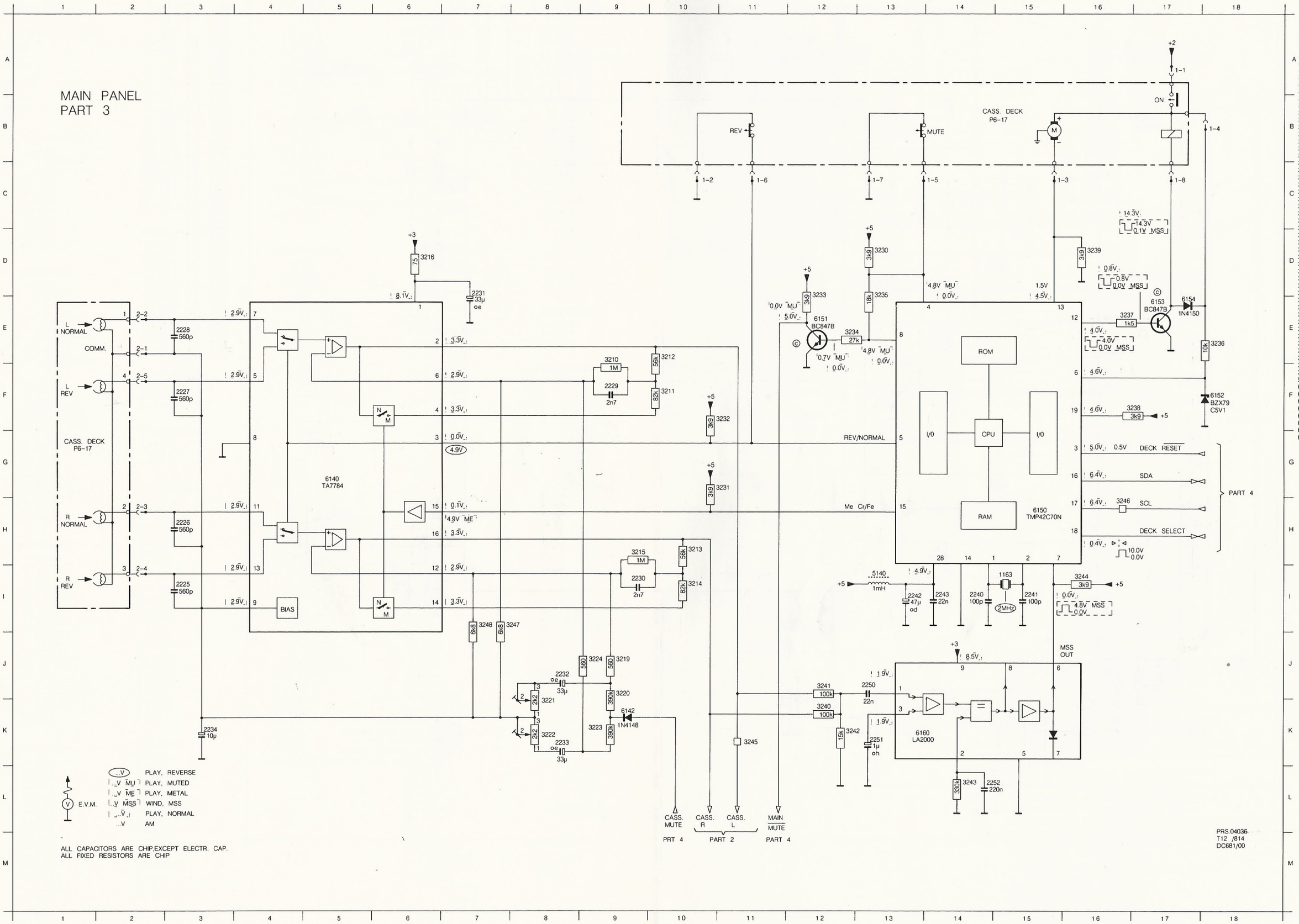
MAIN PANEL
PART 3
CASS. DECK
P6-17
REV
MUTE
ON
L NORMAL
COMM.
L REV
R NORMAL
R REV
6140
TA7784
BIAS
6150
TMP42C70N
ROM
CPU
RAM
I/O
REV/NORMAL
Me Cr/Fe
DECK RESET
SDA
SCL
DECK SELECT
PART 4
6151
BC847B
6153
BC847B
6154
1N4150
6152
BZX79
C5V1
6142
1N4148
6160
LA2000
MSS
OUT
CASS. MUTE
PART 4
CASS. R
CASS. L
PART 2
MAIN MUTE
PART 4
E.V.M.
PLAY, REVERSE
PLAY, MUTED
PLAY, METAL
WIND, MSS
PLAY, NORMAL
AM
ALL CAPACITORS ARE CHIP,EXCEPT ELECTR. CAP.
ALL FIXED RESISTORS ARE CHIP
PRS.04036
T12 /814
DC681/00

MAIN PANEL PART 4

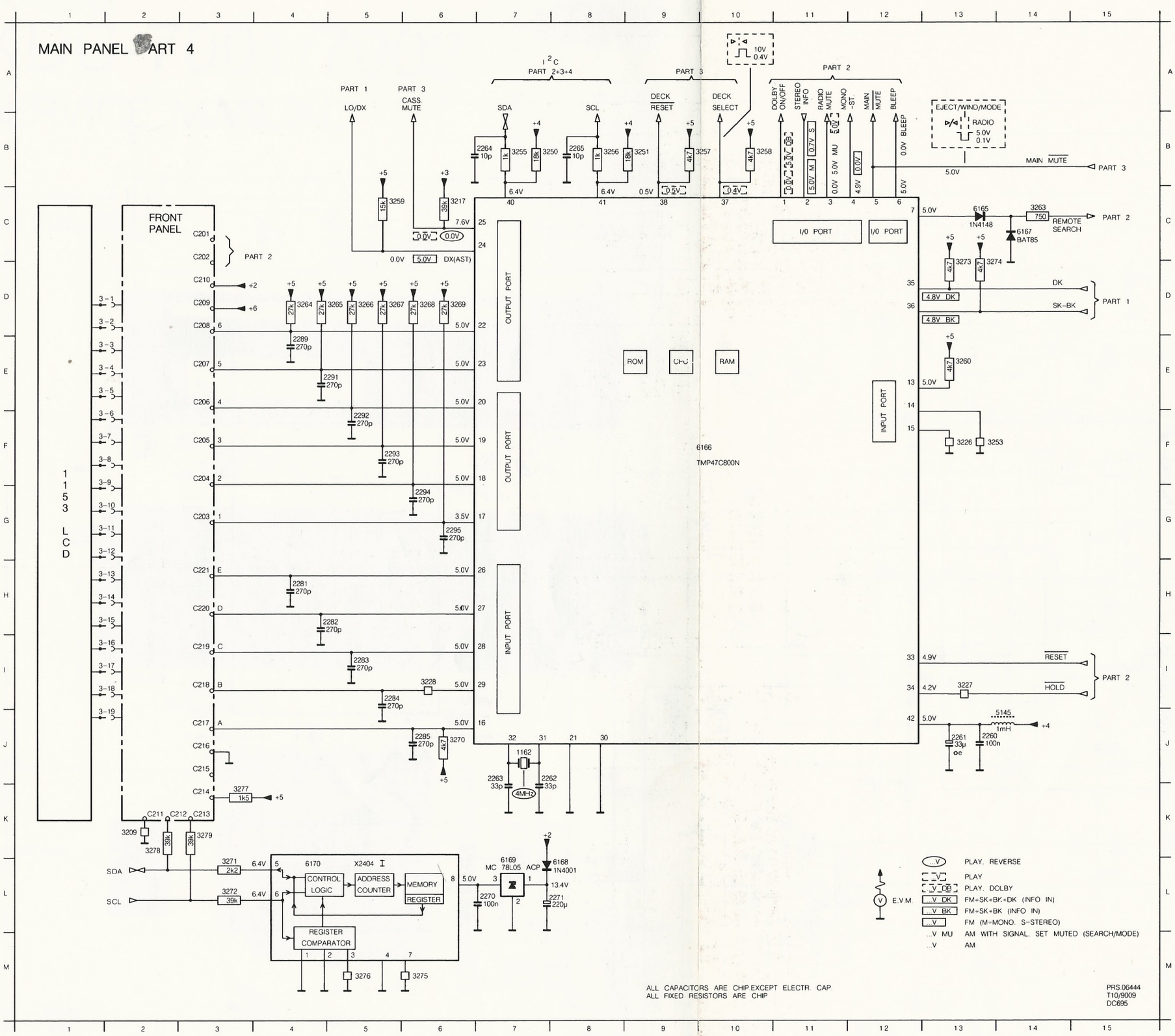

ALL CAPACITORS ARE CHIP EXCEPT ELECTR. CAP.
ALL FIXED RESISTORS ARE CHIP

PRS.06444
T10/9009
DC695

1162	J 7	
2260	J13	
2261	J13	
2262	J 8	
2263	J 7	
2264	B 7	
2265	B 8	
2270	L 7	
2271	L 8	
2281	H 4	
2282	H 5	
2283	I 5	
2284	I 5	
2285	J 6	
2289	E 4	
2291	E 5	
2292	F 5	
2293	F 5	
2294	G 6	
2295	G 6	
3209	K 2	
3217	C 6	
3226	F13	
3227	I 13	
3228	I 6	
3250	B 8	
3251	B 9	
3253	F13	
3255	B 7	
3256	B 8	
3257	B10	
3258	B10	
3259	C 5	
3260	E13	
3263	C14	
3264	D 4	
3265	D 5	
3266	D 5	
3267	D 5	
3268	D 6	
3269	D 6	
3270	J 6	
3271	L 3	
3272	L 3	
3273	D13	
3274	D14	
3275	M 6	
3276	M 5	
3277	K 3	
3278	K 2	
3279	K 3	
5145	J14	
6165	C13	
6166	F10	
6167	C14	
6168	L 8	
6169	L 7	
6170	L 4	

MAIN PANEL

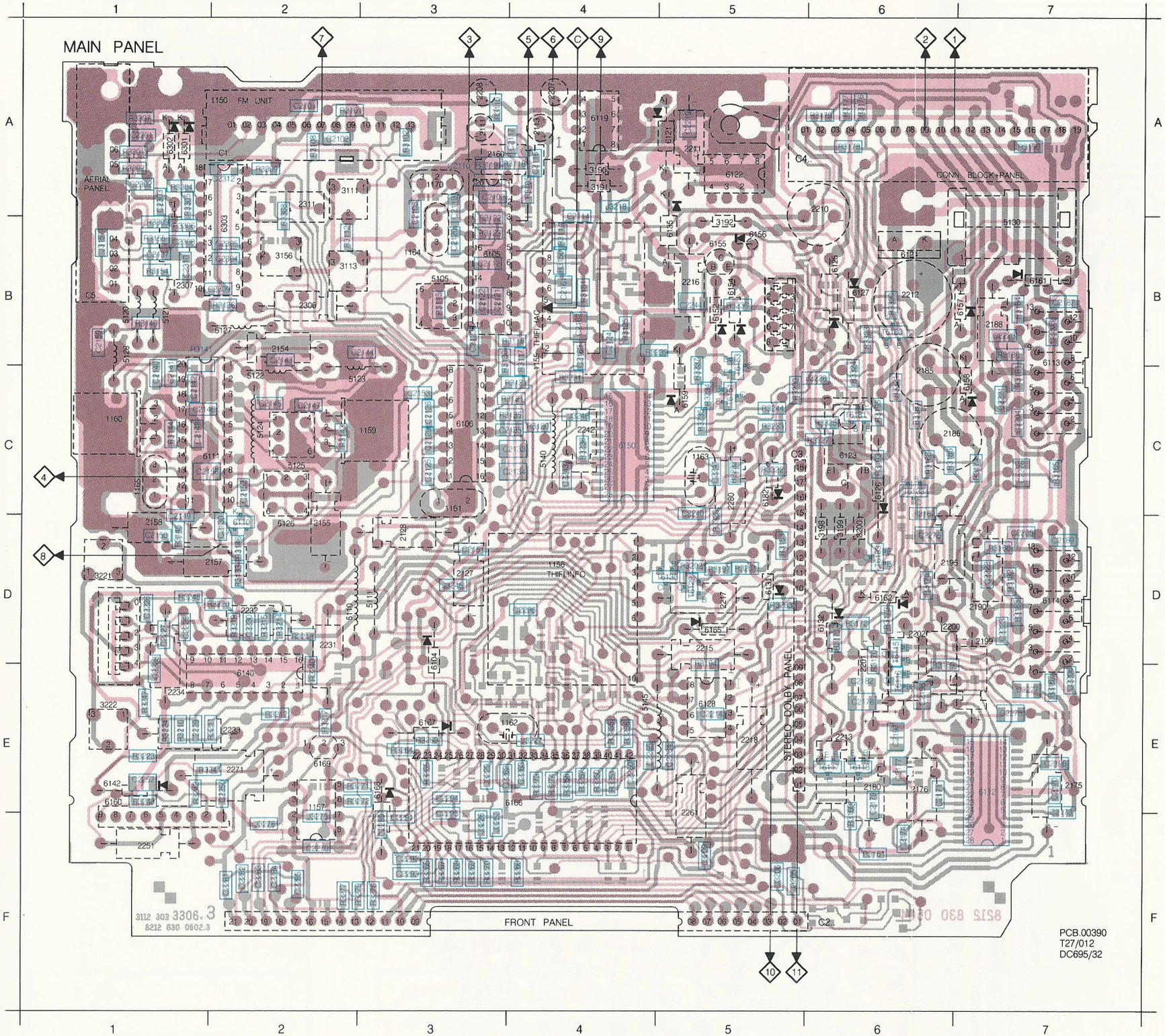

1150	A2	6165	D5	C2305	B2	R3255	E4
1154	A1	6166	E4	C2308	B1	R3256	E4
1155	B4	6167	E3	C2309	B2	R3257	E4
1156	D4	6168	E3	C2310	B1	R3258	E4
1157	E2	6169	E2	C2312	A2	R3259	E3
1159	C3	6182	C5	J3157	B1	R3260	F4
1160	C1	6301	A1	J3205	F5	R3263	D5
1161	C3	6302	A1	J3206	F5	R3264	E3
1162	E4	6303	B2	J3209	F5	R3265	E3
1163	C5	C2101	A2	J3218	A4	R3266	F3
1164	B3	C2102	A2	J3218	A4	R3267	F3
1165	C1	C2103	A3	J3226	F3	R3268	F3
1170	A3	C2106	A3	J3227	E4	R3269	F3
2111	A3	C2110	A3	J3228	C6	R3270	F3
2113	A4	C2112	B3	J3229	E3	R3271	E3
2127	D3	C2114	B4	J3245	D3	R3272	E3
2128	D3	C2116	A4	J3246	C4	R3273	E4
2154	B2	C2117	A4	J3253	F3	R3274	E4
2155	D2	C2119	A3	J3275	F2	R3277	F2
2157	D2	C2120	B3	J3276	F2	R3278	F3
2158	D1	C2121	B3	R3101	A2	R3279	F3
2160	A3	C2122	B3	R3102	A3	R3301	A1
2175	E7	C2123	B3	R3105	A4	R3302	A1
2176	E6	C2124	B4	R3108	A2	R3303	B1
2180	E6	C2125	C3	R3110	A3	R3304	A1
2185	C6	C2126	C3	R3112	B2	R3305	A1
2186	C6	C2129	C3	R3114	B4	R3306	B1
2188	B7	C2130	D2	R3115	B3	R3307	A1
2190	D7	C2133	C4	R3116	B4	R3308	B2
2195	D6	C2134	C4	R3117	B4	R3309	A2
2199	D7	C2135	C4	R3118	A4	R3320	B6
2200	D6	C2137	B1	R3119	A3	R3321	C6
2201	D6	C2140	C1	R3120	C4	R3322	C5
2202	D6	C2141	C1	R3121	C4	R3323	B6
2207	A4	C2142	C1	R3122	B3	R3324	C6
2208	A3	C2143	B2	R3123	B3	R3325	C6
2210	A6	C2144	B3	R3125	B4	R3326	D5
2211	A5	C2145	C2	R3130	B3	R3327	C6
2212	B6	C2146	C1	R3131	C4	T6115	D6
2213	E6	C2147	C2	R3133	D2	T6116	E6
2215	D5	C2148	C1	R3135	C4	T6117	E6
2216	B5	C2149	D1	R3136	B2	T6118	E6
2217	D5	C2150	D1	R3140	B1	T6129	D5
2218	E5	C2151	D3	R3141	C1	T6130	D5
2231	D2	C2152	C2	R3143	C2	T6133	C6
2232	D2	C2153	C3	R3144	C1	T6151	C5
2233	E2	C2156	C1	R3145	D1	T6153	C5
2234	E1	C2159	B1	R3146	D2	T6180	B6
2242	C4	C2161	B4	R3150	B4	T6181	C6
2251	F1	C2162	B4	R3151	B4	T6183	D6
2261	F5	C2163	B4	R3153	D5		
2271	E2	C2170	E7	R3154	B1		
2280	C5	C2171	E6	R3155	B1		
2306	B2	C2173	F7	R3160	F6		
2307	B1	C2174	F6	R3161	F6		
2311	A2	C2177	E6	R3162	D6		
3111	A2	C2178	E6	R3163	C6		
3113	B2	C2179	E6	R3164	B7		
3156	B2	C2182	E6	R3165	C7		
3190	A4	C2187	B7	R3166	D7		
3191	A4	C2189	D7	R3167	E7		
3192	B5	C2192	E7	R3168	C6		
3198	D6	C2193	D6	R3169	E6		
3199	D6	C2194	E7	R3170	D6		
3200	D6	C2196	E7	R3171	D6		
3221	D1	C2197	E6	R3172	D6		
3222	E1	C2198	E6	R3173	D6		
5105	B3	C2203	B7	R3174	C7		
5110	D2	C2204	C7	R3175	D6		
5111	D3	C2205	D7	R3176	A6		
5120	B1	C2206	E7	R3177	A6		
5121	B1	C2214	E5	R3178	A6		
5122	C2	C2219	A5	R3179	A6		
5123	C2	C2220	B7	R3180	B7		
5124	C2	C2221	C7	R3181	C7		
5125	C2	C2222	D7	R3182	D7		
5126	D2	C2223	D7	R3183	D7		
5127	B2	C2225	D1	R3186	C6		
5128	B1	C2226	D1	R3193	C6		
5130	B7	C2227	D1	R3194	E5		
5140	C4	C2228	E1	R3195	C6		
5145	E4	C2229	E1	R3196	A7		
6104	D3	C2230	D2	R3197	D5		
6105	B3	C2240	D5	R3201	D5		
6106	C3	C2241	C5	R3202	D5		
6110	D2	C2243	C4	R3210	E1		
6111	C2	C2244	B5	R3211	E2		
6112	E7	C2250	E2	R3212	E2		
6113	B7	C2252	E1	R3213	D2		
6114	D7	C2260	E4	R3214	D2		
6119	A4	C2262	E4	R3215	D2		
6121	A5	C2263	E4	R3217	E2		
6122	A5	C2264	E5	R3219	D2		
6123	C6	C2265	E4	R3220	D2		
6124	B6	C2270	F2	R3223	E1		
6125	B6	C2275	D6	R3224	E1		
6126	C6	C2276	C7	R3230	C5		
6127	B6	C2277	E7	R3231	C4		
6128	E5	C2278	E7	R3232	C5		
6131	D5	C2281	F2	R3233	C5		
6132	D6	C2282	F2	R3234	C5		
6135	B5	C2283	F2	R3235	C5		
6140	E2	C2284	F2	R3236	B5		
6142	E1	C2285	F2	R3237	C5		
6150	C4	C2289	F3	R3238	C4		
6152	B5	C2291	F3	R3239	B4		
6154	B5	C2292	F3	R3240	E2		
6155	B5	C2293	F3	R3241	E2		
6156	B5	C2294	E3	R3242	E1		
6157	B7	C2295	F3	R3243	E1		
6158	C7	C2296	D4	R3244	C5		
6159	C5	C2301	A1	R3247	E1		
6160	E1	C2302	A1	R3248	D1		
6161	B7	C2303	A1	R3250	E4		
6162	D6	C2304	B2	R3251	E4		

. . . V — position AM
. . . V* — position AM, with signal, set tuned
. . . V MU — position AM, with signal, set muted (search/mode)
[. . . V] — position FM M = Mono, S = Stereo
[. . . V*] — position FM, with signal, set tuned
[. . . V BK] — position FM + SK + BK (info in)
[. . . V DK] — position FM + SK + BK + DK (info in)
. . . V — position play, normal
(. . . V) — position play, reverse
. . . V MSS — position fast wind, MSS
. . . V ME — position play, METAL
. . . V DB — position play, DOLBY

1150 FM tuner

C101 = GND
C102 = –
C103 = GND
C104 = [0.0 V]
C105 = 0.1 V
[1.7 V]
C106 = [8.4 V]
C107 = [1.3 - 5.5 V] MP-7
C108 = 0.1 V
[1.4 V]
C109 = GND
C110 = [1.7 V]
C111 = [3.0 V]
C112 = 8.4 V
[0.2 V]
C113 = [1.8 V]

1155 Thi-Fi IAC

1 = N.C.
2 = 2.5 V
3 = N.C.
4 = [0.5 V]
[1.0 - 5.0 V*]
5 = 4.2 V
6 = 7.8 V
7 = 8.2 V
8 = GND

1156 Thi-Fi SDK

1 = GND
2 = [4.5 V]
3 = [4.8 V DK]
4 = N.C.
5 = [4.8 V BK]
6 = N.C.
7 = N.C.
8 = N.C.
9 = N.C.
10 = [8.5 V]

1601 Thi-Fi Stereo Decoder

1 = [5.0 VM]
[0.7 VS]
2 = 3.5 V
3 = 3.4 V
4 = 2.5 V
5 = 2.6 V
6 = GND
7 = 0.5 V
1.8 V*
8 = 8.3 V
9 = [1.0 V]
[5.0 V*]
10 = [0.5 V]
[4.6 V*]
11 = 4.9 V
[0.0 V]
12 = 3.5 V
13 = 0.0 V
5.0 V MU
14 = 5.0 V
0.0 V MU
15 = 3.4 V
16 = 2.6 V
17 = 3.4 V
18 = 3.4 V
19 = 3.4 V
20 = 3.4 V

1602 Thi-Fi Dolby B

1 = 0.0 V
5.0 V DB
2 = 4.2 V
3 = 4.2 V
4 = 3.4 V
5 = GND
6 = GND
7 = 3.4 V
8 = 4.2 V
9 = GND
10 = 8.4 V

6105 TEA6100

1 = 8.3 V
[8.2 V]
2 = 1.2 V
3 = [0.8 V] MP-5
[1.3 - 5.0 V*]
4 = [0.0 V]
5 = [0.6 V] MP-6
[0.1 V*]
6 = 40 kHz
7 = GND
8 = 8.3 V
9 = SCL (4.6 V)
10 = SDA (4.6 V)
11 = 4.1 V MP-3
[4.5 V]
12 = 4.6 V
13 = 4.6 V
14 = 2.4 V
15 = 4.4 V
16 = 3.0 V
17 = 3.0 V
18 = 3.0 V
19 = 3.0 V
20 = GND

6106 TSA6057

1 = 4 MHz
2 = 4 MHz
3 = 4.7 V
4 = GND
5 = [1.8 V]
6 = 1.8 V
7 = 1.8 V
8 = 7.6 V
[0.2 V]
9 = 40 kHz
10 = SDA (4.6 V)
11 = SCL (4.6 V)
12 = GND
13 = [1.3 - 5.5 V]
14 = [2.1 V]
15 = N.C.
16 = 8.5 V

6111 TEA6200

1 = 6.6 V
2 = 4.0 V
3 = 8.2 V
4 = 8.2 V
5 = 8.2 V
6 = 8.2 V
7 = 0.7 V
8 = 4.0 V
9 = 4.0 V
10 = 4.0 V
11 = 6.7 V
12 = 1.4 V MP-4
13 = 4.7 V
14 = 7.6 V
[0.2 V]
15 = 4.7 V
16 = 4.7 V
17 = GND
18 = 1.0 V
19 = 1.3 V
20 = 3.3 V

6112 TEA6310T

1 = SDA (6,4 V)
2 = GND
3 = 3.9 V
4 = 3.9 V
5 = 3.9 V
6 = 3.9 V
7 = 3.9 V
8 = N.C.
9 = 6.6 V
10 = N.C.
11 = 7.7 V
12 = N.C.
13 = N.C.
14 = 3.9 V
15 = 3.9 V
16 = N.C.
17 = N.C.
18 = GND
19 = N.C.
20 = 3.9 V
21 = GND
22 = 3.9 V
23 = 3.9 V
24 = 3.9 V
25 = 3.9 V
26 = 3.9 V
27 = 7.8 V
28 = SCL (6.4 V)

6113/6114 TDA1516Q

1 = 2.2 V
2 = 2.2 V
3 = GND
4 = 2.2 V
5 = 6.7 V
6 = 14.3 V
7 = GND
8 = 14.3 V
9 = 6.7 V
10 = 14.3 V
11 = 14.2 V
12 = 6.7 V
13 = 2.2 V

6115/6117 BC847B

e = 3.3 V
b = 3.9 V
c = 7.8 V

6116/6118 BC847B

e = 3.3 V
b = 1.8 V
c = 7.8 V

6119/6122 L4916

1 = 14.2 V
2 = 2.5 V
3 = N.C.
4 = 8.4 V
5 = GND
6 = GND
7 = GND
8 = GND

6123 BD438

e = 14.3 V
b = 13.6 V
c = 14.2 V

6128 L4904

1 = 12.8 V
2 = 8.4 V
3 = 5.6 V
4 = GND
5 = N.C.
6 = 4.2 V
7 = 5.0 V
8 = 5.0 V

6129 BC847B

e = GND
b = 0.6 V
c = 0.0 V

6130 BC847B

e = GND
b = 0.0 V
c = 4.9 V

6133 BC847B

e = GND
b = 0.7 V
c = 0.0 V

6140 TA7705P

1 = 8.1 V
2 = 3.3 V
3 = 0.0 V
4.9 V
4 = 3.3 V
5 = 2.9 V
6 = 2.9 V
7 = 2.9 V
8 = GND
9 = 2.9 V
10 = N.C.
11 = 2.9 V
12 = 2.9 V
13 = 2.9 V
14 = 3.3 V
15 = 0.1 V
4.9 V ME
16 = 3.3 V

6150 TMP42C70N

1 = 2 MHz
2 = 2 MHz
3 = 5.0 V
0.5 V
4 = 0.0 V
4.8 V MU
5 = 0.0 V
(4.9 V)
6 = 4.6 V
7 = 0.0 V
4.8 V MSS
0.0 V
8 = 0.0 V
4.8 V MU
9 = N.C.
10 = N.C.
11 = N.C.
12 = 4.0 V
4.0 V
0.0 V MSS
13 = 4.5 V
1.5 V
14 = GND
15 = 0.1 V
4.9 V ME
16 = SDA (6.4 V)
17 = SCL (6.4 V)
18 = 0.4 V
▷ ◁
10 V
0.4 V
19 = 4.6 V
20 = N.C.
21 = N.C.
22 = N.C.
23 = N.C.
24 = N.C.
25 = N.C.
26 = N.C.
27 = N.C.
28 = 4.9 V

6151 BC847B

e = GND
b = 0.0 V
0.7 V MU
c = 5.0 V
0.0 V MU

6153 BC847B

e = GND
b = 0.8 V
0.0 V MSS
c = 14.2 V MSS
0.1 V

6160 LA2000

1 = 1.9 V
2 = –
3 = 1.9 V
4 = N.C.
5 = GND
6 = 0.0 V
4.8 V MSS
0.0 V
7 = N.C.
8 = N.C.
9 = 8.5 V

6166 TMP47C 800 N

1 = 0.0 V
5.0 V DB
2 = [5.0 VM]
[7.0 VS]
3 = 0.0 V
5.0 V MU
5.0 V
4 = 4.9 V
[0.0 V]
5 = 5.0 V
5.0 V
0.1 V
▷/◁ A RADIO
A:EJECT/WIND/MODE
6 = 5.0 V
0.0 V BEEP
7 = 5.0 V
8 = N.C.
9 = N.C.
10 = N.C.
11 = N.C.
12 = N.C.
13 = 5.0 V
14 = GND
15 = GND
16 = 5.0 V
17 = 3.5 V
18 = 5.0 V
19 = 5.0 V
20 = 5.0 V
21 = GND
22 = 5.0 V
23 = 5.0 V
24 = 0.0 V
[5.0 V] DX (AST)
25 = 7.6 V
0.0 V
(0.0 V)
26 = 5.0 V
27 = 5.0 V
28 = 5.0 V
29 = 5.0 V
30 = GND
31 = 4 MHz
32 = 4 MHz
33 = 4.9 V
34 = 4.2 V
35 = [4.8 V DK]
36 = [4.8 V BK]
37 = [0.4 V]
10 V
0.4 V
▷ ◁
38 = 0.5 V
5.0 V
39 = N.C.
40 = SDA (6.4 V)
41 = SCL (6.4 V)
42 = 5.0 V

6169 MC78L05ACP

1 = 13.4 V
2 = GND
3 = 5.0 V

6170 X2404I

1 = GND
2 = GND
3 = GND
4 = GND
5 = SDA (6.4 V)
6 = SCL (6.4 V)
7 = GND
8 = 5.0 V

6180 BC857B

e = 14.3 V
b = 13.7 V
c = 14.3 V

6181 BC857B

e = 14.3 V
b = 13.9 V
c = 10.2 V

6183 BC847B

e = 0.0 V
b = 0.8 V
c = 0.2 V

6303 TEA6101

1 = 8.3 V
2 = 7.6 V
[0.2 V]
3 = 3.6 V
4 = 5.3 V
[5.2 V]
5 = 0.9 V
[0.6 V]
6 = 5.2 V
[5.3 V]
7 = N.C.
8 = N.C.
9 = N.C.
10 = 5.0 V
[5.3 V]
11 = 5.2 V
[6.2 V]
12 = 5.2 V
[5.4 V]
13 =
14 = 0.0 V
15 = 0.0 V
16 = 0.1 V
17 = N.C.
18 = 0.0 V

6601/6602 BC858B

e = 1.4 V
b = 0.8 V
1.3 V*
c = 1.4 V
0.0 V*

6604 BC847B

e = 0.0 V
b = [0.6 V]
[0.1 V*]
c = [1.0 V]
[5.0 V*]

6606/6607 BC847B

e = 1.9 V
b = 2.6 V
c = 5.5 V

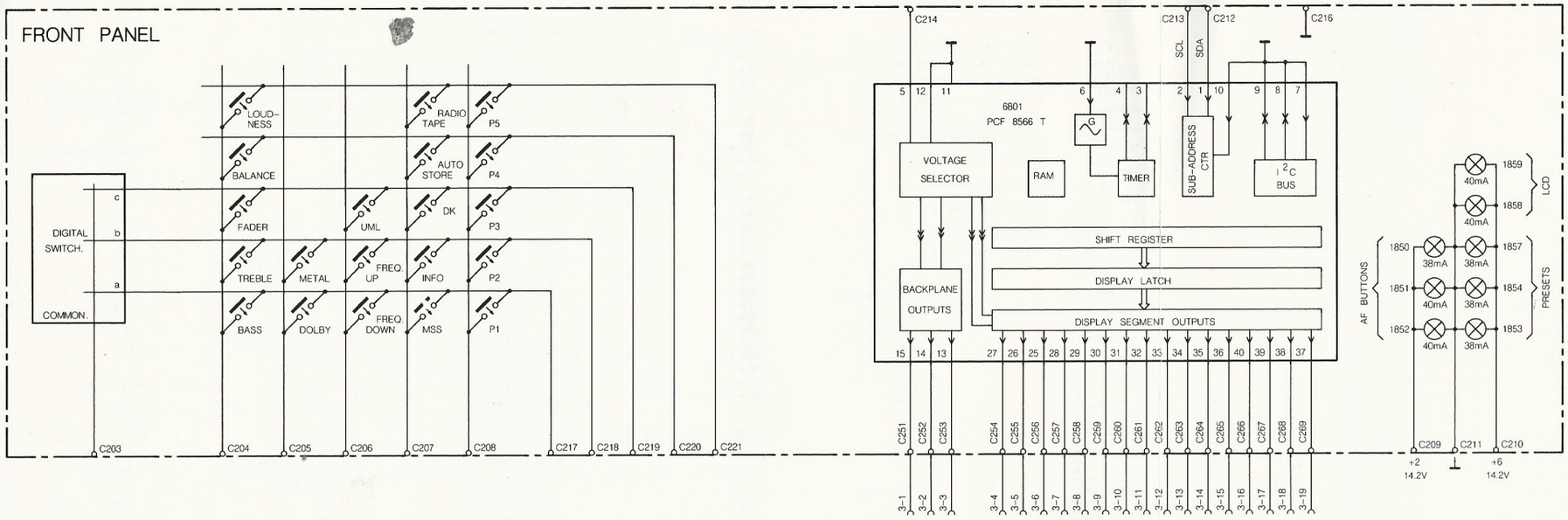

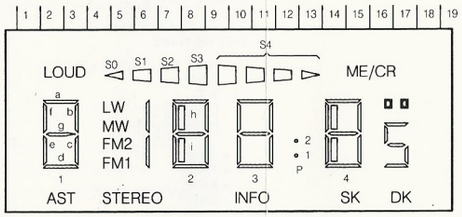

PRS.06441
T06-9006
DC695

L C D PINNING

DISPLAY PIN	1	2	3	4	5	6	7	8	9	10	11	12	13	14	15	16	17	18	19
COMMON A			COM A	L0	A1	B1	S0+S1	LW	S2+S3	F2	A2	B2	S4	A3	B3	F4	A4	B4	ME
COMMON B		COM B		F1	G1	C1	FM2+P2	MW	¦	H2+I2	G2	C2	F3	G3	C3	H4+I4	G4	C4	▫▫
COMMON C	COM C			E1	D1	AS	FM+P1	(FM) 1	ST	E2	D2	IN	E3	D3	SK	E4	D4	DK	5

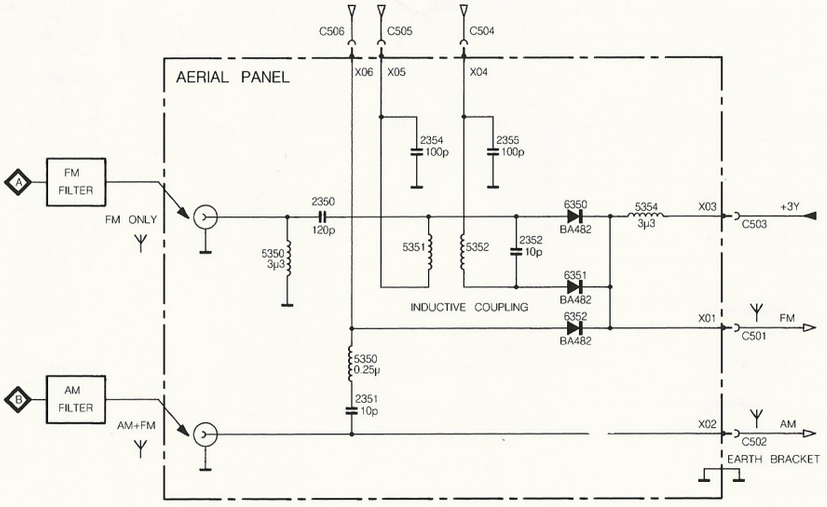

PRS.06445
T07-9012
DC695

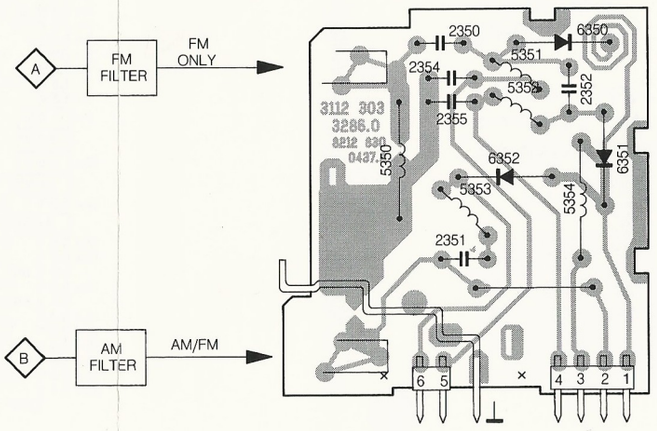

PCB.01343
T28/006
DC774
SCALE 1.3

FRONT PANEL

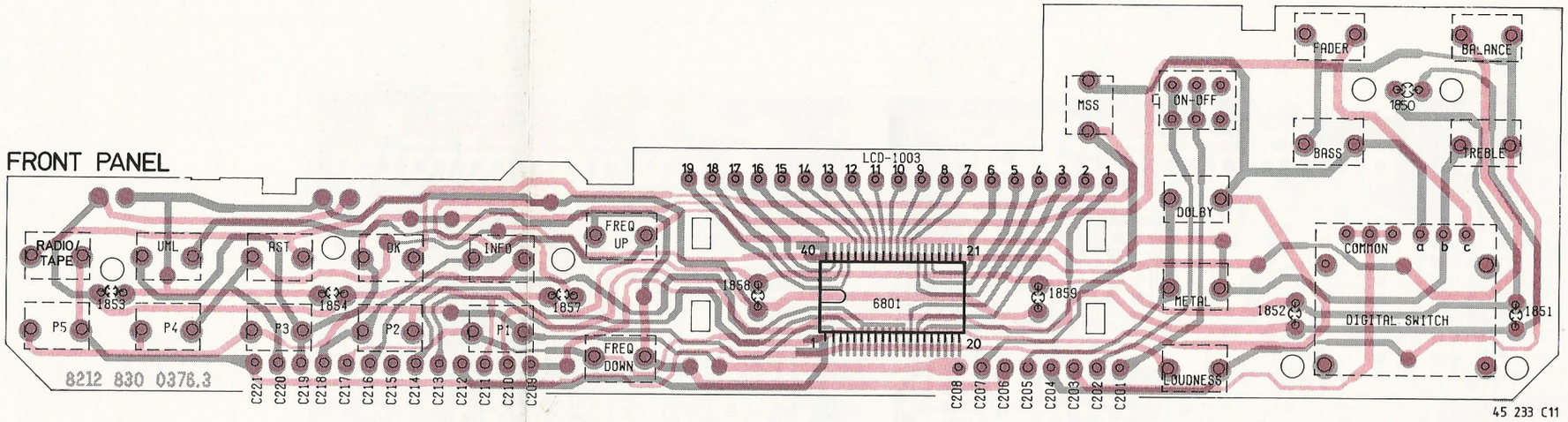

1601	B 3	2607	A 3	2616	A 1	3607	A 2	3615	A 3	3623	B 1	5602	A 1
1602	B 3	2608	B 3	2617	A 1	3608	A 2	3616	B 2	3624	A 1	6601	A 2
2601	B 2	2609	B 2	2618	A 3	3609	A 2	3617	B 2	3625	B 1	6602	A 2
2602	A 2	2611	B 2	2619	A 2	3610	A 2	3618	B 2	3626	A 1	6603	A 2
2603	A 2	2612	A 2	2620	A 2	3611	A 2	3619	A 1	3627	A 2	6604	B 2
2604	A 2	2613	B 1	3601	B 2	3612	A 3	3620	B 1	3628	A 1	6605	B 2
2605	A 2	2614	B 1	3602	A 2	3613	A 3	3621	A 1	3634	B 2	6606	B 1
2606	A 2	2615	A 1	3603	A 2	3614	A 3	3622	B 1	5601	B 1	6607	A 1

STEREO/DOLBY PANEL

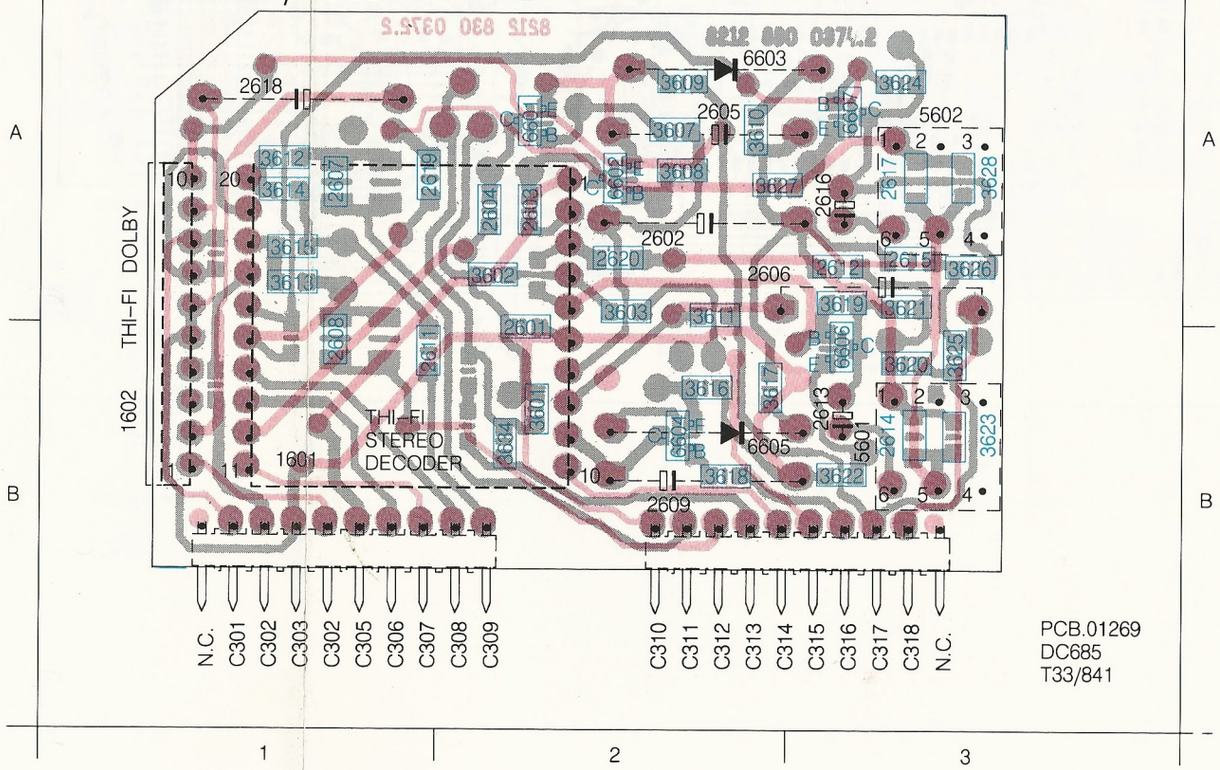

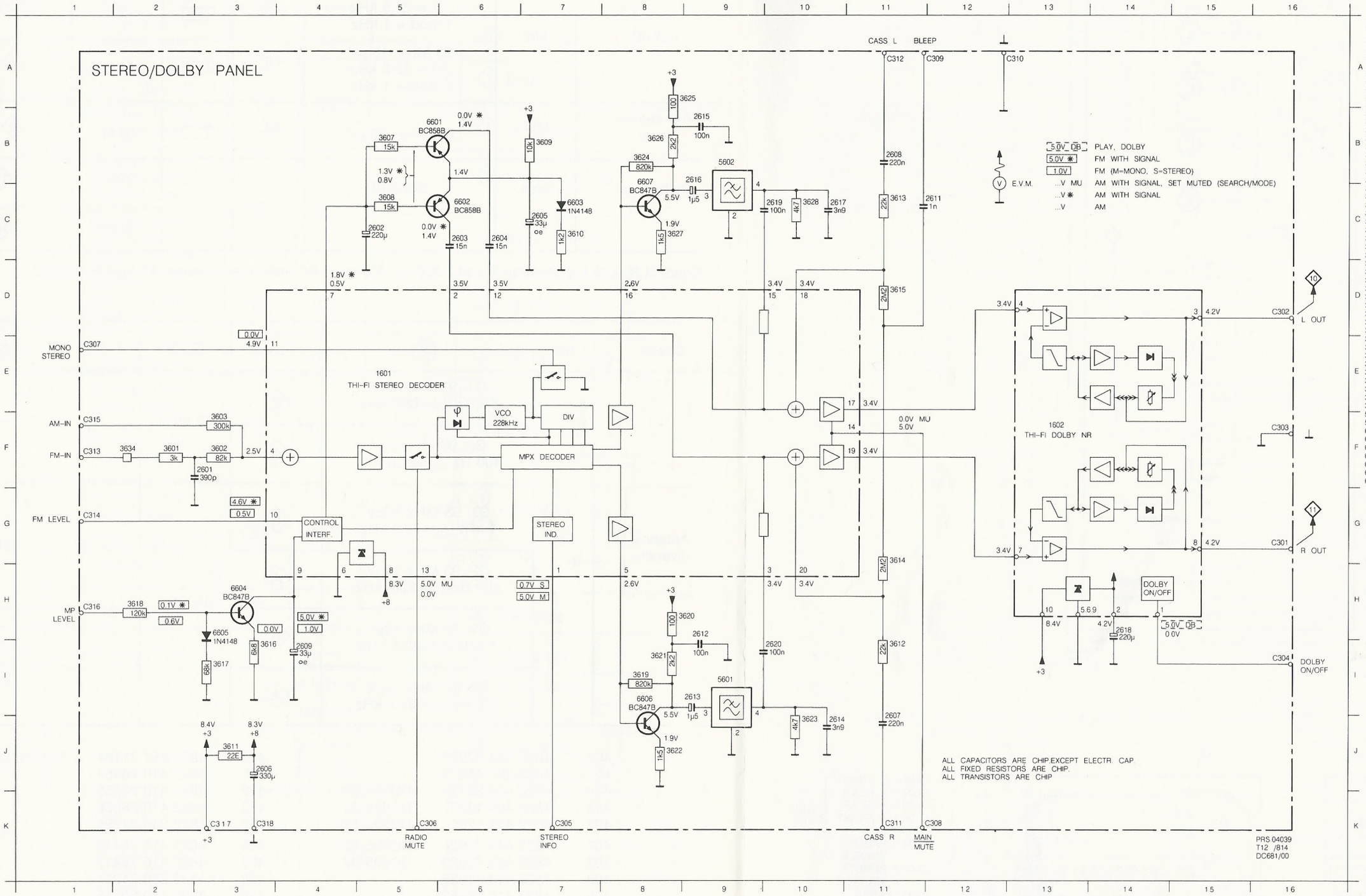

1601	E	5
1602	F	13
2601	F	3
2602	C	5
2603	C	6
2604	C	6
2605	C	7
2606	J	3
2607	J	11
2608	B	11
2609	I	4
2611	C	12
2612	H	9
2613	I	9
2614	J	10
2615	B	9
2616	B	9
2617	C	10
2618	H	14
2619	C	10
2620	I	10
3601	F	2
3602	F	3
3603	F	3
3607	B	5
3608	C	5
3609	B	7
3610	C	7
3611	J	3
3612	I	11
3613	C	11
3614	G	11
3615	D	11
3616	I	3
3617	I	3
3618	H	2
3619	I	8
3620	H	9
3621	I	8
3622	J	8
3623	J	10
3624	B	8
3625	A	9
3626	B	8
3627	C	8
3628	C	10
3634	F	2
5601	I	9
5602	B	9
6601	B	5
6602	C	6
6603	C	7
6604	H	3
6605	H	3
6606	I	8
6607	B	8

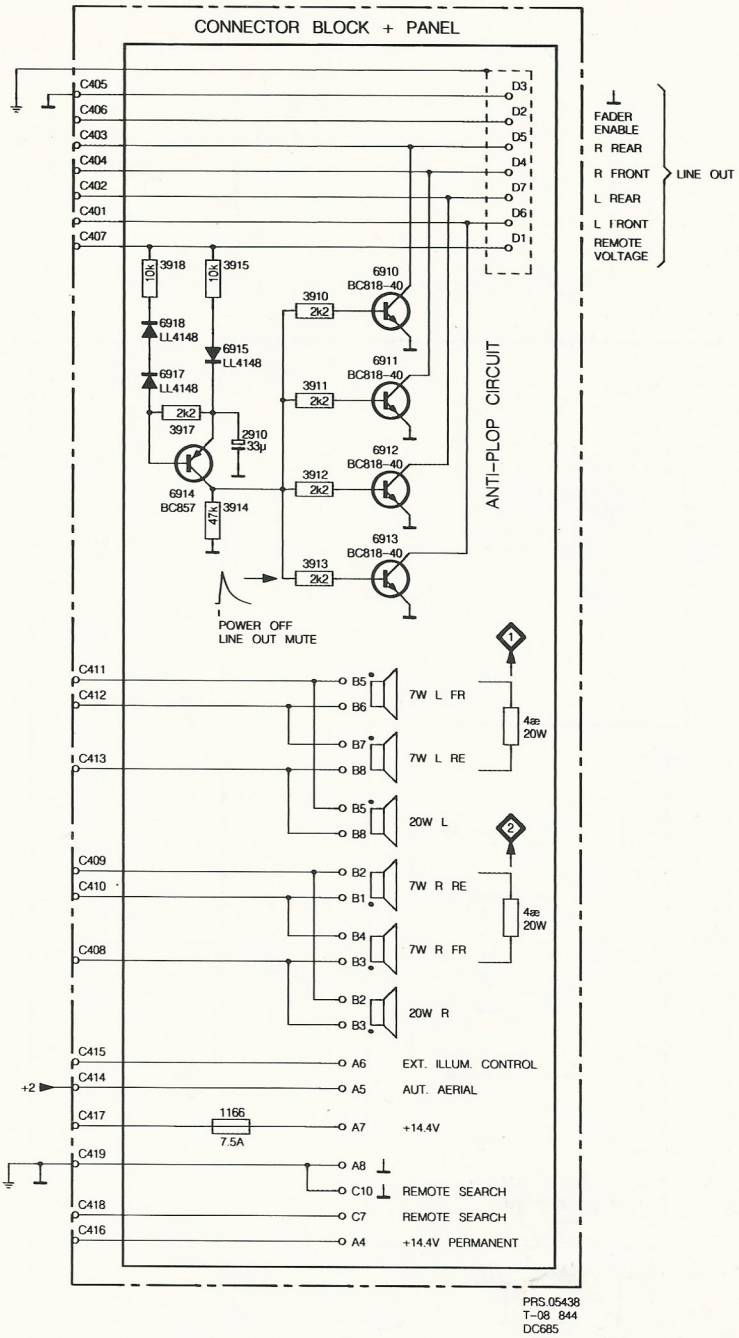

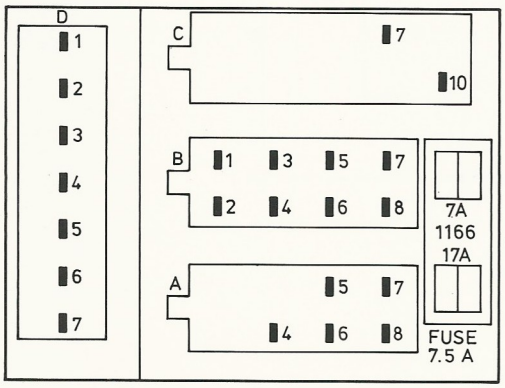

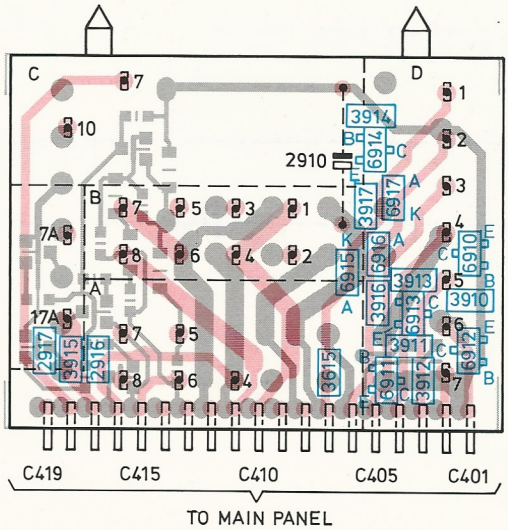

C401 = L FRONT
C402 = L REAR
C403 = R REAR
C404 = R FRONT
C405 = GND
C406 = FADER ENABLE
} LINE OUT

C407 = REMOTE VOLTAGE
C408 = +RFR
C409 = −RRE
C410 = −RFR/+RRE
C411 = −LRE
C412 = −LFR/+LRE
C413 = +LFR
} 🔊

C414 = AUT. AERIAL
C415 = EXT. ILLUM.
C416 = +14.4V DIRECT
C417 = +14.4V SWITCHED
C418 = REMOTE SEARCH
C419 = GND

44 005 B12

CS 28 563

For adjusting and checking see general procedures

Adjustment	SK					
Quadrature detector	FM	93 MHz, 10 µV △f = 75 kHz	B		5105	$V_R \leqslant$ 125 mV DC [1]
α-3 dB	FM	93 MHz, 1 mV △f = 22.5 kHz f mod = 1 kHz	B			1 0 dB (775 mV)
		93 MHz, 15 µV △f = 22.5 kHz f mod = 1 kHz	B		3113	1 -3 dB
AM-search level	MW	990 kHz, 70 µV	A		3111	6 2.0 V DC
Dolby level	Cass.	SBC419			3221	11 445 mV
					3222	10 445 mV

[1] Connect R = 15 kΩ between 1 and 2 IC6105. Connect DC voltmeter between 11 and 15 IC6105.

Check	SK				
Antenna diversity	FM	G1: 93 MHz 3µV 1 kHz △f=22,5 kHz	B	93 MHz	G1 ↔ G2
		G2: 93 MHz 3µV 400 Hz △f=22,5 kHz	A		
		G1: 93 MHz 30µV 1 kHz △f=22,5 kHz	B	93 MHz	G1
		G2: 93 MHz 10µV 400 Hz △f=22,5 kHz	A		
		G1: 93 MHz 10µV 1 kHz △f=22,5 kHz	B		$t_{G1 \rightarrow G2} \approx$ 200 msec.
		G2: 93 MHz 30µV 400 Hz △f=22,5 kHz	A		

402	4822 443 62977	
403	4822 492 41276	
404	4822 404 20437	DC695/32
406	4822 454 12577	DC695/32
406	4822 454 12555	DC695/32R
407	4822 443 62924	DC695/32R
407	4822 443 62923	DC695/32
408	4822 413 31535	
409	4822 410 26952	
411	4822 454 12554	
412	4822 410 26409	
414	4822 410 26411	
416	4822 462 71496	
418	4822 410 26688	
419	4822 410 26806	
422	4822 276 12404	
424	4822 443 30463	DC695/32
425	4822 321 10551	
426	4822 492 63822	DC695/32
428	4822 290 60719	
430	4822 267 31164	DC695/32
431	4822 410 26954	
432	4822 410 26955	
433	4822 410 26956	
434	4822 256 91295	
436	4822 410 26412	
437	4822 410 26413	
438	4822 256 91296	
439	4822 410 60215	
440	4822 267 31028	
441	4822 276 11517	
442	4822 276 12405	
443	4822 413 70265	
445	4822 462 71618	
446	4822 492 70135	
447	4822 256 91563	
449	4822 218 10282	
508	4822 267 50872	
509	4822 267 40818	

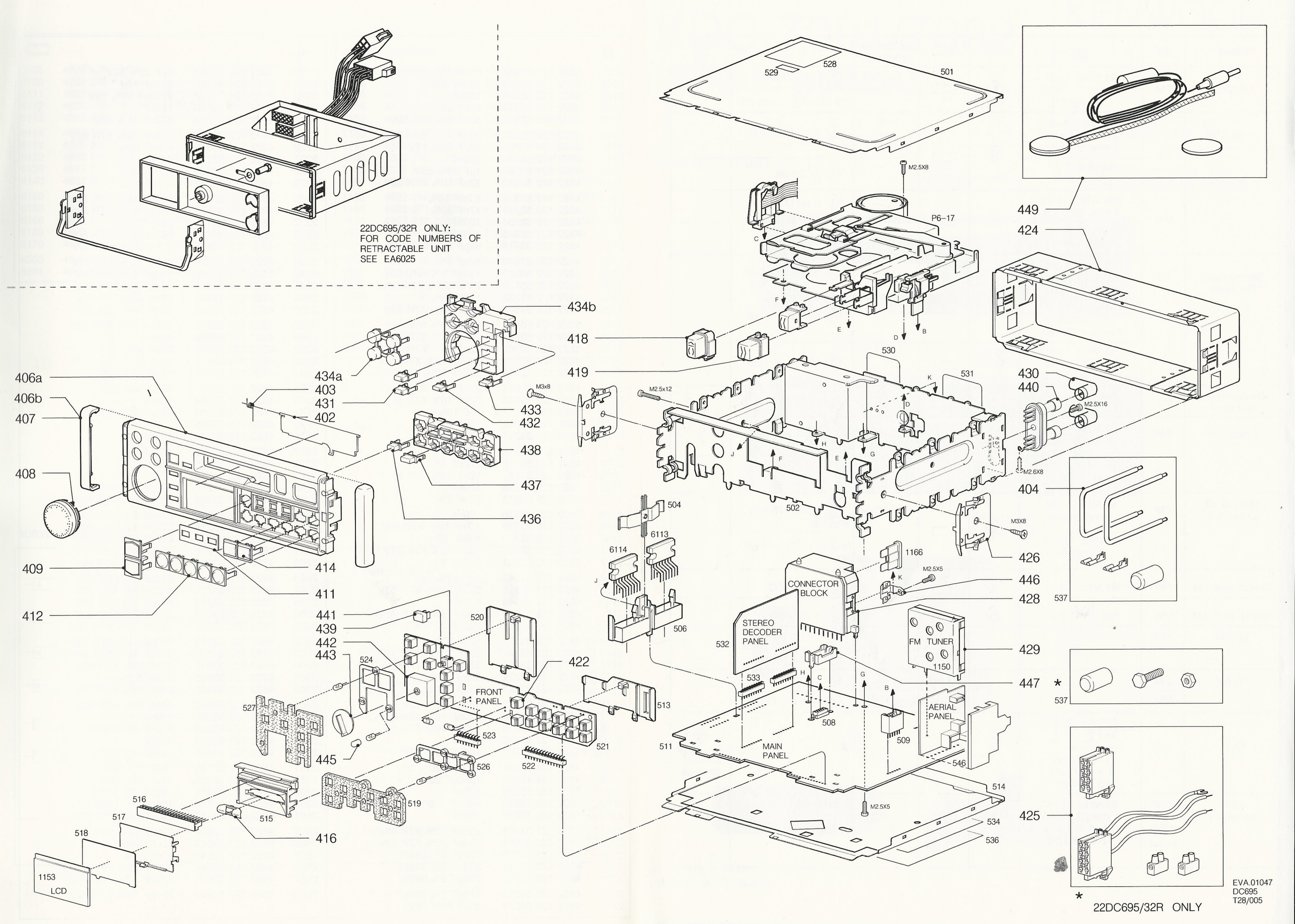
22DC695/32R ONLY:
FOR CODE NUMBERS OF
RETRACTABLE UNIT
SEE EA6025
529
528
501
M2.5X8
P6-17
449
424
434b
418
419
434a
403
431
402
433
432
438
437
436
406a
406b
407
408
409
412
414
411
M3x8
M2.5x12
530
531
430
440
M2.5X16
M2.6X8
404
502
504
6113
6114
506
M3X8
426
1166
M2.5X5
446
428
CONNECTOR
BLOCK
STEREO
DECODER
PANEL
532
533
FM TUNER
1150
429
447
537
*
520
441
439
442
443
524
422
FRONT
PANEL
527
523
521
513
445
526
522
508
509
AERIAL
PANEL
511
MAIN
PANEL
546
514
M2.5X5
534
536
425
516
517
518
515
519
416
1153
LCD
EVA.01047
DC695
T28/005
*
22DC695/32R ONLY

Check	SK				Setting of controls		
FM-Mute	FM	93 MHz, 1 mV	B			1 0 dB (775 mV)	
		no signal				–28 dB ≤ 1 ≤ –38 dB	
26 dB-SNR	FM	93 MHz, 6 µV △f = 22.5 kHz f mod = 1 kHz	B			1 0 dB (775 mV)	
		93 MHz, 6 µV without mod.				1 ≥ 26 dB	
	MW	990 kHz, 110 µV 1 kHz, 30% AM	A			1 0 dB (775 mV)	
		990 kHz, 110 µV without mod.				1 ≥ 26 dB	
Demodulated FM-levels	FM	93 MHz. 1 mV △f = 22.5 kHz f mod = 1 kHz	B			3 200 mV ±1 dB	
		93 MHz, 1 mV △f = 6.75 kHz f mod. = 19 kHz				3 50 mV ± 1 dB	
		93 MHz, 1 mV △f = 3.75 kHz f mod. = 57 kHz	B			3 20 mV ± 1 dB	
Demodulated AM-level	MW	990 kHz, 1 mV 1 kHz, 30% AM	A			4 350 mV ± 1 dB	
Cross talk	FM	93 MHz, 1 mV stereo signal	B		+	L 1 R 2 0 dB (775 mV)	
		93 MHz, 1 mV stereo-R				R 2 - L 1 ≥ 21 dB	
SDS/10 dB Cross talk	FM	93 MHz, 1 mV stereo signal	B		+	L 1 R 2 0 dB (775 mV)	
		93 MHz, 140 µV stereo-R				R 2 - L 1 = 10 dB	
Search level FM	FM	93 MHz, 30 µV	B			5 2.25 V-DC	
Search level AM	MW	990 kHz, 70 µV	A			6 1.75 V-DC	
VC-FM	FM			87.5 MHz		7 ≥ 1.0 V-DC	
				108 MHz		7 ≤ 6.0 V-DC	
VC-AM	LW			144 kHz		8 ≥ 0.8 V-DC	
	MW			1611 kHz		8 ≤ 6.0 V-DC	
I.A.C.	FM	τ Vp T τ = 10 µsec T = 300 µsec Vp = 60 mV	C				9 25-50 µs
SDK-sensitivity	FM + INFO	93 MHz, 20 µV △f = 22.5 kHz f mod. = 1 kHz +SK+BK+DK	B		min.	**INFO SK** in display + DK signal 1	

2101	4822 122 33343	22nF 10% X7R 63V
2102	4822 122 33345	100nF 20%
2102	4822 122 33236	100nF
2103	4822 122 33344	47nF 20%
2106	4822 122 33515	82nF 5% NP0 50V
2110	4822 122 33343	22nF 10% X7R 63V
2111	4822 124 23281	33µF 20% 16V
2112	4822 122 33236	100nF
2113	4822 124 23282	1µF 20% 50V
2114	4822 122 33343	22nF 10% X7R 63V
2116	4822 122 33336	8,2nF 10%
2117	4822 122 33344	47nF 20%
2120	4822 122 33236	100nF
2120	4822 122 33345	100nF 20%
2121	4822 122 33514	68pF 5% NP0 50V
2122	4822 122 33633	82pF 5%
2123	4822 122 33283	150pF 5% NP0 50V
2124	4822 122 33176	2,7nF 20% X7R 50V
2125	4822 122 33283	150pF 5%
2126	4822 122 33343	22nF 10% X7R 63V
2127	5322 124 10512	68µF 20% 16V
2129	4822 122 33343	22nF 10% X7R 63V
2130	4822 122 33343	22nF 10% X7R 63V
2133	4822 122 32916	220nF 10% X7R 63V
2134	4822 122 32916	220nF 10% X7R 63V
2135	4822 122 33343	22nF 10% X7R 63V
2137	4822 122 33343	22nF 10% X7R 63V
2140	5322 122 31647	1nF 10%
2141	4822 122 33212	10pF
2142	4822 122 33215	33pF 5%
2143	4822 122 33216	270pF 5%
2144	4822 122 33216	270pF 5%
2145	4822 122 33177	10nF 20% X7R 50V
2146	4822 122 33236	100nF
2147	4822 122 33213	22pF 5%
2148	4822 122 33236	100nF
2149	4822 122 33339	4,7nF 10% X7R 50V
2150	4822 122 33219	1.8nF 10%
2151	4822 122 33342	33nF 10% X7R 63V
2152	4822 122 33283	150pF 5%
2153	5322 122 31647	1nF 10%
2156	4822 122 32916	220nF 10% X7R 63V
2159	4822 122 33546	4.7pF
2161	4822 122 32916	220nF 10% X7R 63V
2162	4822 122 32916	220nF 10% X7R 63V
2163	4822 122 33177	10nF 20%
2170	4822 122 33342	33nF 10% X7R 63V
2171	4822 122 33342	33nF 10% X7R 63V
2173	4822 122 33221	5.6nF 10%
2174	4822 122 33221	5.6nF 10%
2175	5322 124 21762	100µF 20% 10V
2177	4822 122 32916	220nF 10% X7R 63V
2178	4822 122 32916	220nF 10% X7R 63V
2179	4822 122 33236	100nF
2180	5322 124 21762	100µF 20% 10V
2185	4822 124 40184	1000µF 20% 10V
2186	4822 124 40184	1000µF 20% 10V
2187	4822 122 33236	100nF
2189	4822 122 33236	100nF
2196	4822 122 33236	100nF
2197	4822 122 32916	220nF 10% X7R 63V
2198	4822 122 32916	220nF 10% X7R 63V
2203	4822 122 33216	270pF 5% 0805T
2204	4822 122 33216	270pF 5% 0805T
2205	4822 122 33216	270pF 5% 0805T
2206	4822 122 33216	270pF 5% 0805T
2207	4822 124 23279	22µF 20% 16V

2208	4822 124 23282	1µF 20% 50V
2210	4822 124 40196	220µF 16V
2212	4822 124 22412	2200µF 20% 16V
2214	4822 122 33236	100nF
2217	4822 121 51264	470nF 10% 50V
2219	4822 122 32916	220nF 10% X7R 63V
2220	4822 122 33339	4.7nF 10%
2221	4822 122 33339	4.7nF 10%
2222	4822 122 33339	4.7nF 10%
2223	4822 122 33339	4.7nF 10%
2225	4822 122 33173	560pF 10% X7R 50V
2226	4822 122 33173	560pF 10% X7R 50V
2227	4822 122 33173	560pF 10%
2228	4822 122 33173	560pF 10% X7R 50V
2229	4822 122 33176	2,7nF 20% X7R 50V
2230	4822 122 33176	2,7nF 20% X7R 50V
2240	5322 122 32531	100pF 5% NP0 50V
2241	5322 122 32531	100pF 5% NP0 50V
2243	4822 122 33343	22nF 10% X7R 63V
2250	4822 122 33343	22nF 10% X7R 63V
2252	4822 122 32916	220nF 10% X7R 63V
2260	4822 122 33236	100nF
2262	4822 122 33215	33pF 5%
2263	4822 122 33215	33pF 5%
2264	4822 122 31971	10pF 10% 50V
2265	4822 122 31971	10pF 10% 50V
2270	4822 122 33236	100nF
2271	4822 124 22505	220µF 20% 16V
2275	4822 122 33236	100nF
2276	4822 122 33236	100nF
2277	4822 122 33236	100nF
2278	4822 122 33236	100nF
2281	4822 122 33216	270pF 5% NP0 50V
2282	4822 122 33216	270pF 5% NP0 50V
2283	4822 122 33216	270pF 5% NP0 50V
2284	4822 122 33216	270pF 5% NP0 50V
2285	4822 122 33216	270pF 5% NP0 50V
2289	4822 122 33216	270pF 5% NP0 50V
2291	4822 122 33216	270pF 5% NP0 50V
2292	4822 122 33216	270pF 5% NP0 50V
2293	4822 122 33216	270pF 5% NP0 50V
2294	4822 122 33216	270pF 5% NP0 50V
2295	4822 122 33216	270pF 5% NP0 50V
2296	4822 122 33216	270pF 5% NP0 50V
2301	4822 122 33173	560pF 10% X7R 50V
2302	4822 122 33173	560pF 10% X7R 50V
2303	4822 122 33173	560pF 10% X7R 50V
2304	4822 122 33342	33nF 10% X7R 63V
2305	4822 122 33585	3,3nF 10%
2308	4822 122 33342	33nF 10% X7R 63V
2309	4822 122 33342	33nF 10% X7R 63V
2310	4822 122 33236	100nF
2311	4822 121 43525	470nF 10% 100V
2312	4822 122 33236	100nF
2350	4822 122 31348	120pF 2% 100V
2351	4822 122 32185	10pF 2% 100V
2352	4822 122 32185	10pF 2% 100V
2354	4822 122 31316	100pF 2% 100V
2355	4822 122 31316	100pF 2% 100V
2601	4822 122 33172	390pF 5% NP0 50V
2602	4822 124 22428	220µF 20% 10V
2603	4822 122 33543	15nF 10%
2604	4822 122 33543	15nF 10%
2606	4822 124 22504	330µF 20% 10V
2607	4822 122 32916	220nF 10% X7R 63V
2608	4822 122 32916	220nF 10% X7R 63V

2611	5322 122 31647	1nF 10% X7R 63V
2612	4822 122 33236	100nF
2613	4822 124 40243	1,5µF 20% 63V
2614	4822 122 31811	3900pF 10% 50V
2615	4822 122 33236	100nF
2616	4822 124 40243	1,5µF 20% 63V
2617	4822 122 31811	3900pF 10% 50V
2618	4822 124 22428	220µF 20% 10V
2619	4822 122 33236	100nF
2620	4822 122 33236	100nF
2915	4822 122 31811	3900pF 10% 50V
2916	4822 122 31811	3900pF 10% 50V
2917	4822 122 31811	3900pF 10% 50V

3101	4822 111 91517	10k 5% 0,1W
3102	4822 116 90339	220E 5%
3104	4822 111 91536	0E JUMPER
3105	4822 111 91498	15k 5% 0,1W
3108	4822 111 91534	5k6 5% 0,06W
3110	4822 116 90457	10E 5% 0,1W
3111	4822 100 20166	10k 30% LIN 0,1W
3112	4822 111 91449	2k7 5%
3113	4822 100 20166	10k 30% LIN 0,1W
3114	4822 116 90457	10E 5%
3115	4822 111 91526	3k3 5%
3116	4822 111 91522	2k2 5%
3117	4822 116 90445	39k 5%
3118	4822 116 80888	750E 5%
3119	4822 111 91532	4k7 5%
3120	4822 111 91498	15k 5% 0,1W
3121	4822 111 91521	18k 5% 0,1W
3122	4822 111 91516	1k 5%
3123	4822 111 91501	330E 5%
3125	4822 116 90339	220E 5%
3130	4822 116 90445	39k 5%
3131	4822 116 90445	39k 5%
3133	4822 111 91532	4k7 5%
3135	4822 111 91532	4k7 5%
3136	4822 111 91523	22k 5%
3140	4822 111 91533	560E 5%
3141	4822 116 90446	470E 5%
3143	4822 111 91516	1k 5%
3144	4822 111 91516	1k 5%
3145	4822 111 91523	22k 5%
3146	4822 116 80881	220k 5%
3150	4822 116 90457	10E 5%
3151	4822 111 91503	620k 5%
3153	4822 116 90338	1k5 5%
3154	4822 111 91516	1k 5% 0,1W
3155	4822 111 91516	1k 5% 0,1W
3156	4822 100 20166	10k 30% LIN 0,1W
3157	4822 111 91536	0E JUMPER
3160	4822 111 91532	4k7 5%
3161	4822 116 90445	39k 5%
3162	4822 111 91526	3k3 5%
3163	4822 111 91522	2k2 5%
3164	4822 111 91498	15k 5%
3165	4822 111 91498	15k 5%
3166	4822 111 91498	15k 5%
3167	4822 111 91498	15k 5%
3168	4822 111 91523	22k 5%
3169	4822 111 91527	3k9 5%
3170	4822 116 90347	68k 5%
3171	4822 111 91527	3k9 5%
3172	4822 116 90347	68k 5%
3173	4822 111 91517	10k 5%

3174	4822 116 90347	68k 5%
3175	4822 116 90347	68k 5%
3176	4822 111 91498	15k 5%
3177	4822 111 91498	15k 5%
3178	4822 111 91498	15k 5%
3179	4822 111 91498	15k 5%
3180	4822 116 80464	4E7 10% 0,6W
3181	4822 116 80464	4E7 10% 0,6W
3182	4822 116 80464	4E7 10% 0,6W
3183	4822 116 80464	4E7 10% 0,6W
3186	4822 116 90445	39k 5%
3193	4822 111 91517	10k 5%
3194	4822 111 91517	10k 5%
3195	4822 116 90339	220E 5%
3196	4822 116 90339	220E 5%
3197	4822 111 91517	10k 5%
3201	4822 111 91518	100k 5%
3202	4822 111 91518	100k 5%
3204	4822 111 91516	1k 5%
3205	4822 111 91536	0E JUMPER
3206	4822 111 91536	0E JUMPER
3209	4822 111 91536	0E JUMPER
3210	4822 111 91651	1M 10%
3211	4822 111 91507	82k 5%
3212	4822 051 20563	56k 5%
3213	4822 051 20563	56k 5%
3214	4822 111 91507	82k 5%
3215	4822 111 91651	1M 10%
3216	4822 111 91506	75E 5%
3217	4822 116 90445	39k 5%
3218	4822 111 91536	0E JUMPER
3219	4822 111 91533	560E 5%
3220	4822 111 91529	390k 5%
3221	4822 100 11212	2k2 30%
3222	4822 100 11212	2k2 30%
3223	4822 111 91529	390k 5%
3224	4822 111 91533	560E 5%
3226	4822 111 91536	0E JUMPER
3227	4822 111 91536	0E JUMPER
3228	4822 111 91536	0E JUMPER
3229	4822 111 91536	0E JUMPER
3230	4822 111 91527	3k9 5%
3231	4822 111 91527	3k9 5%
3232	4822 111 91527	3k9 5%
3233	4822 111 91527	3k9 5%
3234	4822 116 90342	27k 5% 0805T
3235	4822 111 91521	18k 5%
3236	4822 111 91517	10k 5%
3237	4822 116 90338	1k5 5%
3238	4822 111 91527	3k9 5%
3239	4822 111 91527	3k9 5%
3240	4822 111 91518	100k 5%
3241	4822 111 91518	100k 5%
3242	4822 111 91498	15k 5%
3243	4822 111 91529	390k 5%
3244	4822 111 91527	3k9 5%
3245	4822 111 91536	0E JUMPER
3246	4822 111 91536	0E JUMPER
3247	4822 111 91534	5k6 5%
3248	4822 111 91534	5k6 5%
3250	4822 111 91521	18k 5%
3251	4822 111 91521	18k 5%
3253	4822 111 91536	0E JUMPER
3255	4822 111 91516	1k 5%
3256	4822 111 91516	1k 5%
3257	4822 111 91532	4k7 5%
3258	4822 111 91532	4k7 5%

3259	4822 111 91498	15k 5%
3260	4822 111 91532	4k7 5%
3263	4822 116 80888	750E 5% 0,1W
3264	4822 116 90342	27k 5%
3265	4822 116 90342	27k 5%
3266	4822 116 90342	27k 5%
3267	4822 116 90342	27k 5%
3268	4822 116 90342	27k 5%
3269	4822 116 90342	27k 5%
3270	4822 111 91532	4k7 5%
3271	4822 111 91522	2k2 5%
3272	4822 116 90445	39k 5%
3273	4822 111 91532	4k7 5%
3274	4822 111 91532	4k7 5%
3275	4822 111 91536	0E JUMPER
3276	4822 111 91536	0E JUMPER
3277	4822 116 90338	1k5 5%
3278	4822 116 90445	39k 5%
3279	4822 116 90445	39k 5%
3301	4822 111 91516	1k 5% 0,1W
3302	4822 111 91516	1k 5% 0,1W
3303	4822 111 91516	1k 5% 0,1W
3304	4822 116 90336	100E 5%
3305	4822 116 90336	100E 5%
3306	4822 116 90336	100E 5%
3307	4822 116 81017	33k 5% 0,1W
3308	4822 111 91526	3k3 5% 0,1W
3309	4822 116 90457	10E 5% 0,1W
3320	4822 111 91517	10k 5%
3321	4822 111 91498	15k 5%
3322	4822 116 80881	220k 5%
3323	4822 116 90445	39k 5%
3324	4822 111 91449	2k7 5%
3325	4822 116 80881	220k 5%
3326	4822 116 80881	220k 5%
3327	4822 111 91517	10k 5%
3601	4822 116 90343	3k 5%
3602	4822 111 91507	82k 5%
3603	4822 116 90344	300k 5%
3607	4822 111 91498	15k 5%
3608	4822 111 91498	15k 5%
3609	4822 111 91517	10k 5%
3610	4822 051 20122	1k2 5%
3611	4822 116 90341	22E 5%
3612	4822 111 91523	22k 5%
3613	4822 111 91523	22k 5%
3614	4822 111 91511	2M2 10%
3615	4822 111 91511	2M2 10%
3616	4822 111 91506	75E 5%
3617	4822 111 91498	15k 5%
3618	4822 116 90445	39k 5%
3619	4822 116 90348	820k 5%
3620	4822 116 90336	100E 5%
3621	4822 111 91522	2k2 5%
3622	4822 116 90338	1k5 5%
3623	4822 111 91532	4k7 5%
3624	4822 116 90348	820k 5% 0,1W
3625	4822 116 90336	100E 5%
3626	4822 111 91522	2k2 5%
3627	4822 116 90338	1k5 5%
3628	4822 111 91532	4k7 5%
3634	4822 111 91536	0E JUMPER
3910	4822 111 91522	2k2 5% 0,1W

3911	4822 111 91522	2k2 5% 0,1W
3912	4822 111 91522	2k2 5% 0,1W
3913	4822 111 91522	2k2 5% 0,1W
3914	4822 111 91661	47k 5% 0,1W
3915	4822 111 91517	10k 5% 0,1W
3916	4822 111 91517	10k 5% 0,1W
3917	4822 111 91518	100k 5% 0,1W

5105	4822 156 11081	Quad.det.
5110	4822 157 50975	Choke 1mH
5111	4822 152 20678	Choke 33µH
5120	4822 152 20677	10µH
5121	4822 152 20677	10µH
5122	4822 152 20678	33µH
5123	4822 152 20679	68µH
5124	4822 157 50975	1mH
5125	4822 152 20683	AM Transf.
5126	4822 152 20682	Osc.AM
5127	4822 152 20678	Choke 33µH
5128	4822 157 53575	3.3µH
5130	4822 152 20681	Choke 160µH
5140	4822 157 50975	Choke 1mH
5145	4822 157 50975	Choke 1mH
5350	4822 157 53575	Choke 3.3µH
5351	4822 156 11128	RF-FM
5352	4822 156 11128	RF-FM
5353	4822 156 11129	RF-FM
5354	4822 157 53575	Choke 3.3µH
5601	4822 156 21438	Low pass
5602	4822 156 21438	Low pass

4822 130 31983	BAT85
5322 130 34955	BA482
5322 130 80119	BBY40
5322 130 31504	BZX79-C3V3
4822 130 34223	BZX79-C5V1
4822 130 80446	LL4148
4822 130 81196	S5566B
4822 130 30621	1N4148
4822 130 30841	1N4150
4822 130 80751	1S1885A

4822 130 42615	BC817-40
4822 130 42705	BC847
4822 130 60511	BC847B
4822 130 61233	BC857
5322 130 41983	BC858B
4822 130 40995	BD438

6105	4822 209 73507	TEA6100N2 MUSTI-Q
6109	4822 209 61954	TSA6057/C5 SYMO-N
6111	4822 209 72247	TEA6200/V1 AM-RF/IF
6112	4822 209 72892	TEA6310T/V2 SOFAC
6113	4822 209 72894	TDA1516Q/N5 AF-AMP.
6114	4822 209 72894	TDA1516Q/N5 AF-AMP.
6119	4822 209 72227	L4916 STAB.
6122	4822 209 72227	L4916 STAB.
6128	4822 209 72252	L4904 STAB.
6140	4822 209 71871	TA7784P PRE-AMP.
6150	4822 209 73568	TMP42C70M-RC4 µC
6160	4822 209 83159	LA2000 MSS-SENSOR
6166	4822 209 61366	TMP47C800N-RC7 µC
6169	4822 209 72042	MC78L05ACP STAB.
6170	4822 900 10022	X2402 EEPROM SPEC.
6303	4822 209 61406	TEA6101/N1 ANT-DIV.
6801	4822 209 72893	PCF8566T LCD DRIVER

MISCELLANEOUS

1150	4822 210 10305	FM unit
1153	4822 130 90587	Display
1155	4822 214 51676	ThiFi IAC
1156	4822 214 51674	ThiFi VF
1159	4822 242 72076	Crystal 10.7MHz
1160	4822 242 72076	Crystal 10.7MHz
1161	4822 242 71874	Cer. resonator 4MHz
1162	4822 242 70831	Cer. resonator 4MHz
1163	5322 242 70877	Cer. resonator 2MHz
1164	4822 242 71883	Cer. resonator 10.7MHz
1165	4822 242 71883	Cer. resonator 10.7MHz
1166	4822 071 27502	Fuse 7.5A
1170	4822 242 72862	Cer. resonator 10.7MHz
1601	4822 214 51677	ThiFi stereo decoder
1602	4822 214 51698	ThiFi DOLBY
1850	4822 134 40876	Lamp 16V-38mA
1851	4822 134 40855	Lamp 14V-40mA
1852	4822 134 40855	Lamp 14V-40mA
1853	4822 134 40876	Lamp 16V-38mA
1854	4822 134 40876	Lamp 16V-38mA
1857	4822 134 40876	Lamp 16V-38mA
1858	4822 134 40855	Lamp 14V-40mA
1859	4822 134 40855	Lamp 14V-40mA

SURVEY OF SYMBOLS

Carbon film 0.2 W	70°C	5%	
Carbon film 0.33 W	70°C	5%	
Metal film 0.33 W	70°C	5%	
Carbon film 0.5 W	70°C	5%	
Carbon film 0.67 W	70°C	5%	
Carbon film 1.15 W	70°C	5%	

Ⓒ Chip component

Ceramic plate Tuning ⩽ 120 pF NP.0	2%	
Others	—20/+80%	
Polyester flat foil	10%	
Metalized polyester flat film	10%	
Polyester flat foil small size (Mylar)	10%	
Polysterene film/foil	1%	
Tubular ceramic		
Miniature single		
Subminiature tantalum	± 20%	

*a = 2,5 V
b = 4 V
c = 6,3 V
d = 10 V
e = 16 V
f = 25 V
g = 40 V
h = 63 V
j = 100 V
l = 125 V
m = 150 V
n = 160 V
q = 200 V
r = 250 V
s = 300 V
t = 350 V
u = 400 V
v = 500 V
w = 630 V
x = 1000 V
A = 1,6 V
B = 6 V
C = 12 V
D = 15 V
E = 20 V
F = 35 V
G = 50 V
H = 75 V
I = 80 V

27 037A/C