Cassette auto radio 22AC 820

00/38/62/78

Service
Service
Service

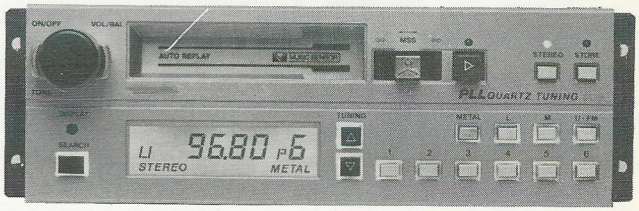

30 550A12

Service Manual

12 V

CONTENTS

		Page
Photograph with controls		2
Specification		2
Rear view		2
Servicing hints		3
Main pcb, conductor side		4
Adjustment instructions		5
Circuit diagram, apparatus		6
Circuit diagram	FM unit	7
Adjustment instructions	FM unit	8
PC-board	FM unit	9
Circuit diagram	AM unit	10
Adjustment instructions	AM unit	11
PC-board	AM unit	11
Circuit diagram	AF unit	12
PC-board	AF unit	13
Circuit diagram	Front unit	14
PC-board	Front unit	14
Wiring diagram		15
Exploded view		15
List of mechanical parts		15
List of electrical parts		16-19
Survey of standard symbols		19

Documentation Technique Service Dokumentation Documentazione di Servizio Huolte-Ohje Manual de Servicio Manual de Serviçio

PHILIPS

Subject to modification

GB 4822 725 15048

Printed in The Netherlands

PHILIPS

CS 84 417GB

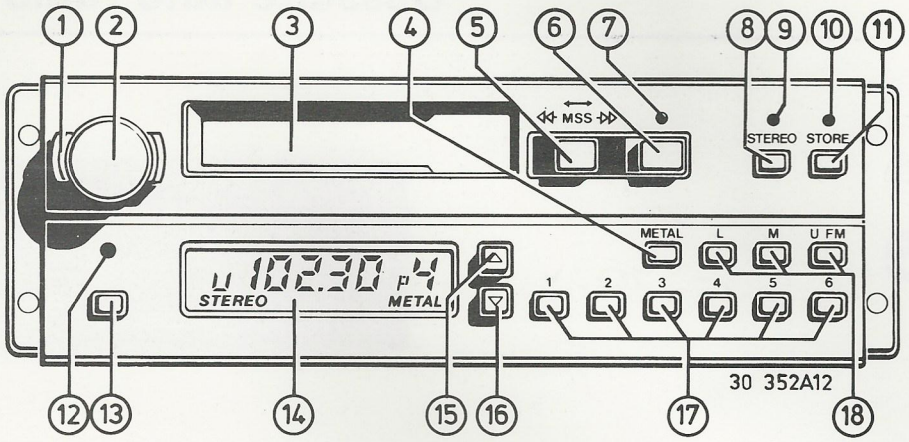

1	Tone control	R1352/1353	10	Store switch	SK-STORE
2	On/off switch	SK-ON	11	Store indicator	D-6651
	Volume control Balance control (pull-out)	R1354,1355 R1351	12	Adjustment display angle	R3683
3	Cassette aperture	D4-5	13	Search switch	SK-SEARCH
4	Tape selector	SK-MTL	14	Display	LCD1651
5	MSS switch Fast wind switch Stand by/eject switch	D4-5	15	Tuning (frequency up)	SK-UP
6	Playback switch		16	Tuning (frequency down)	SK-DOWN
7	Playback/fastwind switch		17	Preset switches	SK-P1...P6
8	Stereo/mono switch	SK-STEREO	18	Wave range switches U/FM, M = MW, L = LW	SK-FM/-MW/-LW
9	FM-stereo indicator	D6650			

SPECIFICATION

Wave ranges:

LW : 154 - 260 kHz (1950 - 1154 m)
MW : 513 - 1605 kHz (585 - 187 m)
FM : 87,5 - 104 MHz
IF-AM : 468 kHz
IF-FM : 10,7 MHz

Output power:

2 x 5,3 W ± 1 dB D= 10% (at 2 x 4 Ω)
2 x 9 W ± 1 dB D= 10% (at 4 x 4 Ω)
Dimensions: 180 x 153 x 51 mm

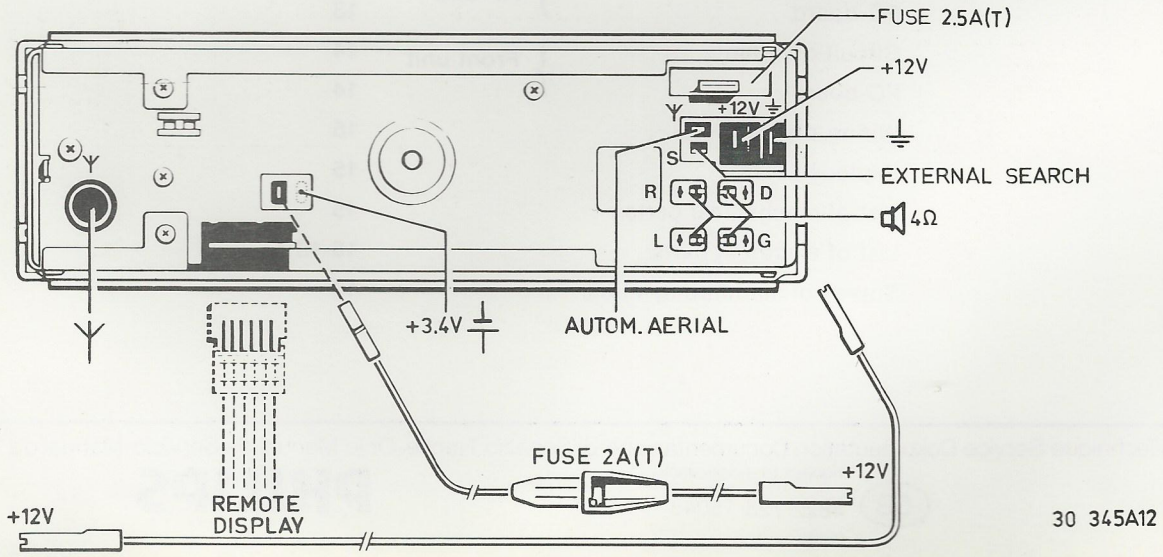

SERVICING HINTS

1. Power supply

Power supply of the radio section is realized via the tape-deck.
If, during measurements and adjustments the tape-deck is disconnected from the supply, interconnect point A575 and point A572 (+14,2 V).

2. IC6504,6509

Because, in general, MOS ICs are very sensitive to overload and too high voltage, measurements should be carried out with the greatest possible care.
For further instructions, see the directions enclosed in the separate IC- shipment packages.

3. Check of IC6504 (Micro Controller COP334L)

. Check supply voltages at pins 2 and 11 (5.0 V).
. Check clock frequency at pin 3 (abt. 100 kHz).
. Service test programme.
a. Switch off apparatus.
b. Depress key P5 and at the same time switch on apparatus.
Thus, the Service Test Programme is called and the following measurements can be carried out.
Dependent on the situation at an input, the same result should be found at the corresponding outputs.

Input	To be measured	Result
9="0"	7,14,22,27	"0"
9="1"		"1"
10="0"	6,13,23,26	"0"
10="1"		"1"
19="0"	8,15,21,28	"0"
19="1"		"1"
20="0"	5,12,24,25	"0"
20="1"		"1"

HOUSING (A ... D)

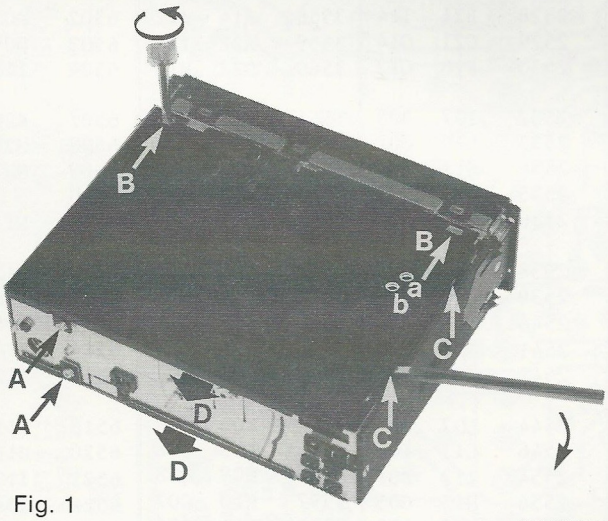

Fig. 1

29792A19

FRONTPLATE (A, B) FRONTUNIT (C, D)

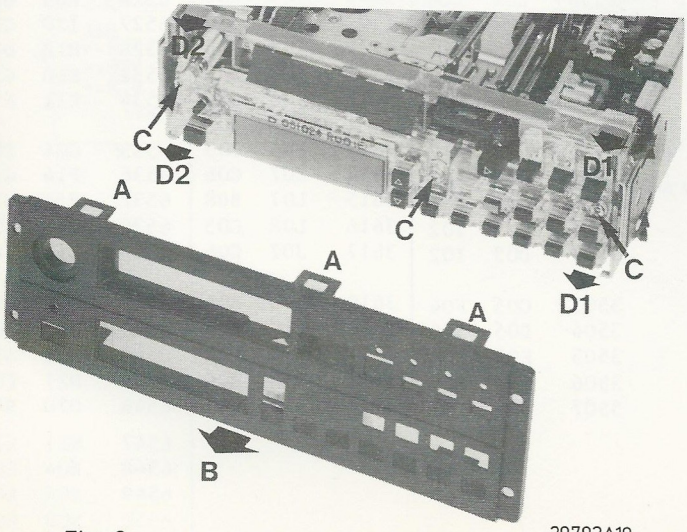

Fig. 2

29793A19

LEDS (A) FRONTPANEL, PUSHBUTTONS (B, C)

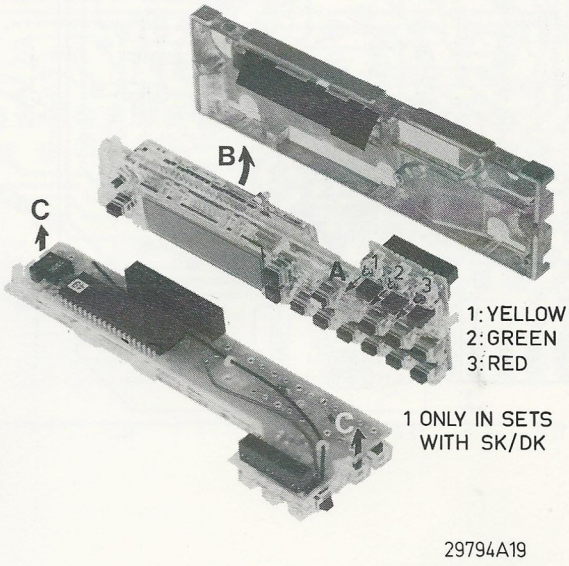

29794A19

Fig. 3

PUSH BUTTON LAY-OUT

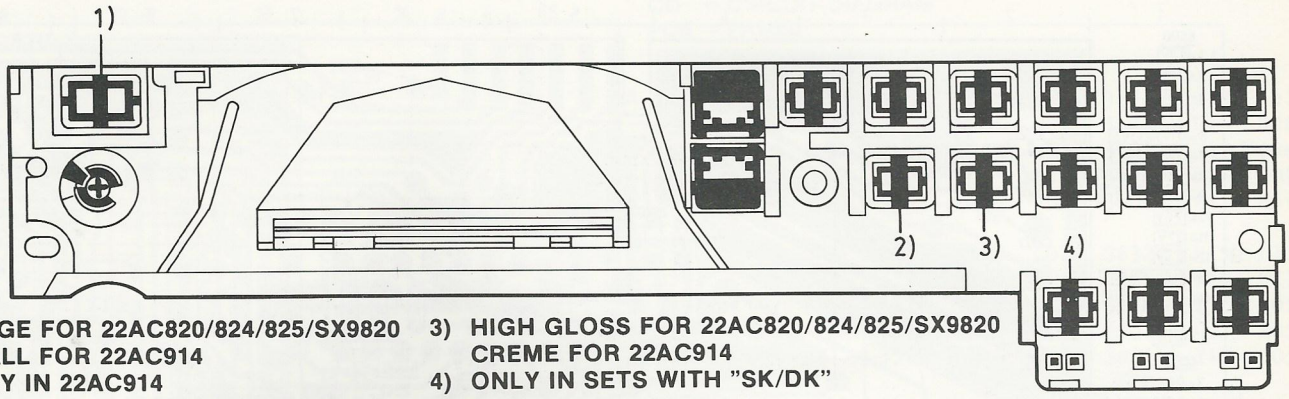

1) LARGE FOR 22AC820/824/825/SX9820
SMALL FOR 22AC914
2) ONLY IN 22AC914
3) HIGH GLOSS FOR 22AC820/824/825/SX9820
CREME FOR 22AC914
4) ONLY IN SETS WITH "SK/DK"

30070B 22

Fig. 4

LS PLUGS

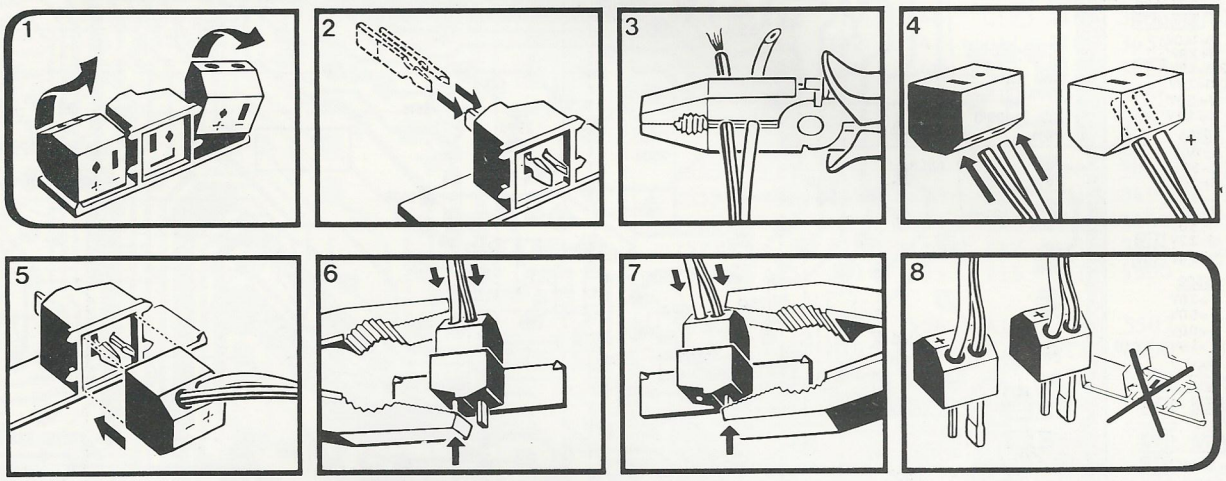

Fig. 5

30 341A12

MOUNTING THE SET (A, B, C)

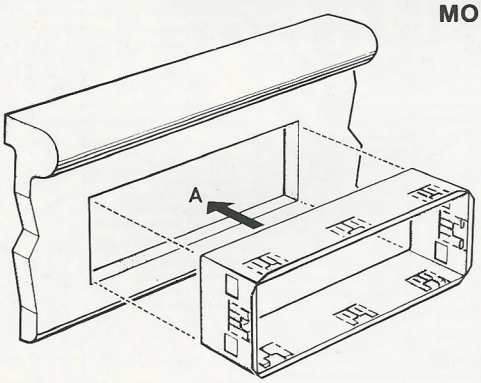

Fig. 6a

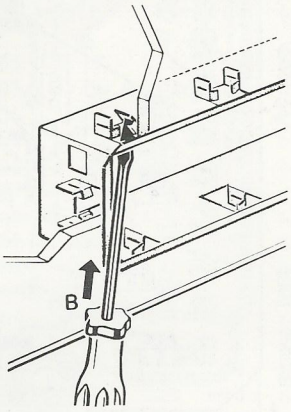

Fig. 6b

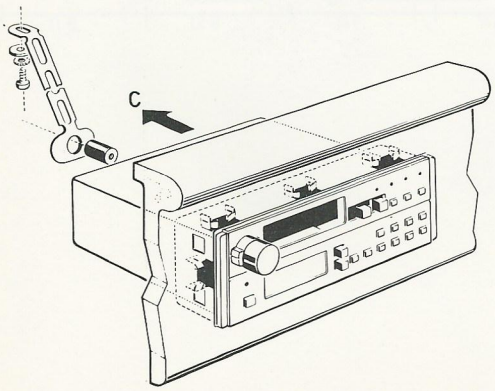

Fig. 6c

UNLOCKING (A, B)

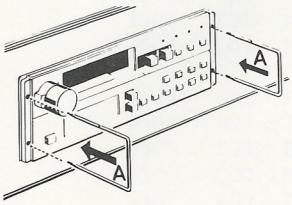

Fig. 7a

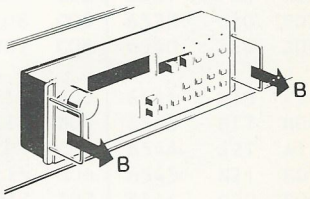

Fig. 7b

30 342B12

ADJUSTMENTS

a. Measuring equipment

- RF signal generator with AM/FM modulation and calibrated attenuator (e.g. Radiometer RE101).
- RF stereo generator (e.g. Sound Technology 1000 A).
- Frequency counter (e.g. PM6414).
- DC voltmeter (e.g. PM2430).
- AC voltmeter (e.g. PM2454).

b. Adjustments

b.1 Stereo decoder

- Connect frequency counter to ◇4◇.
- Adjust 3557 for 76 ± 0,3 kHz.

b.2 FM section: see page p.8

b.3 SDS (Smooth mono/stereo take-over)

- Connect AC voltmeters to ◇8◇ and ◇9◇ (LS-R and LS-L).
- Apply a 96 MHz-80 mV RF-stereo signal to ◇A◇.
- Tune set into above signal.
- Adjust balance control for equal meter readings.
- Adjust volume control for a 0 dB reading of the meters.
- Eliminate the R-signal from the stereo signal.
- Adjust 3070 (FM panel) for a 10 ± 2 dB difference between the meters.
- Check this 10 dB cross-talk by eliminating the L-signal instead of the R-signal.
- In case of differing values, adjust for the average.

b.4 Level detector

- Apply a 93 MHz-150 μV RF-signal to ◇A◇.
- Connect DC voltmeter to pin 26 IC6504.
- Adjust 3120 (FM panel) for switching point (high).

b.5 AM-section: see page 11

b.6 AM station search

- Apply a 648 kHz-500 μV RF-signal, modulated at 1 kHz, to ◇C◇.
- Tune to an arbitrary MW frequency.
- Depress "Search" key.
- Station search must stop at 648 kHz.
- If necessary, adjust 3506 until the above condition is met.

ADJUSTMENTS

a. Measuring equipment

- RF signal generator with AM and FM modulation, RF sweep and calibrated attenuator (e.g. Radiometer RE101).
- RF stereo generator (e.g. Sound Technology 1000A).
- VRF coder (e.g. Luther & Maelzer 157Z).
- Oscilloscope (e.g. PM3212).
- Frequency counter (e.g. PM6414).
- DC voltmeter (e.g. PM2430).
- AC voltmeter (e.g. PM2454).

b. Adjustments

- Open bridge A.
- Set 2052, 2058 to 1/3 of their capacitance and 3065, 3070 to mid-position (only for RF and IF adjustments).

b1. Adjustment of oscillator

- Connect DC voltmeter to 5.
- Tune set into 100.0 MHz.
- Adjust 5054 for 4,65 V.

b2. Adjustment of IF circuits

- Short-circuit pins 1 and 3 of 5061.
- Connect oscilloscope to 6.
- Inject RF signal (93 MHz-10 μV, Δf =2,5 kHz (50 Hz), FM modulated 1 kHz) to A.
- Tune set into above signal.
- Adjust 5060, 5057 for max. height.
- Remove short 1-3 of 5061.

b3. Adjustment of S-curve

- Oscilloscope, RF-signal and adjustment as sub b2.
- Adjust 5061 for optimally linear S-curve.
- Adjust 3077 for max. symmetrical S-curve.

b4. Adjustment of RF circuits

- Connect oscilloscope as indicated sub b2.
- Apply a 88 MHz RF signal, FM-1 kHz to A.
- Tune set.
- Adjust 5051 and 5052 for max. height.
- 100 MHz RF signal, FM-1 kHz.
- Tune set.
- Adjust 2052 and 2058 for max. height.
- Repeat several times, ending with 5051 and 5052.

b5. Adjustment of S-curve

- Close bridge A.
- Short-circuit C2094.
- Connect DC voltmeter between 7 and "+" 2094.
- Short dummy aerial A to ground.
- Adjust 5061 for 0 ± 5 mV.

b6. Adjustment of AM rejection

- DC voltmeter as indicated sub b5, oscilloscope as sub b2.
- Inject 93 MHz RF signal, unmodulated to A.
- Tune set to zero-crossing of S-curve, the meter reading being 0 ± 5 mV.
- AM modulate signal (1 kHz-30%).
- Adjust 3077 for minimum.
- Switch off modulation. Meter must read 0 ± 30 mV, otherwise check alignment of S-curve (see b5). If necessary re-adjust and repeat adjustment of 3077.

b7. Adjustment of IF sensitivity

- Connect AC voltmeter to 8 (LS-R).
- Inject RF signal as sub b2, but modulated at 400 Hz, to A and adjust volume control for 0 dB.
- Inject 15 μV signal. Adjust 3065 for —3 dB.

2050	Chip 150 pF 5% 50 V	4822 122 31767
2051	Chip 4.7 nF 20% 50 V	4822 122 31789
2052	10 pF	4822 125 50199
2053	Chip 10 nF 20% 50 V	4822 122 31786
2054	Chip 4.7 nF 20% 50 V	4822 122 31789
2055	Chip 4.7 nF 20% 50 V	4822 122 31789
2056	Chip 18 pF 5% 50 V	4822 122 31769
2058	10 pF	4822 125 50199
2059	Chip 470 pF 10% 50 V	4822 122 31778
2060	Chip 470 pF 10% 50 V	4822 122 31778
2061	10 pF 2% 100 V	5322 122 34143
2062	Chip 10 nF 20% 50 V	4822 122 31786
2063	Chip 22 nF 20% 50 V	4822 122 31788
2065	Chip 180 pF 2% 50 V	4822 122 31794
2066	Chip 180 pF 2% 50 V	4822 122 31794
2067	Chip 15 nF 20% 50 V	4822 122 31787
2068	Chip 15 nF 20% 50 V	4822 122 31787
2069	Chip 15 nF 20% 50 V	4822 122 31787
2070	Chip 10 nF 20% 50 V	4822 122 31786
2071	Chip 22 nF 20% 50 V	4822 122 31788
2072	Chip 22 nF 20% 50 V	4822 122 31788
2073	330 nF 10% 250 V	5322 121 44347
2074	1 μF 50 V	4822 124 20927
2077	Chip 22 nF 20% 50 V	4822 122 31788
2078	Chip 22 nF 20% 50 V	4822 122 31788
2080	Chip 22 nF 20% 50 V	4822 122 31788
2086	Chip 47 pF 5% 50 V	4822 122 31772
2089	Chip 180 pF 5% 50 V	4822 122 31768
2090	Chip 180 pF 5% 50 V	4822 122 31768
2095	Chip 390 pF 5% 50 V	4822 122 31771
2103	Chip 15 nF 20% 50 V	4822 122 31787
2104	Chip 10 nF 20% 50 V	4822 122 31786
2105	Chip 39 pF 10% 50 V	4822 122 31777
2106	Chip 1.5 pF 50 V	4822 122 31792
2119	Chip 15 nF 20% 50 V	4822 122 31787
2120	Chip 4.7 nF 20% 50 V	4822 122 31789
2121	Chip 15 nF 20% 50 V	4822 122 31787
2201	Chip 10 nF 20% 50 V	4822 122 31786
2202	Chip 22 nF 20% 50 V	4822 122 31788
2204	Chip 10 nF 20% 50 V	4822 122 31786
2205	4.7 μF 63 V	4822 124 40246
2206	10 μF 50 V	4822 124 40435
2207	Chip 10 nF 20% 50 V	4822 122 31786
2210	Chip 10 nF 20% 50 V	4822 122 31786
2212	Chip 10 nF 20% 50 V	4822 122 31786
2213	Chip 470 pF 5% 63 V	4822 122 31727
2214	Chip 10 nF 20% 50 V	4822 122 31786
2218	Chip 10 nF 20% 50 V	4822 122 31786
2219	2.7 nF 1% 160 V	5322 121 54065
2226	20 pF	4822 125 50201
2229	Chip 390 pF 5% 50 V	4822 122 31771
2234	Chip 100 pF 5% 50 V	4822 122 31765
2235	40 pF	4822 125 50092
2238	Chip 390 pF 5% 50 V	4822 122 31771
2239	40 pF	4822 125 50092
2240	20 pF	4822 125 50201
2241	Chip 27 pF 10% 50 V	4822 122 31825
2242	Chip 18 pF 5% 50 V	4822 122 31769
2245	Chip 22 nF 20% 50 V	4822 122 31788
2247	Chip 22 nF 20% 50 V	4822 122 31788
2248	Chip 120 pF 5% 50 V	4822 122 31766
2249	Chip 120 pF 5% 50 V	4822 122 31766
2252	Chip 4700 pF 10% 50 V	4822 122 31784
2253	2.2 μF 50 V	4822 124 40459
2254	10 μF 16 V	4822 124 21108

2255	470 nF 63 V	4822 124 40239
2256	Chip 22 nF 20% 50 V	4822 122 31788
2258	100 μF 10 V	4822 124 40178
2352	4.7 μF 63 V	4822 124 40246
2353	4.7 μF 63 V	4822 124 40246
2354	10 nF 10% 63 V	4822 122 31728
2355	10 nF 10% 63 V	4822 122 31728
2360	1 μF 63 V	4822 124 40242
2361	1 μF 63 V	4822 124 40242
2362	Chip 330 pF 10% 63 V	4822 122 31642
2363	Chip 330 pF 10% 63 V	4822 122 31642
2368	Chip 2.2 nF 10% 63 V	4822 122 31644
2369	Chip 2.2 nF 10% 63 V	4822 122 31644
2376	150 μF 10 V	4822 124 40179
2377	150 μF 10 V	4822 124 40179
2380	2200 μF 16 V	4822 124 40332
2381	2200 μF 16 V	4822 124 40332
2386	1000 μF 16 V	4822 124 40335
2501	Chip 180 pF 5% 50 V	4822 122 31768
2503	Chip 1.5 nF 10% 50 V	4822 122 31781
2506	Chip 2.7 nF 10% 50 V	4822 122 31783
2507	Chip 15 nF 10% 50 V	4822 122 31782
2509	100 nF 63 V	4822 121 41547
2510	100 nF 63 V	4822 121 41547
2513	4.7 μF 35 V	4822 124 40349
2515	27 nF 5% 250 V	4822 121 41604
2519	Chip 560 pF 5% 50 V	4822 122 31773
2520	Chip 22 nF 10% 63 V	4822 122 31797
2521	10 μF 10% 20 V	5322 122 10174
2526	Chip 12 nF 10% 50 V	5322 122 31648
2527	Chip 12 nF 10% 50 V	5322 122 31648
2528	Chip 4.7 nF 10% 50 V	4822 122 31784
2529	Chip 4.7 nF 10% 50 V	4822 122 31784
2530	4.7 μF 63 V	4822 124 40246
2532	Chip 10 nF 10% 63 V	4822 122 31728
2534	Chip 10 nF 10% 63 V	4822 122 31728
2535	Chip 2.2 nF 10% 63 V	4822 122 31644
2536	Chip 22 nF 10% 63 V	4822 122 31797
2539	Chip 22 nF 10% 63 V	4822 122 31797
2540	Chip 22 nF 10% 63 V	4822 122 31797
2541	Chip 15 nF 10% 50 V	4822 122 31782
2546	47 nF 20% 50 V	4822 122 31791
2554	33 pF 2% 100 V	4822 122 31067
2556	Chip 56 pF 10% 50 V	4822 122 31779
2557	160 pF 1% 630 V	4822 121 50561
2558	68 pF 2% NPO	4822 122 31349
2568	100 nF 63 V	4822 121 41547
2571	4.7 μF 63 V	4822 124 40246
2660	Chip 680 pF 5% 50 V	4822 122 31775
2661	Chip 22 nF 20% 50 V	4822 122 31788
2662	Chip 22 nF 20% 50 V	4822 122 31788

1351-55	Potm. volume, tone, balance 2x47K+2x100K+100K	4822 102 40064
3050	Chip 39K 5% 0.125 W	5322 111 90108
3051	Chip 27K 10% 0.125 W	4822 111 90121
3052	Chip 1K 5% 0.125 W	5322 111 90092
3053	Chip 510E 10% 0.125 W	4822 111 90245
3054	Chip 27K 10% 0.125 W	4822 111 90121
3055	Chip 39K 5% 0.125 W	5322 111 90108
3056	Chip 27K 10% 0.125 W	4822 111 90121
3057	Chip 27K 10% 0.125 W	4822 111 90121
3058	Chip 150E 5% 0.125 W	4822 111 90098
3059	Chip jumper 0E	4822 111 90163
3060	Chip 300E 10% 0.125 W	4822 111 90187
3061	Chip 39K 5% 0.125 W	5322 111 90108
3062	Chip 1.2K 5% 0.125 W	5322 111 90096
3063	Chip 1.2K 5% 0.125 W	5322 111 90096
3064	Chip 6.8K 5% 0.125 W	5322 111 90117
3065	Potm 4.7K 0.1 W	4822 100 10495
3066	Chip 330E 5% 0.125 W	5322 111 90106
3067	Chip 2.2K 5% 0.125 W	5322 111 90102
3068	Chip 680E 5% 0.125 W	4822 111 90162
3069	5.6K 5% 0.125 W	5322 111 90114
3070	Potm 4.7K 0.1 W	4822 100 10495
3071	Chip 10E 5% 0.125 W	5322 111 90095
3072	NTC	4822 116 30226
3073	Chip 390E 10% 0.125 W	4822 111 90122
3074	Chip 2.2K 5% 0.125 W	5322 111 90102
3075	Chip jumper 0E	4822 111 90163
3076	Chip 100K 10% 0.125 W	4822 111 90183
3077	Potm. 1K 0.1 W	4822 100 10493
3078	Chip 470E 5% 0.125 W	5322 111 90109
3079	Chip 5.6K 5% 0.125 W	5322 111 90114
3080	Chip 5.6K 5% 0.125 W	5322 111 90114
3084	Chip 22K 5% 0.125 W	5322 111 90103
3085	Chip 2.2K 5% 0.125 W	5322 111 90102
3086	Chip 2.2K 5% 0.125 W	5322 111 90102
3087	Chip 15K 5% 0.125 W	4822 111 90196
3089	Chip jumper 0E	4822 111 90163
3090	Chip 39K 5% 0.125 W	5322 111 90108
3096	Chip 560K 5% 0.125 W	4822 111 90169
3097	Chip 3.3K 5% 0.125 W	4822 111 90157
3098	Chip 2.2K 5% 0.125 W	5322 111 90102
3099	Chip 1K 5% 0.125 W	5322 111 90092
3120	Potm. 4.7K 0.1 W	4822 100 10495
3122	Chip 100K 5% 0.125 W	4822 111 90148
3123	Chip 3.3M 10% 0.125 W	4822 111 90191
3126	Chip 39K 5% 0.125 W	5322 111 90108
3127	Chip 6.8K 5% 0.125 W	5322 111 90117
3200	Chip 6.8K 5% 0.125 W	5322 111 90117
3201	Chip 56E 10% 0.125 W	4822 111 90194
3202	Chip 1M 5% 0.125 W	5322 111 90094
3203	Chip 150E 5% 0.125 W	5322 111 90098
3206	Chip 220K 5% 0.125 W	4822 111 90197
3207	Chip 39K 5% 0.125 W	5322 111 90108
3208	Chip jumper 0E	4822 111 90163
3210	Chip 2.2K 5% 0.125 W	5322 111 90102
3211	Chip 3.9K 10% 0.125 W	4822 111 90192
3212	Chip 100K 10% 0.125 W	4822 111 90183
3213	Chip 39K 5% 0.125 W	5322 111 90108
3215	Chip 220E 5% 0.125 W	4822 111 90178
3216	Chip 390E 5% 0.125 W	5322 111 90138
3223	Chip 22K 5% 0.125 W	5322 111 90103
3224	Chip 1.8K 5% 0.125 W	5322 111 90101
3225	Chip 56K 5% 0.125 W	5322 111 90115
3227	Chip 560K 10% 0.125 W	4822 111 90193
3228	Chip 220E 5% 0.125 W	4822 111 90178

3229	Chip 100K 10% 0.125 W	4822 111 90183
3231	Chip 22E 10% 0.125 W	4822 111 90186
3232	Chip jumper 0E	4822 111 90163
3233	Chip 2.2M 10% 0.125 W	4822 111 90185
3234	Chip 1.8K 5% 0.125 W	5322 111 90101
3235	Chip 680E 10% 0.125 W	4822 111 90195
3236	Chip 1M 5% 0.125 W	5322 111 90094
3237	Chip 56K 5% 0.125 W	5322 111 90115
3238	Chip 1K 5% 0.125 W	5322 111 90092
3239	Chip 5.6K 5% 0.125 W	5322 111 90114
3240	Chip 8.2K 5% 0.125 W	5322 111 90118
3241	Chip jumper 0E	4822 111 90163
3242	Chip jumper 0E	4822 111 90163
3243	Chip 100E 5% 0.125 W	5322 111 90091
3244	Chip 2.2K 5% 0.125 W	5322 111 90102
3245	Chip 3.3K 10% 0.125 W	4822 111 90188
3246	Chip 33K 10% 0.125 W	4822 111 90189
3247	Chip jumper 0E	4822 111 90163
3248	Chip jumper 0E	4822 111 90163
3249	Chip 100E 5% 0.125 W	5322 111 90091
3355	Chip jumper 0E	4822 111 90163
3358	Chip 4.7K 5% 0.125 W	5322 111 90111
3359	Chip 4.7K 5% 0.125 W	5322 111 90111
3360	Chip 4.7K 5% 0.125 W	5322 111 90111
3361	Chip 4.7K 5% 0.125 W	5322 111 90111
3365	Chip jumper 0E	4822 111 90163
3366	Chip jumper 0E	4822 111 90163
3367	Chip jumper 0E	4822 111 90163
3368	Chip jumper 0E	4822 111 90163
3371	Chip jumper 0E	4822 111 90163
3372	Chip 1E 10% 0.125 W	4822 111 90184
3373	Chip 1E 10% 0.125 W	4822 111 90184
3377	Chip 150K 5% 0.125 W	5322 111 90099
3380	Chip 56K 5% 0.125 W	5322 111 90115
3381	Chip 56K 5% 0.125 W	5322 111 90115
3382	Chip 2.2K 5% 0.125 W	5322 111 90102
3383	Chip 2.2K 5% 0.125 W	5322 111 90102
3500	Chip 6.8K 5% 0.125 W	4822 111 90202
3501	Chip 39K 5% 0.125 W	5322 111 90108
3502	Chip 56K 5% 0.125 W	5322 111 90115
3503	Chip 2.2K 5% 0.125 W	5322 111 90102
3504	Chip 3.3K 5% 0.125 W	4822 111 90157
3506	Potm. carb. lin. 2.2K	4822 105 10404
3507	Chip 2.7K 5% 0.125 W	4822 111 90179
3508	Chip 6.8K 5% 0.125 W	5322 111 90117
3510	Chip 220E 5% 0.125 W	4822 111 90178
3522	Chip 2.7K 5% 0.125 W	4822 111 90179
3525	Chip 1K 5% 0.125 W	5322 111 90092
3527	Chip 150K 5% 0.125 W	5322 111 90099
3528	Chip 8.2K 5% 0.125 W	5322 111 90118
3529	Chip 47K 5% 0.125 W	5322 111 90112
3530	Chip 150K 5% 0.125 W	5322 111 90099
3531	Chip 1M 5% 0.125 W	5322 111 90094
3532	Chip 1M 5% 0.125 W	5322 111 90094
3533	Chip 22K 5% 0.125 W	5322 111 90103
3536	Chip 27K 5% 0.125 W	4822 111 90155
3538	Chip 390K 5% 0.125 W	4822 111 90182
3540	Chip 620K 5% 0.125 W	4822 111 90201
3541	Chip 47K 5% 0.125 W	5322 111 90112
3546	Chip jumper 0E	4822 111 90163
3547	Chip 4.7K 5% 0.125 W	5322 111 90111
3548	Chip 3K 5% 0.125 W	4822 111 90198
3549	Chip 10K 5% 0.125 W	5322 111 90093
3550	Chip 8.2K 5% 0.125 W	5322 111 90118
3551	Chip 820E 5% 0.125 W	4822 111 90171

3552	Chip 1.8K 5% 0.125 W	5322 111 90101
3553	Chip 1K 5% 0.125 W	5322 111 90092
3554	Chip 15K 5% 0.125 W	4822 111 90196
3557	Potm. 10K carb. lin. 0.1 W	4822 100 10035
3558	Chip 1K 5% 0.125 W	5322 111 90092
3559	Chip 10K 5% 0.125 W	5322 111 90093
3560	Chip 10K 5% 0.125 W	5322 111 90093
3561	Chip 470E 5% 0.125 W	4822 111 90217
3562	Chip 5.6K 5% 0.125 W	5322 111 90114
3563	Chip 5.6K 5% 0.125 W	5322 111 90114
3565	Chip 47K 5% 0.125 W	5322 111 90112
3568	Chip 8.2K 5% 0.125 W	5322 111 90118
3569	Chip 8.2K 5% 0.125 W	5322 111 90118
3578	Chip 47K 5% 0.125 W	5322 111 90112
3583	Chip jumper 0E	4822 111 90163
3585	Chip 470E 5% 0.125 W	5322 111 90109
3597	Chip 390E 5% 0.125 W	5322 111 90138
3598	Chip jumper 0E	4822 111 90163
3603	Chip 100K 5% 0.125 W	4822 111 90148
3604	Chip 15K 5% 0.125 W	4822 111 90196
3605	Chip 12K 5% 0.125 W	5322 111 90097
3611	Chip 1M 5% 0.125 W	5322 111 90094
3612	Chip 2.2K 5% 0.125 W	5322 111 90102
3613	Chip 22K 5% 0.125 W	5322 111 90103
3614	Chip 7.5K 5% 0.125 W	4822 111 90204
3616	Chip jumper 0E	4822 111 90163
3617	Chip 30K 5% 0.125 W	4822 111 90199
3619	Chip 27K 5% 0.125 W	4822 111 90155
3620	Chip 27K 5% 0.125 W	4822 111 90155
3621	Chip 27K 5% 0.125 W	4822 111 90155
3623	Chip 680E 5% 0.125 W	4822 111 90162
3624	Chip 27K 5% 0.125 W	4822 111 90155
3625	Chip 27K 5% 0.125 W	4822 111 90155
3627	Chip jumper 0E	4822 111 90163
3628	Chip 47K 5% 0.125 W	5322 111 90112
3632	Chip 47K 5% 0.125 W	5322 111 90112
3634	Chip 470E 5% 0.125 W	4822 111 90217
3636	Chip 15K 5% 0.125 W	4822 111 90196
3637	Chip 6.8K 5% 0.125 W	5322 111 90117
3647	Chip 680E 5% 0.125 W	4822 111 90162
3651	Chip jumper 0E	4822 111 90163
3652	Chip jumper 0E	4822 111 90163
3653	Chip jumper 0E	4822 111 90163
3654	Chip jumper 0E	4822 111 90163
3655	Chip 100E 5% 0.125 W	5322 111 90091
3656	Chip 470E 5% 0.125 W	5322 111 90109
3659	Chip 68E 5% 0.125 W	4822 111 90203
3661	Chip 1.2K 5% 0.125 W	5322 111 90096
3670	Chip jumper 0E	4822 111 90163
3671	Chip 560E 5% 0.125 W	5322 111 90113
3672	Chip 560E 5% 0.125 W	5322 111 90113
3673	Chip 560E 5% 0.125 W	5322 111 90113
3674	Chip 100K 5% 0.125 W	4822 111 90148
3675	Chip 100K 5% 0.125 W	4822 111 90148
3676	Chip 100K 5% 0.125 W	4822 111 90148
3677	Chip jumper 0E	4822 111 90163
3678	Chip jumper 0E	4822 111 90163
3679	Chip jumper 0E	4822 111 90163
3680	Chip 1M 5% 0.125 W	5322 111 90094
3681	Chip 15K 5% 0.125 W	4822 111 90196
3682	Chip 820K 5% 0.125 W	4822 111 90205
3683	220K 0.1 W	4822 100 10496
3684	Chip 150K 5% 0.125 W	5322 111 90099
3685	Chip jumper 0E	4822 111 90163
3686	Chip jumper 0E	4822 111 90163

3687	Chip jumper 0E	4822 111 90163
3688	Chip jumper 0E	4822 111 90163
3689	Chip jumper 0E	4822 111 90163
3690	Chip jumper 0E	4822 111 90163
3691	Chip jumper 0E	4822 111 90163
3692	Chip jumper 0E	4822 111 90163
3693	Chip jumper 0E	4822 111 90163
3694	Chip jumper 0E	4822 111 90163
3695	Chip jumper 0E	4822 111 90163

5050	4822 153 10296
5051	4822 156 10664
5052	4822 156 10666
5053	4822 157 51504
5054	4822 157 50896
5057	4822 156 10665
5060	4822 153 50108
5061	4822 153 50102
5200	4822 157 51391
5201	4822 157 50963
5202	4822 157 51509
5203	4822 157 51216
5204	4822 157 51508
5205	4822 157 51508
5206	4822 157 51507
5207	4822 157 51505
5208	4822 157 51508
5210	4822 157 51506
5213	4822 156 10663
5350	4822 156 21109
5500	4822 157 51503
5502	4822 157 50965

AA119	4822 130 31012
BAX14	4822 130 34193
BA317	4822 130 30847
BA479	4822 130 41909
BB204B	4822 130 34449
BB204G	4822 130 34825
BB212	4822 130 31129
BR100/03	4822 130 20039
BZX79-B4V7	4822 130 34174
BZX79-B5V1	4822 130 34233
BZX79-C6V2	4822 130 31111
BZX79-B9V1	4822 130 30862
V505P red	4822 130 31398
V507P green	4822 130 31845
1N4001G	4822 130 31438
2-AA119	4822 130 30312

BC548	4822 130 40938
BC548B	4822 130 40937
BC548C	4822 130 44196
BC549B	4822 130 40936
BC549C	4822 130 44246

BC558B	4822 130 44197
BD137	4822 130 40823
BF240	4822 130 40902
BF245A	5322 130 44499
BF410B	4822 130 41908
BF423 (SIE)	4822 130 41646
BF495C	4822 130 41499
BF410A	5322 130 44905
BF410D	4822 130 41697

COP344L Micro contr.	4822 209 10348
COP399L Memory	4822 209 10343
HEF4049B Buffer	5322 209 14049
TEA5560 IF-FM	4822 209 81018
MC3302N Quad. opamp.	4822 209 80634
PC2110P Duplex driver	4822 209 81336
SAA1057 Prescaler	4822 209 81002
SAA1300 Wave range	4822 209 81338
TDA1005A Stereo dec.	4822 209 80514
TDA1020 AF	4822 209 81172

TDA1062-S Mixer/osc.	4822 209 81337
TDA1072 IF amp/det.	4822 209 80754
TL78L86 Stabi	4822 209 81334
UA78M05UC Stabi	5322 209 81841

Miscellaneous

1050	Ceram filter FM 10.7 MHz	4822 242 70612
1051	Ceram filter FM 10.7 MHz	4822 242 70612
1200	Ceram filter AM 468 kHz	4822 242 70611
1357	Fuse 2.5AT	4822 253 30026
1500	Lamp 14 V 50 mA	4822 134 40504
1501	Lamp 14 V 50 mA	4822 134 40504
1502	Lamp 14 V 50 mA	4822 134 40504
1505	Crystal 4 MHz	4822 242 70325
1508	Thick film unit IAC	4822 111 90066
1651	Display	4822 130 90113

0.2 W (CR16)	≤ 220 kΩ	5%
	> 270 kΩ	10%
0.33 W (CR25)	≤ 1 MΩ	5%
	> 1 MΩ	10%
0.33 W (SFR25)		5%
0.25 W (VR25)	≤ 10 MΩ	5%
	> 10 MΩ	10%
0.5 W (CR37)	≤ 1 MΩ	5%
	> 1 MΩ	10%
0.67 W (CR52)		5%
1.15 W (CR68)		5%

C Chip component

Ceramic plate	
Polyester flat foil	
Polyester mepolesco	
Mylar (Polyester flat foil small sized)	
Micropoco	
Tubular ceramic (body colour pink or yellow/green)	
Miniature single elco	
Subminiature tantalum cap.	

*a	= 2,5 V
b	= 4 V
c	= 6,3 V
d	= 10 V
e	= 16 V
f	= 25 V
g	= 40 V
h	= 63 V
j	= 100 V
l	= 125 V
m	= 150 V
n	= 160 V
q	= 200 V
r	= 250 V
s	= 300 V
t	= 350 V
u	= 400 V
v	= 500 V
w	= 630 V
x	= 1000 V
A	= 1,6 V
B	= 6 V
C	= 12 V
D	= 15 V
E	= 20 V
F	= 35 V
G	= 50 V
H	= 75 V
I	= 80 V

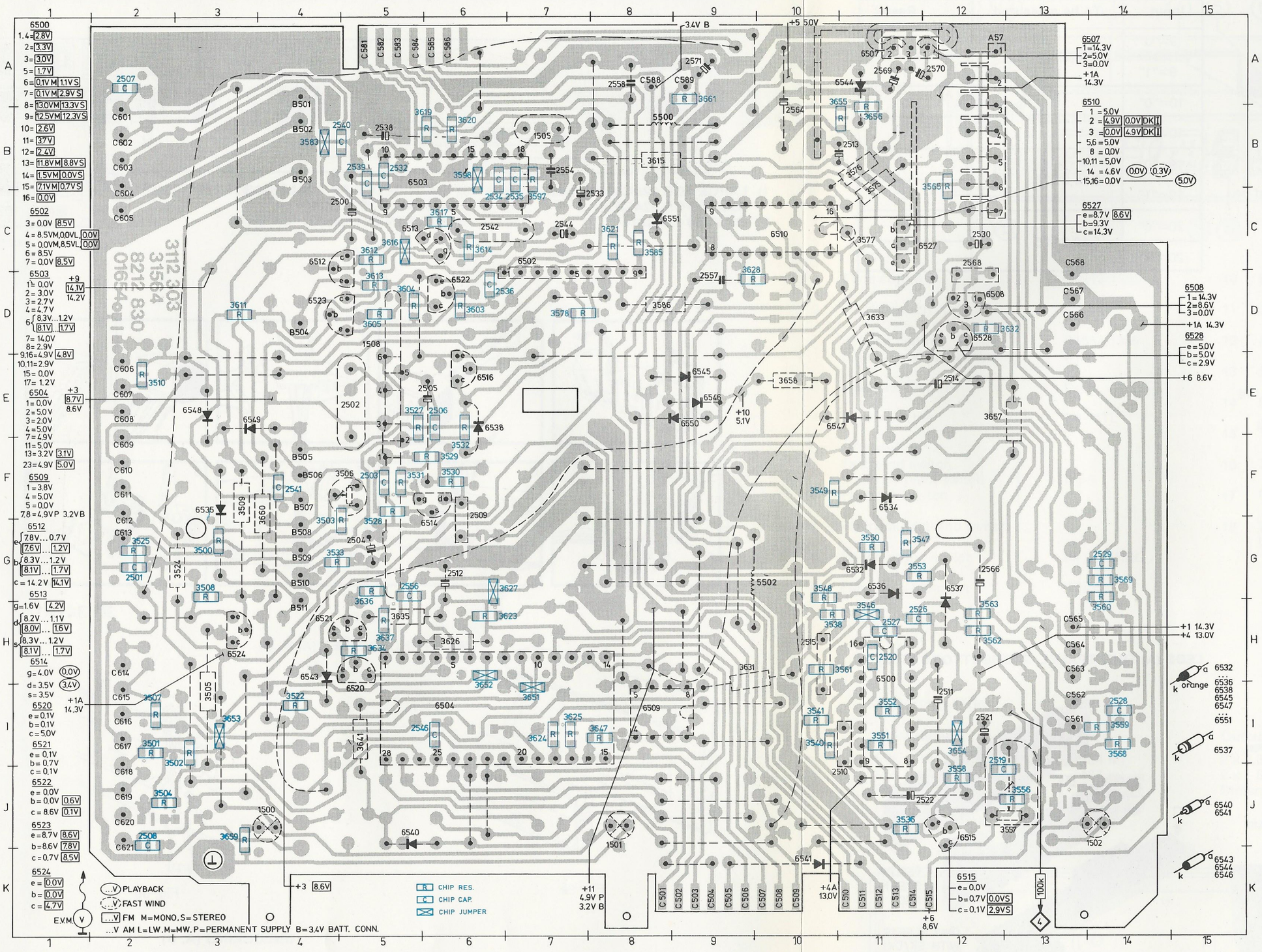

30 066 D12

COORDINATES OF PARTS

CD = CIRCUIT DIAGRAM
PCB = PANEL

ITEM	CD	PCB	ITEM	CD	PCB	ITEM	CD	PCB
1500	I21	J04	3508	F05	G03	3625	J17	I07
1501	I22	J08	3509	E05	F03	3626	H15	H06
1502	I22	J14	3510	E04	E02	3627	J12	G06
1505	I12	B07	3522	C05	I04	3628	N12	C09
1508	B08	D05	3524	B05	G03	3631	B11	H09
2500	N20	C04	3525	B05	G02	3632	H19	D13
2501	B06	G02	3527	B06	E05	3633	H19	D11
2502	D07	E05	3528	B09	F05	3634	I16	H05
2503	B09	F05	3529	B09	F06	3635	H17	H05
2504	C09	G05	3530	B10	F06	3636	I17	G05
2505	B10	E05	3531	C10	F05	3637	I17	H05
2506	C11	E07	3532	D10	F06	3641	L14	I05
2507	G05	A02	3533	D09	G04	3647	J16	I08
2508	C06	J02	3536	B11	J11	3651	L19	I07
2509	B10	F06	3538	B11	H10	3652	L19	H06
2510	C12	J10	3540	C12	I10	3653	L19	I03
2511	D12	I12	3541	D11	I10	3654	K19	I12
2512	L19	G06	3546	E11	H11	3655	J20	A11
2513	J19	B11	3547	E10	G11	3656	J21	B11
2514	E11	E12	3548	F10	G10	3657	K20	E12
2515	E11	H10	3549	E11	F10	3658	N21	E10
2519	A12	I12	3550	E11	G11	3659	J21	J03
2520	A13	H11	3551	E12	I11	3660	N20	G04
2521	A14	I12	3552	E12	I11	3661	N22	A09
2522	A15	J11	3553	F15	G11	5500	L12	B08
2526	E17	H11	3556	A13	J13	5502	K19	G10
2527	E17	H11	3557	A13	J12	6500	B16	H11
2528	B21	I14	3558	A14	J12	6502	K01	C07
2529	C21	G14	3559	A22	I14	6503	H09	B05
2530	F18	C12	3560	D22	H14	6504	I13	I06
2532	I07	B05	3561	D17	H11	6507	K20	A11
2533	L10	C07	3562	D17	H12	6508	M20	D12
2534	H11	C06	3563	E17	H12	6509	N07	I08
2535	H11	C07	3565	F18	B12	6510		C10
2536	J01	D06	3568	B21	I14	6510A	N11	
2538	L12	B05	3569	C21	G14	6510B	G13	
2539	L11	B05	3575	F19	B11	6512	K06	C04
2540	I07	B04	3576	G19	B11	6513	J06	C05
2541	J07	F04	3577	F11	C11	6514	B10	G05
2542	K07	C06	3578	G09	D07	6515	A12	J12
2544	L07	C07	3583	K06	B04	6516	F11	E07
2546	C11	I05	3585	L03	C08	6520	H16	I05
2554	I12	B07	3586	M09	D08	6521	I17	H04
2556	H15	G05	3597	H10	C07	6522	I04	D06
2557	O12	D09	3598	L11	B06	6523	I05	D04
2558	L09	A08	3603	I04	D06	6524	E05	H03
2564	J20	B10	3604	I04	D05	6527	I20	C11
2566	K20	G12	3605	I05	D05	6528	H18	D11
2568	M20	C12	3611	I07	D03	6532	E10	G11
2569	L20	A11	3612	J06	C05	6534	E11	F11
2570	L21	A12	3613	K06	D05	6535	G04	F03
2571	O22	A09	3614	K07	C06	6536	F14	G11
3500	G05	G03	3615	L07	B08	6537	F15	G12
3501	D05	I02	3616	L08	C05	6538	C10	E07
3502	D05	I02	3617	J07	C06	6540	L14	J05
3503	G05	F04	3619	L10	B05	6541	M15	K10
3504	D05	J02	3620	L10	B06	6543	H17	H04
3505	E05	I03	3621	L09	C08	6544	J21	A11
3506	G05	F04	3623	L15	H06	6545	N21	E09
3507	B05	I02	3624	J17	I07	6546	O20	E09
						6547	N21	E10
						6548	E04	E03
						6549	E04	E03
						6550	N08	E09
						6551	O21	C08

Ref.	Pos.
1050	D 9
1051	C11
2050	B 4
2051	D 4
2052	B 5
2053	B 3
2054	A 7
2055	A 7
2056	C 2
2058	D 3
2059	D 4
2060	D 4
2061	F 5
2062	E 3
2063	G 4
2065	C 8
2066	D 8
2067	E 8
2068	B 8
2069	B10
2070	D10
2071	D11
2072	D11
2073	E12
2074	E 8
2076	B12
2077	B13
2078	B13
2080	D14
2081	D13
2083	D14
2086	B15
2089	B16
2090	C16
2091	B17
2094	C18
2095	E16
2096	D16
2097	D18
2103	I 4
2104	H 6
2105	I 6
2106	I 6
2110	G10
-2111	G12
2112	I12
2115	H12
2116	I13
2119	J19
2120	J20
2121	K20
3050	B 4
3051	B 4
3052	D 4
3053	A 6
3054	D 3
3055	E 3
3056	G 4
3057	G 5
3058	C 8
3059	E 8
3060	F 9
3061	E 9
3062	C 9
3063	D 9
3064	C10
3065	D10
3066	C11
3067	B10
3068	D10
3069	B 9
3070	E12
3071	C 4
3072	B 9
3073	C13
3074	G 4
3075	E14
3076	D13
3077	B16
3078	C16
3079	B17
3080	C17
3084	B18
3085	B18
3086	C18
3087	C18
3089	D19
3090	D17
3096	I 4
3097	H 5
3098	H 5
3099	I 5
3101	F10
3103	G10
3104	H10
3106	G11
3107	G11
3108	I11
3113	I12
3115	I13
3120	G16
3122	G17
3123	G18
3126	G17
3127	H17
5050	D 4
5051	B 6
5052	C 2
5053	C 4
5054	F 6
5057	D 8
5060	B14
5061	B15
6050	C 6
6051	C11
6052(1	G18
6052(1	C19
6055	C 9
6056	J 4
6057	I 5
6060	H10
6061	H12
6065	B 5
6066	C 3
6067	G 5
6070	D 4
6071	E10
6072	B16
6073	C16
6076	I12
6077	H13

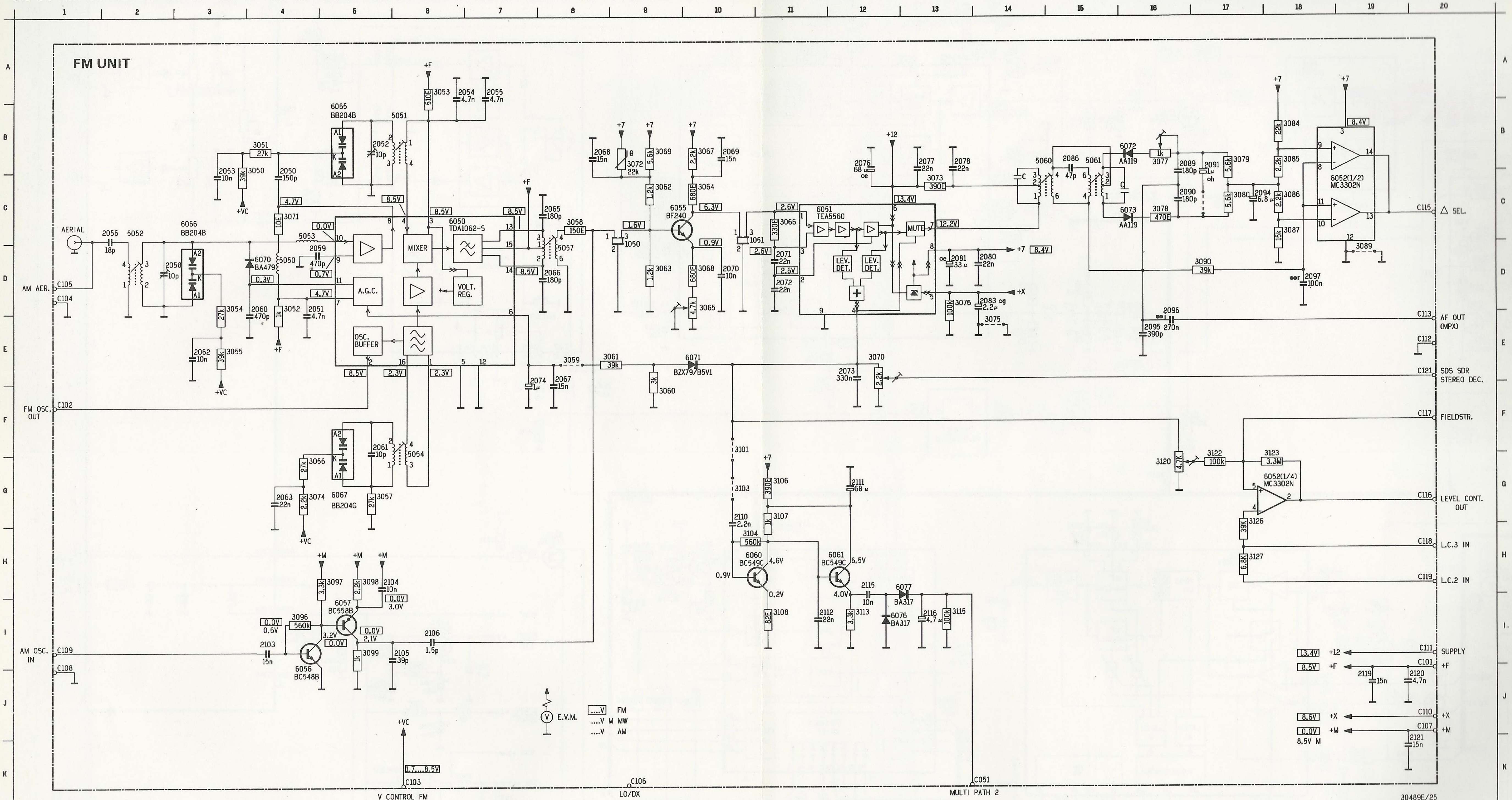

ALL RES. ARE CHIP RES.:EXCEPT 3072

ALL CAP. ARE CHIP CAP.:EXCEPT EL.CAP..CAP. WITH INDICATION AND 2061,2073.

30489E/25

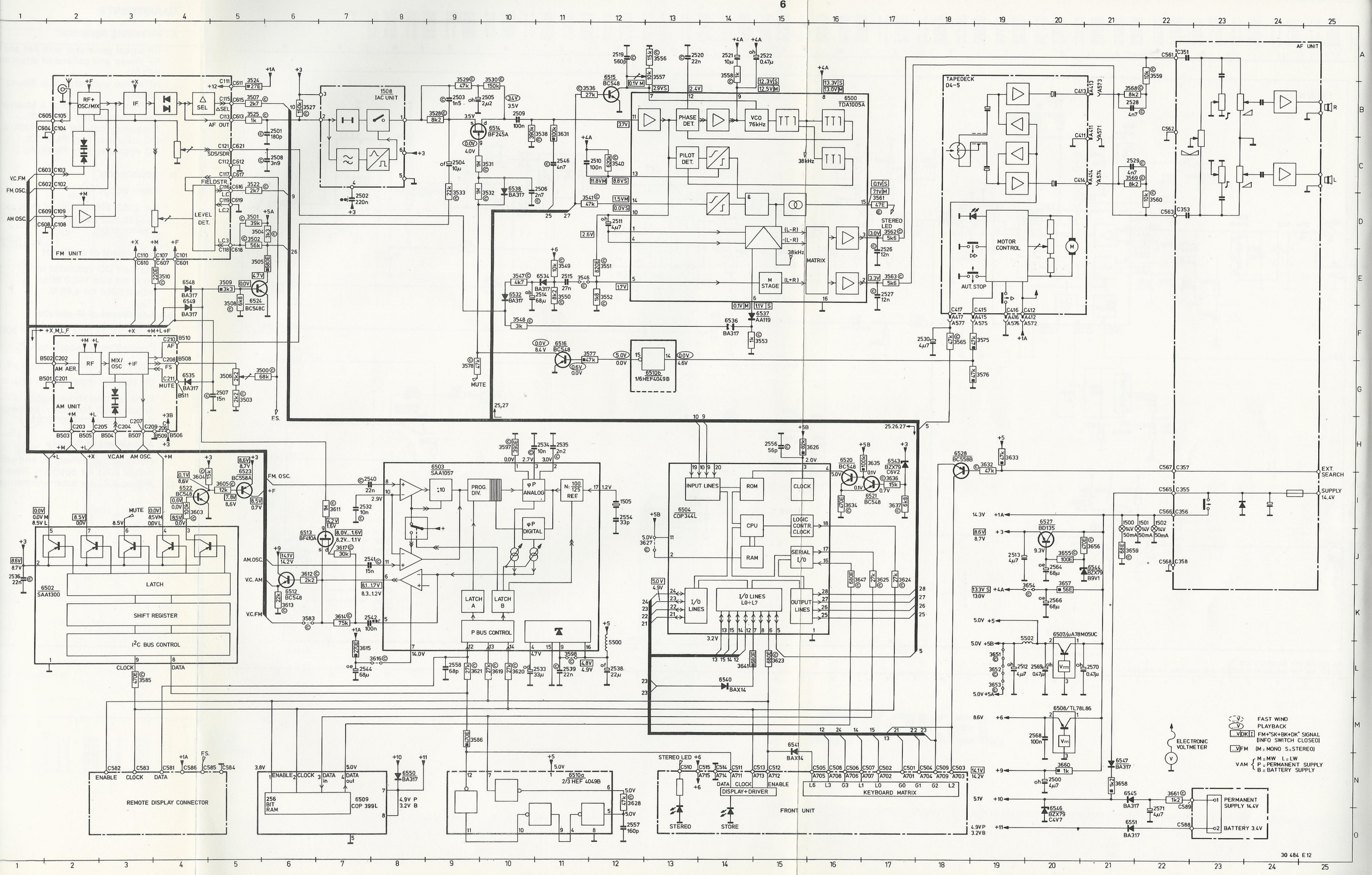
FM UNIT
AM UNIT
RF+ OSC/MIX
IF
SEL
AF OUT
SDS/SDR
FIELDSTR.
LEVEL DET.
RF
MIX/ OSC
+IF
AM AER.
MUTE
F.S.
1508 IAC UNIT
6503 SAA1057
PROG. DIV.
φP ANALOG
N: 100 125 REF
φP DIGITAL
LATCH A
LATCH B
P BUS CONTROL
6502 SAA1300
LATCH
SHIFT REGISTER
I²C BUS CONTROL
CLOCK
DATA
6504 COP344L
INPUT LINES
ROM
CPU
RAM
CLOCK
LOGIC CONTR. CLOCK
SERIAL I/O
I/O LINES
I/O LINES L0÷L7
OUTPUT LINES
6500 TDA1005A
PHASE DET.
VCO 76kHz
PILOT DET.
38kHz
M STAGE
MATRIX
STEREO LED
6510b 1/6HEF4049B
TAPEDECK D4-5
MOTOR CONTROL
AUT. STOP
AF UNIT
EXT. SEARCH
SUPPLY 14.4V
REMOTE DISPLAY CONNECTOR
ENABLE
CLOCK
DATA
256 BIT RAM
6509 COP 399L
6510a 2/3 HEF 4049B
DISPLAY+DRIVER
FRONT UNIT
STEREO
STORE
KEYBOARD MATRIX
6507/μA78M05UC
6508/TL78L86
ELECTRONIC VOLTMETER
FAST WIND
PLAYBACK
FM+"SK+BK+DK" SIGNAL (INFO SWITCH CLOSED)
FM (M = MONO S = STEREO)
M = MW L = LW
P = PERMANENT SUPPLY
B = BATTERY SUPPLY
PERMANENT SUPPLY 14.4V
BATTERY 3.4V
30 484 E 12

CS 84 42

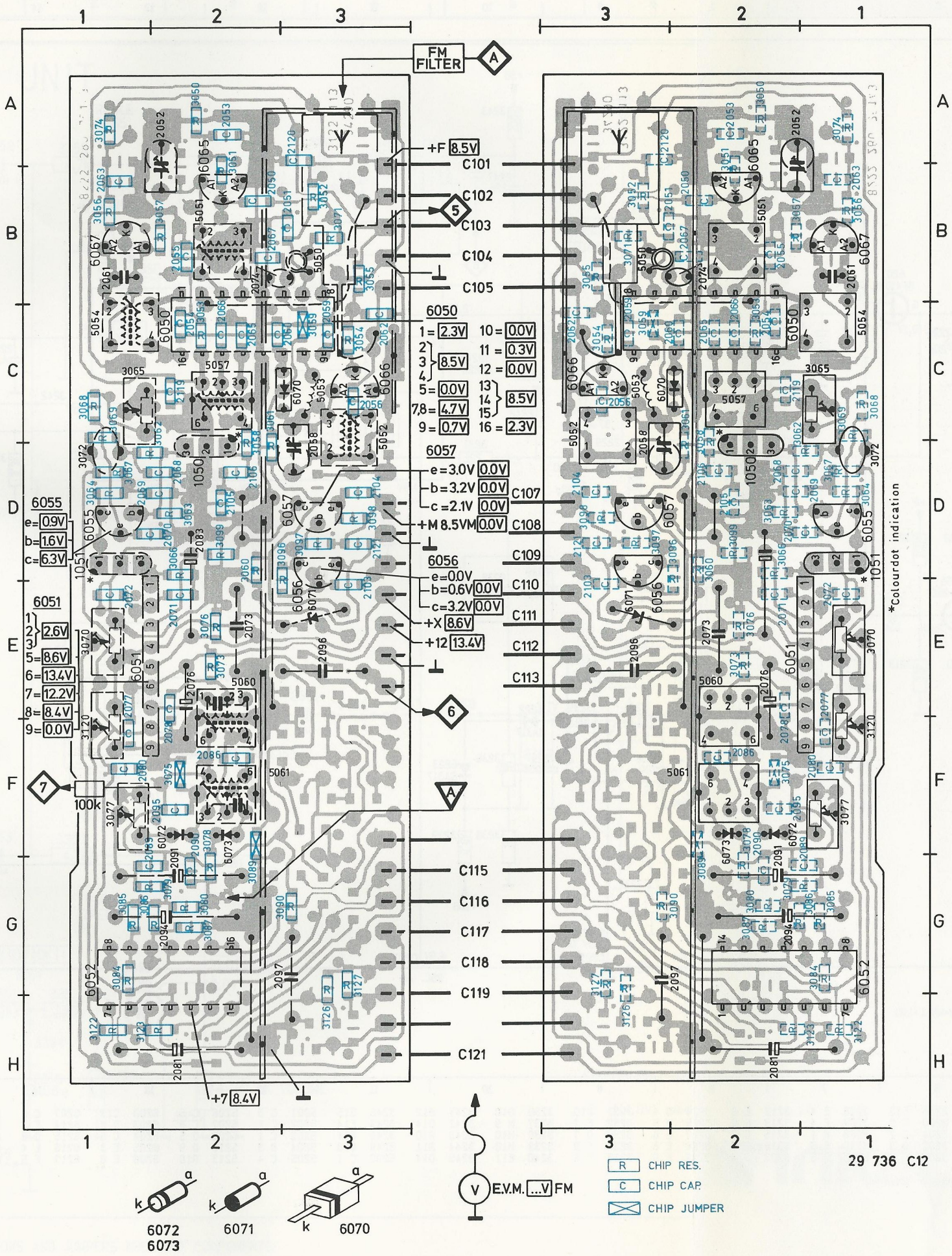

COORDINATES OF PARTS

PCB= PANEL

ITEM	PCB	ITEM	PCB
1050	D02	3064	D01
1051	D01	3065	C01
2050	B02	3066	D02
2051	B03	3067	D01
2052	A02	3068	C01
2053	A02	3069	C01
2054	C02	3070	E01
2055	B02	3071	B03
2056	C03	3072	D01
2058	D03	3073	E02
2059	C03	3074	A01
2060	C03	3075	F02
2061	B01	3076	E02
2062	C03	3077	F01
2063	B01	3078	F02
2065	C02	3079	G02
2066	C02	3080	G02
2067	B02	3084	G01
2068	D02	3085	G01
2069	D01	3086	G01
2070	D02	3087	G02
2071	E02	3089	G02
2072	E01	3090	G02
2073	E02	3096	D03
2074	B02	3097	D03
2076	E02	3098	D03
2077	E01	3099	D02
2078	F02	3120	F01
2080	F01	3122	H01
2081	H02	3123	H01
2083	D02	3126	H03
2086	F02	3127	G03
2089	F01	5050	B03
2090	F02	5051	B02
2091	G02	5052	D03
2094	G02	5053	C03
2095	F02	5054	C01
2096	E03	5057	C02
2097	G02	5060	E02
2103	E03	5061	F02
2104	D03	6050	C02
2105	D02	6051	E01
2106	D02	6052	G01
2119	C02	6055	D01
2120	A03	6056	E03
2121	D03	6057	D03
3050	A02	6065	B02
3051	B02	6066	C03
3052	B03	6067	B01
3053	C02	6070	C03
3054	C03	6071	E03
3055	B03	6072	F02
3056	B01	6073	G02
3057	B02		
3058	D02		
3059	C03		
3060	D02		
3061	C02		
3062	C02		
3063	D02		

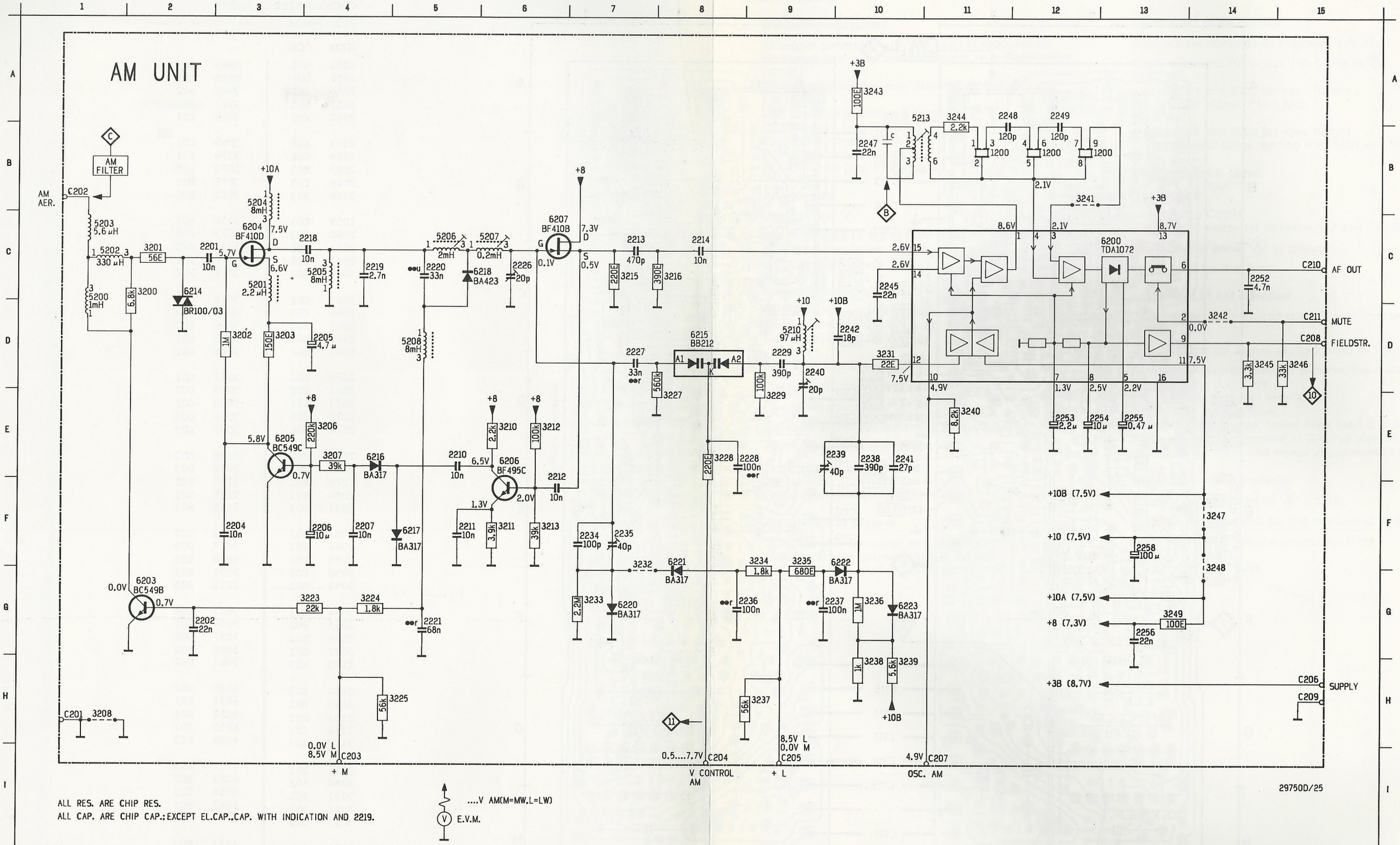

1		2		3		4		5		6		7		8		9		10		11		12		13		14		15	
1200	B11	2204	F 3	2211	F 5	2219	C 4	2228	E 9	2237	G10	2242	D10	2252	C14	2258	F13	3206	E 4	3212	E 6	3224	G 4	3231	D10	3236	G10	3241	B12
1200	B12	2205	D 4	2212	E 6	2220	C 5	2229	D 9	2238	E10	2245	C10	2253	E12	3200	C 2	3207	E 4	3213	F 6	3225	H 5	3232	F 7	3237	H 9	3242	D14
1200	B13	2206	F 4	2213	C 7	2221	G 5	2234	F 7	2239	E10	2247	B10	2254	E13	3201	C 2	3208	H 1	3215	C 7	3227	E 8	3233	G 7	3238	H10	3243	A10
2201	C 2	2207	F 4	2214	C 8	2226	C 6	2235	F 7	2240	D 9	2248	A11	2255	E13	3202	D 3	3210	E 6	3216	C 8	3228	E 8	3234	F 9	3239	H10	3244	A11
2202	G 2	2210	E 5	2218	C 4	2227	D 7	2236	G 9	2241	E10	2249	A12	2256	G13	3203	D 3	3211	F 6	3223	G 4	3229	E 9	3235	F 9	3240	E11	3245	D14

1		2		3		4		5		6		7		8		9		10		11		12		13		14		15	
3246	D15	5201	C 3	5206	C 5	6200	C13	6207	C 6	6218	C 6																		
3247	F14	5202	C 1	5207	C 6	6203	G 2	6214	C 2	6220	G 7																		
3248	F14	5203	C 1	5208	D 5	6204	C 3	6215	D 8	6221	F 8																		
3249	G13	5204	B 3	5210	D 9	6205	E 3	6216	E 4	6222	F10																		
5200	C 1	5205	C 4	5213	A10	6206	E 6	6217	F 5	6223	G10																		

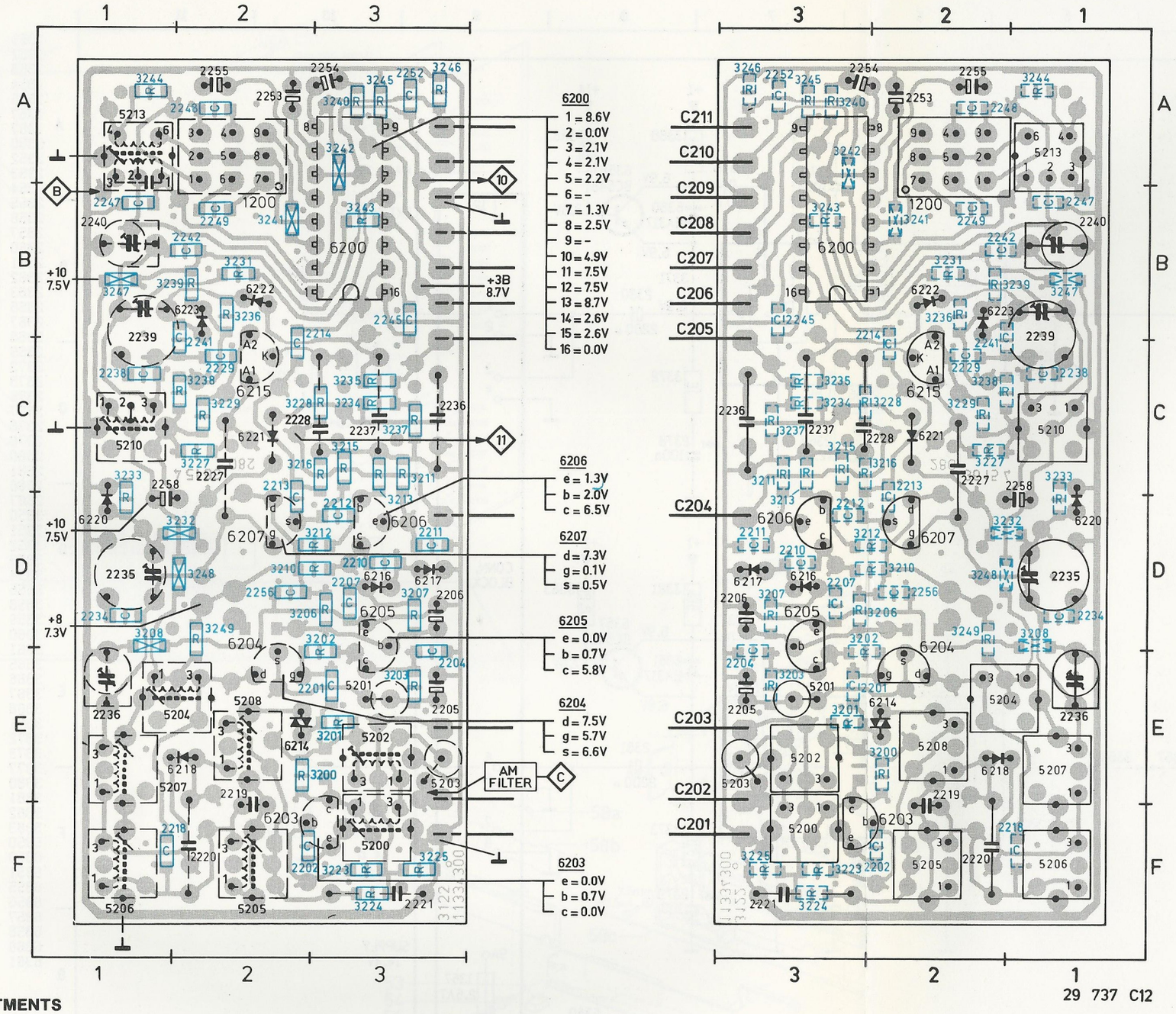

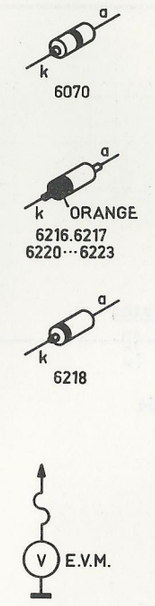

COORDINATES OF PARTS

PCB= PANEL

ITEM	PCB	ITEM	PCB
1200	B02	3233	C01
2201	E02	3234	C03
2202	F02	3236	B02
2204	E03	3237	C03
2205	E03	3238	C02
2206	D03	3239	B01
2207	D03	3240	A03
2210	D03	3241	B02
2211	D03	3242	A03
2212	D03	3243	B03
2213	C02	3244	A01
2214	B02	3245	A03
2218	F01	3246	A03
2219	E02	3247	B01
2220	F02	3248	D02
2221	F03	3249	D02
2227	C02	3255	C03
2228	C02	5200	F03
2229	C02	5201	E03
2234	D01	5202	E03
2236	C03	5203	E03
2236	E01	5204	E01
2237	C03	5205	F02
2238	C01	5206	F01
2239	B01	5207	E01
2240	B01	5208	E02
2241	C02	5210	C01
2242	B01	5213	A01
2245	B03	6200	B03
2245	D01	6203	F02
2247	B01	6204	D02
2248	A01	6205	D03
2249	B02	6206	D03
2252	A03	6207	D02
2253	A02	6214	E02
2254	A02	6215	C02
2255	A02	6216	D03
2256	D02	6217	D03
2258	C01	6218	E01
3200	E03	6220	D01
3201	E03	6221	C02
3202	D02	6222	B02
3203	E03	6223	B02
3206	D02		
3207	D03		
3208	D01		
3210	D02		
3211	C03		
3212	D02		
3213	D03		
3215	C03		
3216	C02		
3223	F03		
3224	F03		
3225	F03		
3227	C02		
3228	C02		
3229	C02		
3231	B02		
3232	D01		

ADJUSTMENTS

a. Measuring equipment

- RF signal generator with AM modulation and RF sweep (e.g. PM5326).
- Oscilloscope with external trigger input (e.g. PM3212).
- DC voltmeter (e.g. PM2430).
- AC voltmeter (e.g. PM2454).

b. Adjustment IF circuit

- Connect DC voltmeter to ⑩.
- Inject IF signal (468 kHz, AM modulated) to Ⓑ.
- Adjust 5213 for max. reading.

c. Adjustment of oscillator

- Connect DC voltmeter to ⑪.
- MW.
  Tune to 512 kHz.
  Adjust 5210 for V= 0,5 V.
  Tune to 1635 kHz.
  Adjust 2240 for V= 8,0 V.
  Repeat.
- LW
  Tune to 267 kHz.
  Adjust 2239 for 8,0 V.
  Tune to f < 618 kHz.
  Check: V= 0,5 V.

d. Adjustment of RF circuits

- Apply signal to Ⓒ.
- Tune set to frequency of signal generator.
- Connect AC voltmeter to ⑧ (LS-R).
- Adjust for max. meter reading.
- MW.
  Signal of 650kHz. Adjust: 5207.
  Signal of 1500 kHz. Adjust: 2226.
  Repeat.
- LW.
  Signal of 175 kHz. Adjust: 5206.
  Signal of 250 kHz. Adjust: 2235.
  Repeat.

Note:
Adjustment of 5200, 5202, 5204, 5205, 5208 is not required.
These components only serve as choke.

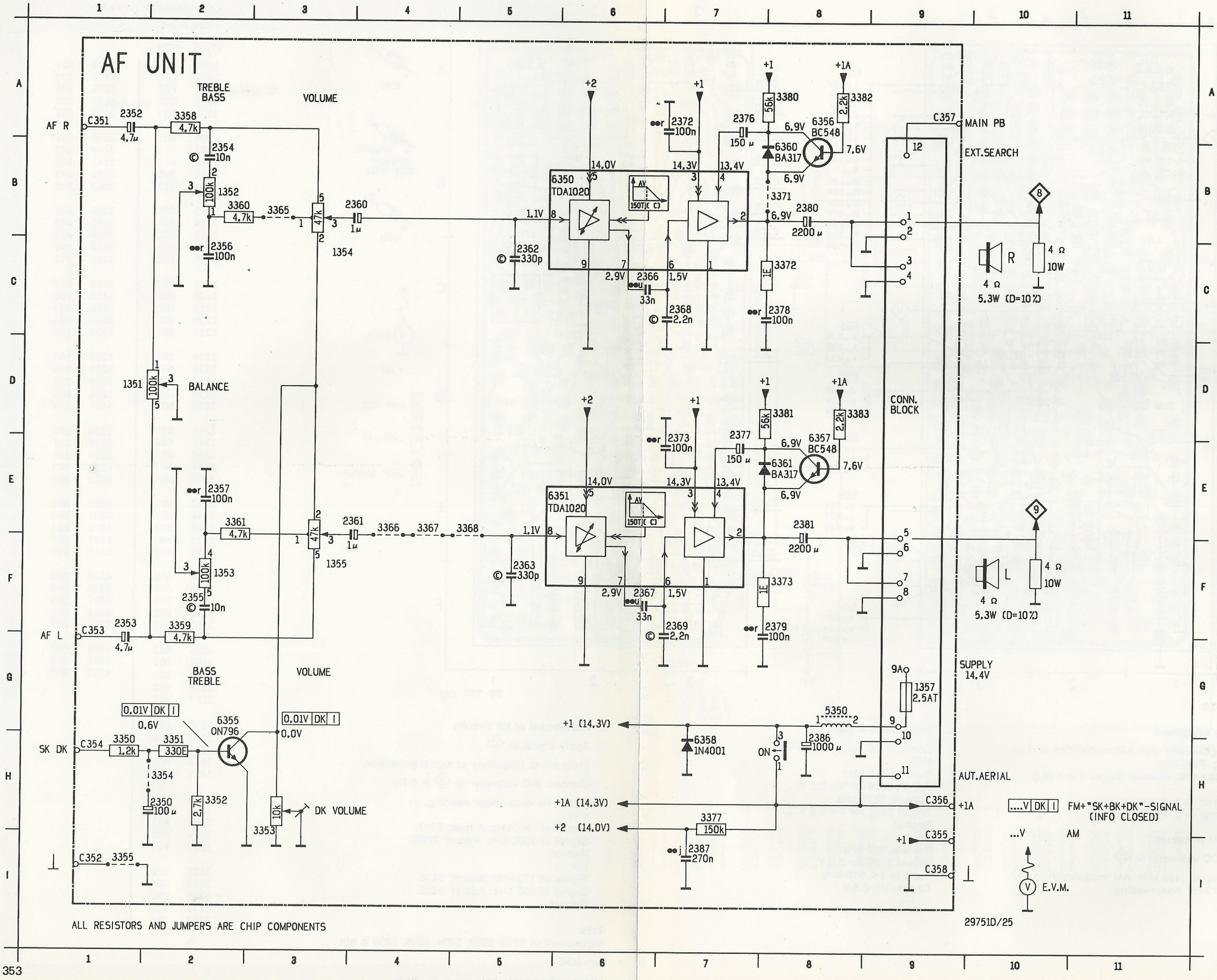

ALL RESISTORS AND JUMPERS ARE CHIP COMPONENTS

1351	D	1
1352	B	2
1353	F	2
1354	C	3
1355	F	3
1357	G	9
1357	G	9
2350	H	2
2352	A	1
2353	F	1
2354	B	2
2355	F	2
2356	C	2
2357	E	2
2360	B	4
2361	E	4
2362	C	5
2363	F	5
2366	C	6
2367	F	6
2368	C	7
2369	F	7
2372	A	7
2373	D	7
2376	A	7
2377	D	7
2378	C	8
2379	F	8
2380	B	8
2381	E	8
2386	H	8
2387	I	7
3350	H	1
3351	H	2
3352	H	2
3353	H	3
3354	H	2
3355	I	1
3358	A	2
3359	F	2
3360	B	2
3361	E	2
3365	B	3
3366	E	4
3367	E	4
3368	E	5
3371	B	8
3372	C	8
3373	F	8
3377	H	7
3380	A	8
3381	D	8
3382	A	8
3383	D	8
5350	G	8
6350	B	6
6351	E	6
6355	G	2
6356	A	8
6357	D	8
6358	H	7
6360	B	8
6361	E	8

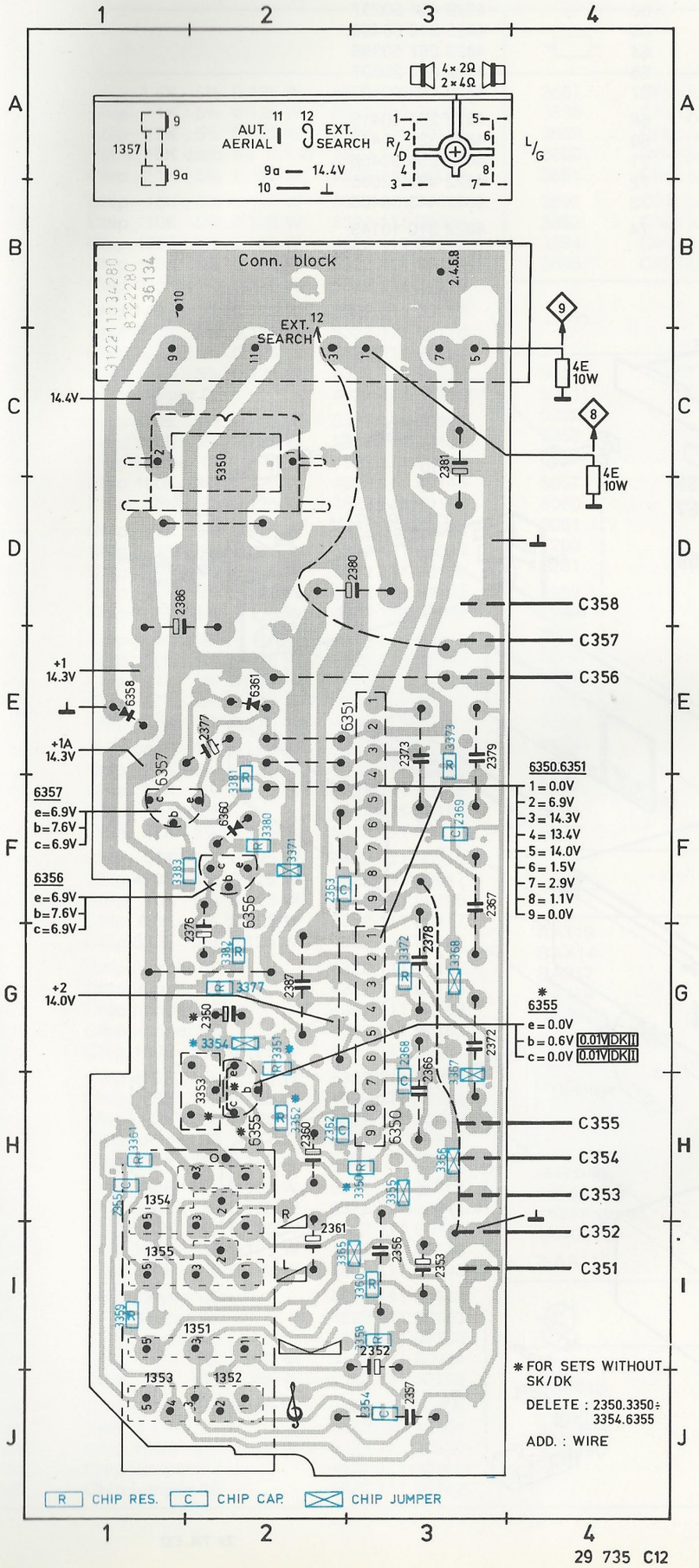

COORDINATES OF PARTS

PCB= PANEL

ITEM	PCB	ITEM	PCB
1351	I02	2386	D01
1352	J02	2387	G01
1353	J01	3350	H03
1354	H01	3351	G01
1355	I01	3352	H02
1357	A01	3352	H02
2350	G01	3354	G01
2352	I03	3355	H03
2353	I03	3358	I03
2354	J03	3359	I01
2355	H01	3360	I03
2356	I03	3361	H01
2357	J03	3365	I02
2360	H02	3366	H03
2361	I02	3367	H03
2362	H02	3368	G03
2363	F02	3371	F02
2366	H03	3372	G03
2367	F03	3373	E03
2368	G03	3377	G01
2369	F03	3380	F02
2372	G03	3381	F02
2373	E03	3383	F01
2376	G01	5350	D02
2377	E02	6350	H03
2378	G03	6351	E02
2379	E03	6355	H02
2380	D03	6357	F01
2381	C03	6358	E01
2382	G01	6360	F02
		6361	E02

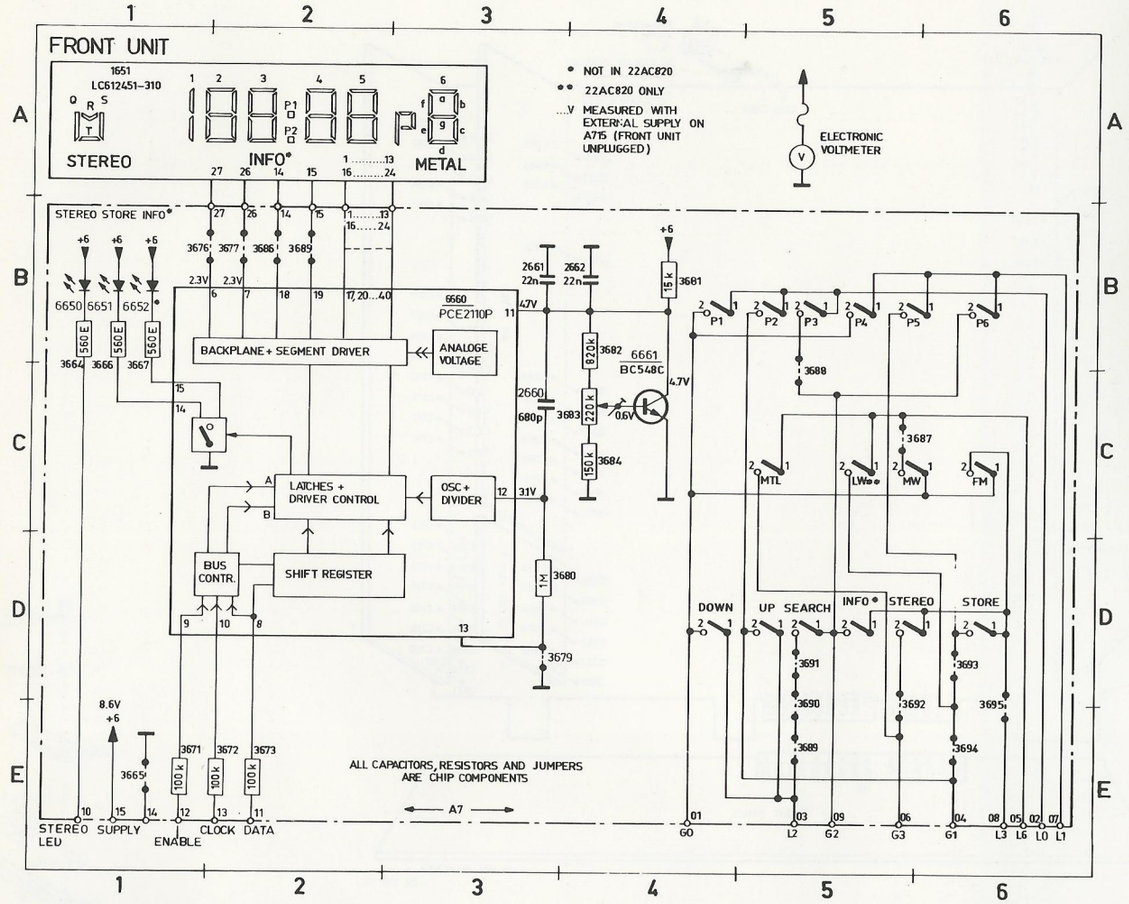

COORDINATES OF PARTS

CD = CIRCUIT DIAGRAM
PCB = PANEL

ITEM	CD	PCB	ITEM	CD	PCB	ITEM	CD	PCB	ITEM	CD	PCB
1651	A01	B08	3673	E02	B08	3686	B02	B09	6650	B01	D02
2660	C03	B08	3676	B01	B07	3687	C05	C02	6651	B01	D01
2661	B03	B10	3677	B02	B08	3688	B05	C02	6652	B01	D02
2662	B04	B10	3679	D03	B10	3689	E05	A06	6660	B03	B07
3664	B01	B07	3680	D03	B08	3690	D05	A07	6661	B04	C10
3665	E01	B08	3681	B04	B10	3691	D05	A07			
3666	B01	D01	3682	B04	C10	3692	D05	C02			
3667	B01	B08	3683	C03	B11	3693	D06	C02			
3671	E01	B08	3684	C04	B10	3694	E06	B03			
3672	E02	B08	3685	B02	B09	3695	D06	C03			

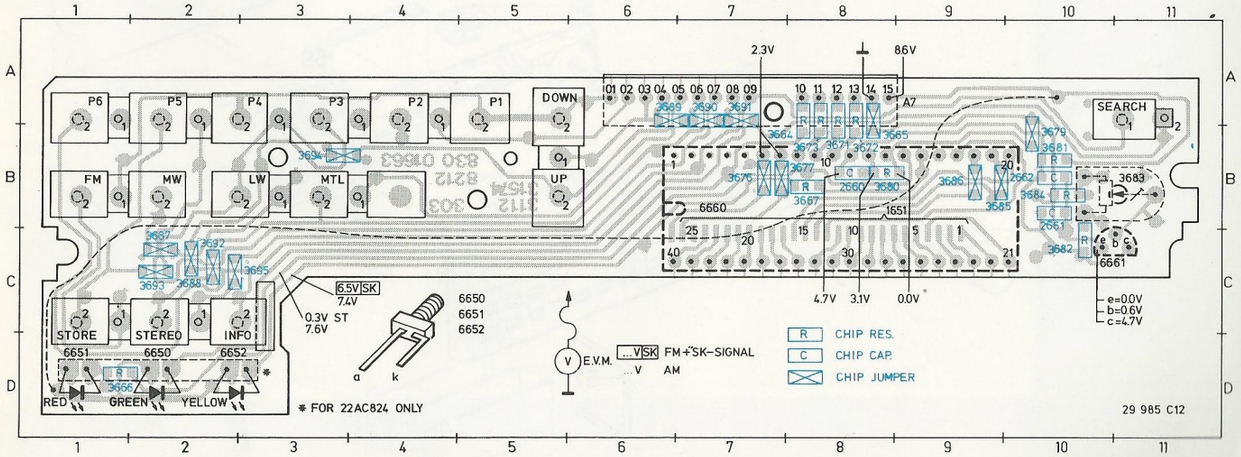

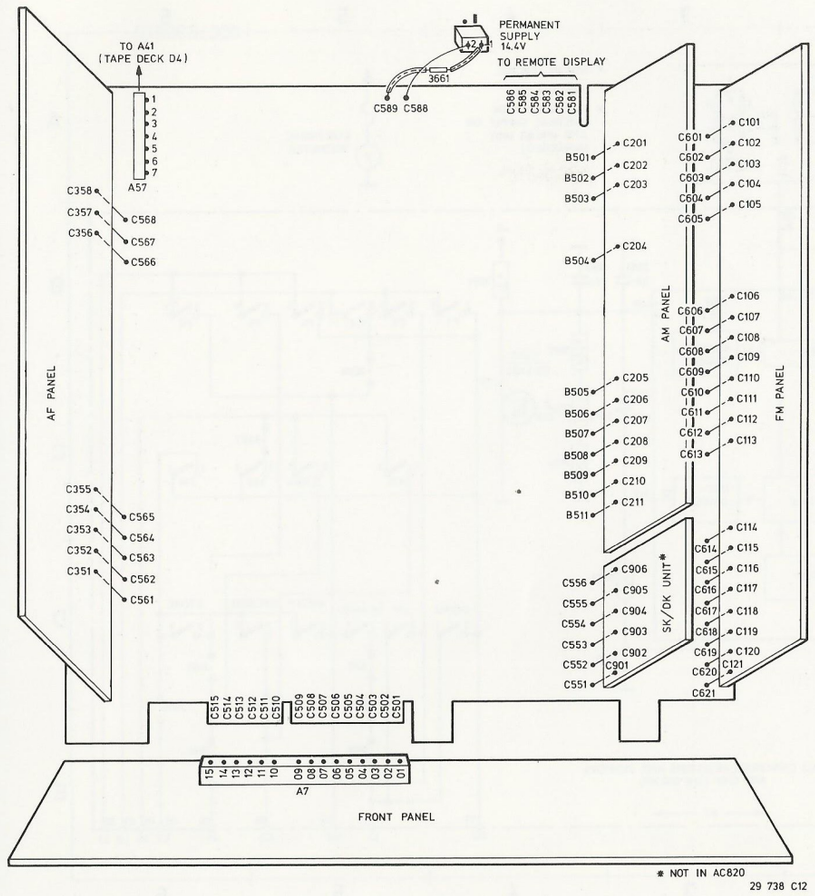

51/00/38/62/78	4822 460 20414	62	4822 464 50237
51/22	4822 460 20396	63	4822 310 30499
52	4822 310 30498	64	4822 267 50396
53	4822 410 22804	66	4822 321 20597
54	4822 535 91438	67	4822 423 90107
56	4822 256 90457	68	4822 267 40415
57	4822 404 20437	69	4822 321 20448
58	4822 443 60992	71	4822 256 90456
59	4822 460 20395	72	4822 492 62695
61	4822 218 10146	73	4822 443 30463
		74	4822 310 10149

29 774 E12

CS 84 423

At temperatures below zero a detuning of 200 kHz might occur on FM.
This can be prevented as follows:

- Connect an electrolyte tantalum capacitor 2543 - 2.2 μF - 16 V - 4822 124 10384 between connecting pins B506 (+) and C612 (—) on the main PCB. Since the electrolytic capacitor is connected at the conductor side (housing in hole between 3524 and 6535) the connecting wires should be insulated.
- Interrupt the conductor between connecting pin B506 and the jumper.
- Apply a chip resistor 3609 - 10E - 5322 111 90095 across this conductor interruption.

In the production the above-mentioned change has been introduced under code WA02.

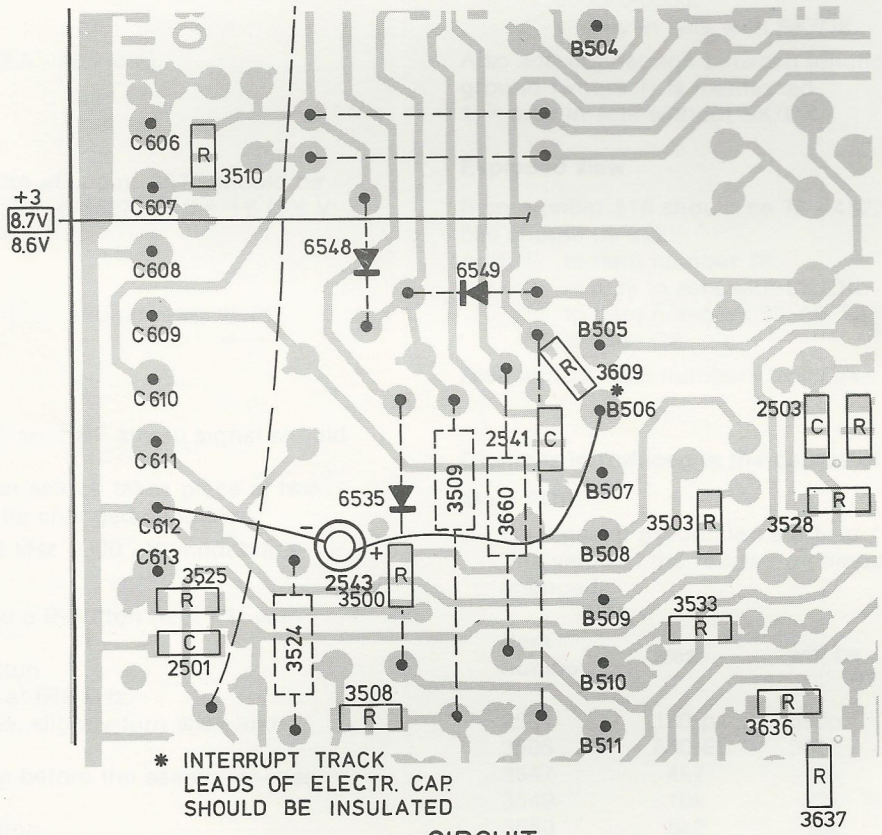

CIRCUIT:

AM UNIT

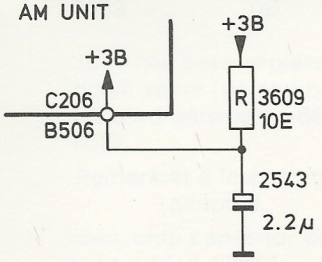

31471A 20

Copyright reserved Confidential information for Service-dealers

Printed in the Netherlands

Corrections to the Service Documentation

Front page

Add the following sentence: For servicing information on the tape deck see Service Documentation of Car radio Cassette Deck D4-5 (22AC820) and D4-6 (22AC824) resp.

Controls

The store switch is 11 instead of 10 and the store indicator is 10 instead of 11.

Specification

The FM waverange is 87.5 - 108 MHz.

Servicing hints

Sub point 1
To prevent damage to the μC point A575 should be connected to the +3 (8.7 V: e-6527) or the +6 (8.6 V: 2-6508).

Sub point 9
"INFO-button depressed, ..." should read "INFO switched on, ...".

Adjustment of set

The amplitude of the 96 MHz RF stereo signal should be 100 μV (point b5).
Since the AM transmitter search takes place at two levels, point b6 should be changed as follows:

- Apply RF signal 648 kHz - 300 μV, modulation 1 kHz, to ⟨C⟩.
- Select MW and store a P-button (e.g. P1) with 600 kHz.
- Depress Search-button.
- Search should stop at 648 kHz.
- If this is not the case, slightly turn 3506 and depress button P1.
  This should be done before the search reaches 648 kHz again.
- Depress Search-button.
- Search should stop at 648 kHz.
- If necessary, repeat adjustment of 3506.

FM unit, circuit diagram

The circuit section from junction 2073/3070/3101/3120/6071 till connecting pin C051 should be omitted.

FM adjustment

The RF signal under b2 should be: 93 MHz - 10 μV, Δf = 22.5 kHz, FM modulation 1 kHz.
The signal under b7 should be: as b2 but ⩾ 1 mV, modulation 400 Hz.

AM adjustment

The frequencies and voltages mentioned sub point c apply to adjustment of a separate AM unit. In case of adjustment in a set the values below apply:

513 kHz: 5210 → V = 0.5 V 1605: 2240 → V = 7.75 V
260 kHz: 2239 → V = 6.75 V 154: check → V = 1.0 V

Circuit diagram AF unit 22AC820

Add: * to 2350, 3350, 3351, 3352, 3353, 3354, 6355 and the connection of junction 1354/1355 to 3353/c-6355.
* = only in sets with SK/DK.

Also add connection between junction 1354/1355 and ground (where 1) is mentioned.
1)= only in sets without SK/DK.

Exploded view

Item number 516 should be 70 - 4822 214 50319; item 62c should be 522.
Add: * to item number 70.
* = only in sets with SK/DK.
** to item numbers 57, 69, 72, 73
** not in -/38.

Also added: item numbers 523, 524.

Changes introduced in the course of production

Main PCB

a. Changes at production start-up
. The value of the following components has been changed

Item number	was	will be	code number
2501	180 p	390p	4822 122 31771
3505	680 E	390E	
3547	4k7	10k	5322 111 90093
3549	10k	22k	5322 111 90103
3550	8k2	18k	4822 111 90238
3551	820E	1k3	4822 111 90244
3583	0E	2k7	4822 111 90179

. 3611 has been replaced by a carbon resistor of equal value (▲) and been displaced. It is now situated between g-6513 and junction 3604/3605/c-6522.

Remark: at a later stage the local conductor will be adapted.

. 2545, chip capacitor 680p, 4822 122 31809, has been added //3614.
. 2544 has been changed to a single-ended version, 4822 124 40193.

Copyright reserved. Confidential information for Service-dealers

Printed in the Netherlands

b. In week 246 the cooling fin of 6527 has been changed, see exploded view.

Reason: prevent the risk of short-circuit with the tape deck.

FM unit

a. Changes at production start-up

. 1050, 1051 have been changed to a version with red, orange or white colour dot. In view of standardization only the version with **red** colour dot will be supplied, code number 4822 242 70665.

Remark: if a resonator having a different colour dot is defective both resonators should be replaced by one with a red dot.

. 2104, 2105 and 3098 have been deleted; 2107 (150p - △△j) has been added between junction 3096/3097/c-6056 and b-6057; 3091 (5k6 - 5322 111 90114) has been added between 2107 and b-6057.

. 3115, 3118 (chip resistor, 100k, 4822 111 90148) added in series between 7-6052 and ground.

. The value of 3085 and 3086 has been changed to 2k - 4822 111 90165; the value of 3123 to 8M2 - 4822 111 90237.

. 6051 has been changed to 4822 209 81556 (= TEA5560N3). The mentioned code number 4822 209 81018 (= TEA5560N2) should not be used in the 22AC820 and 22AC824.

. The screening partition (item 519 in the exploded view) has been split in 2 parts, as a result of this 6050 is clear.

b. In week 241 3095 (chip 15E - 4822 111 90292) has been added between pin 4 of 5054 and pin 16 of 6050. Moreover, the conductor between these pins has been interrupted.

Reason: preventing UHF oscillation.

. In week 242 3076 has been deleted.
Reason: appeared to be superfluous.

AM unit

. Upon production start-up 6214 has been replaced by 2x BZX79/C5V6 in series (6213, 6214 - 4822 130 34173), anode 6213 to junction 2201/3201, cathode 6213 to cathode 6214.
At a later stage the local conductor will be adapted.

. In week 244 the value of 2241 has been changed to 10 pF (4822 122 31776).

Reason: simpler adjustment of 2239.

Remark: in view of supply problems 2241 has been omitted in a number of sets.

List of mechanical parts

. Upon production start-up the below parts have been modified for -/62.

51	-	4822 460 20457
52	-	4822 310 30516
53	-	4822 410 23046
58	-	4822 443 61106

Reason: new styling for -/62.

Ref.	Loc.	Ref.	Loc.	Ref.	Loc.	Ref.	Loc.	Ref.	Loc.
1050	D 9	1051	C11	2050	B 4	2051	D 4	2052	B 5
2053	B 3	2054	A 7	2055	A 7	2056	C 2	2058	D 3
2059	D 4	2060	D 4	2061	F 5	2062	E 3	2063	G 4
2065	C 8	2066	D 8	2067	E 8	2068	B 8	2069	B10
2070	D10	2071	D11	2072	D11	2073	E12	2074	E 8
2076	B12	2077	B13	2078	B13	2080	D14	2081	D13
2083	D14	2086	B15	2089	B16	2090	C16	2091	B17
2094	C18	2095	E16	2096	D16	2097	D18	2103	I 4
2106	I 6	2107	I 5	2119	J19	2120	J20	2121	K20
3050	B 4	3051	B 4	3052	D 4	3053	A 6	3054	D 3
3055	E 3	3056	G 4	3057	G 5	3058	C 8	3059	E 8
3060	F 9	3061	E 9	3062	C 9	3063	D 9	3064	C10
3065	D10	3066	C11	3067	B10	3068	D10	3069	B 9
3070	E12	3071	C 4	3072	B 9	3073	C13	3074	G 4
3075	E14	3077	B16	3078	C16	3079	B17	3080	C17
3084	B18	3085	B18	3086	C18	3087	C18	3089	D19
3090	D17	3091	H 5	3095	F 6	3096	I 4	3097	H 5
3099	I 5	3115	I13	3118	H14	3120	G16	3122	G17
3123	G18	3126	G17	3127	H17	5050	D 4	5051	B 6
5052	C 2	5053	C 4	5054	F 6	5057	D 8	5060	B14
5061	B15	6050	C 6	6051	C11	6052*	G18	6052*	C19
6052*	H14	6055	C 9	6056	J 4	6057	I 5	6065	B 5
6066	C 3	6067	G 5	6070	D 4	6071	E10	6072	B16
6073	C16								

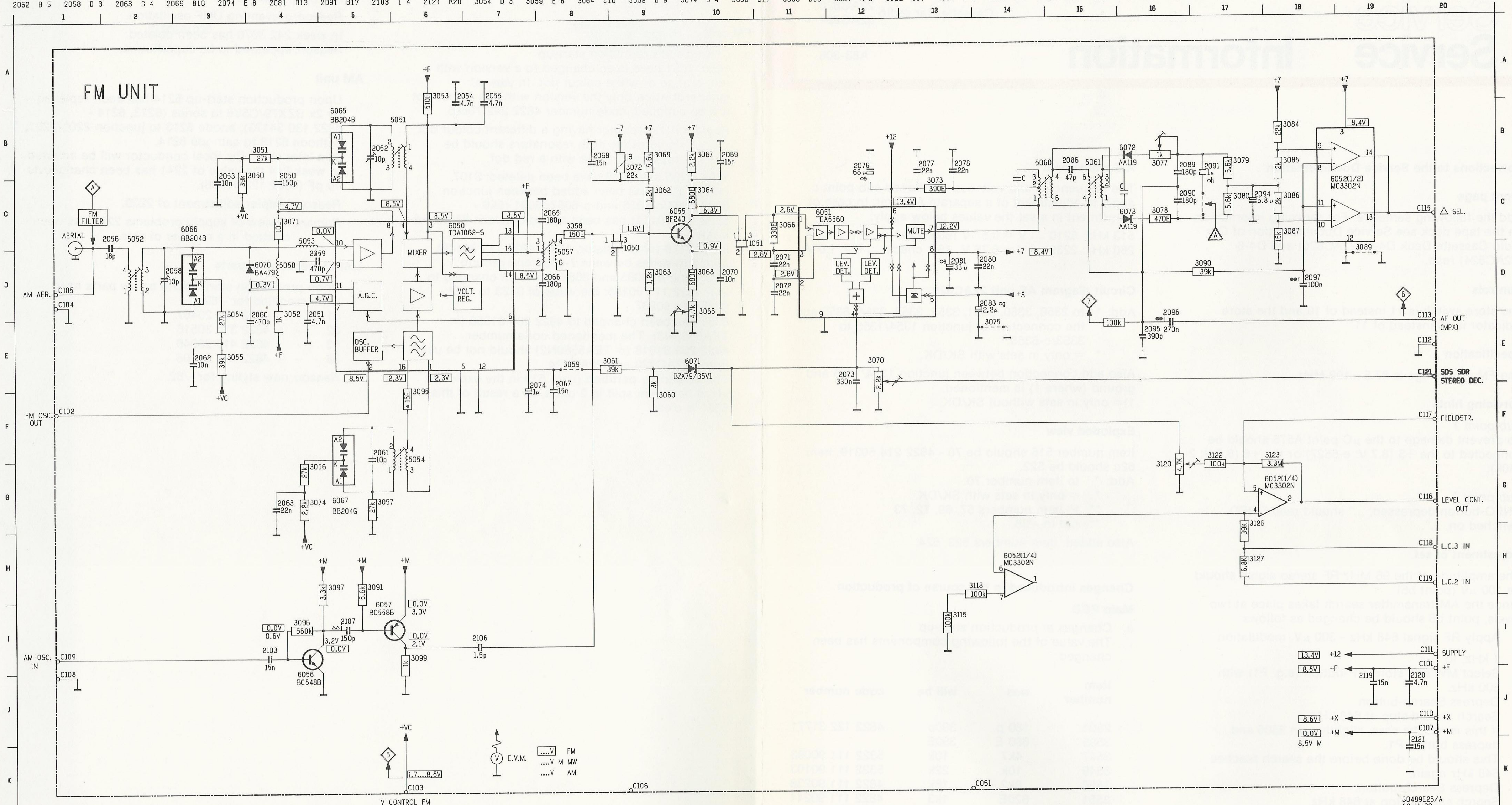

ALL RES. ARE CHIP RES.:EXCEPT 3072

ALL CAP. ARE CHIP CAP.:EXCEPT EL.CAP.,CAP. WITH INDICATION AND 2061,2073.

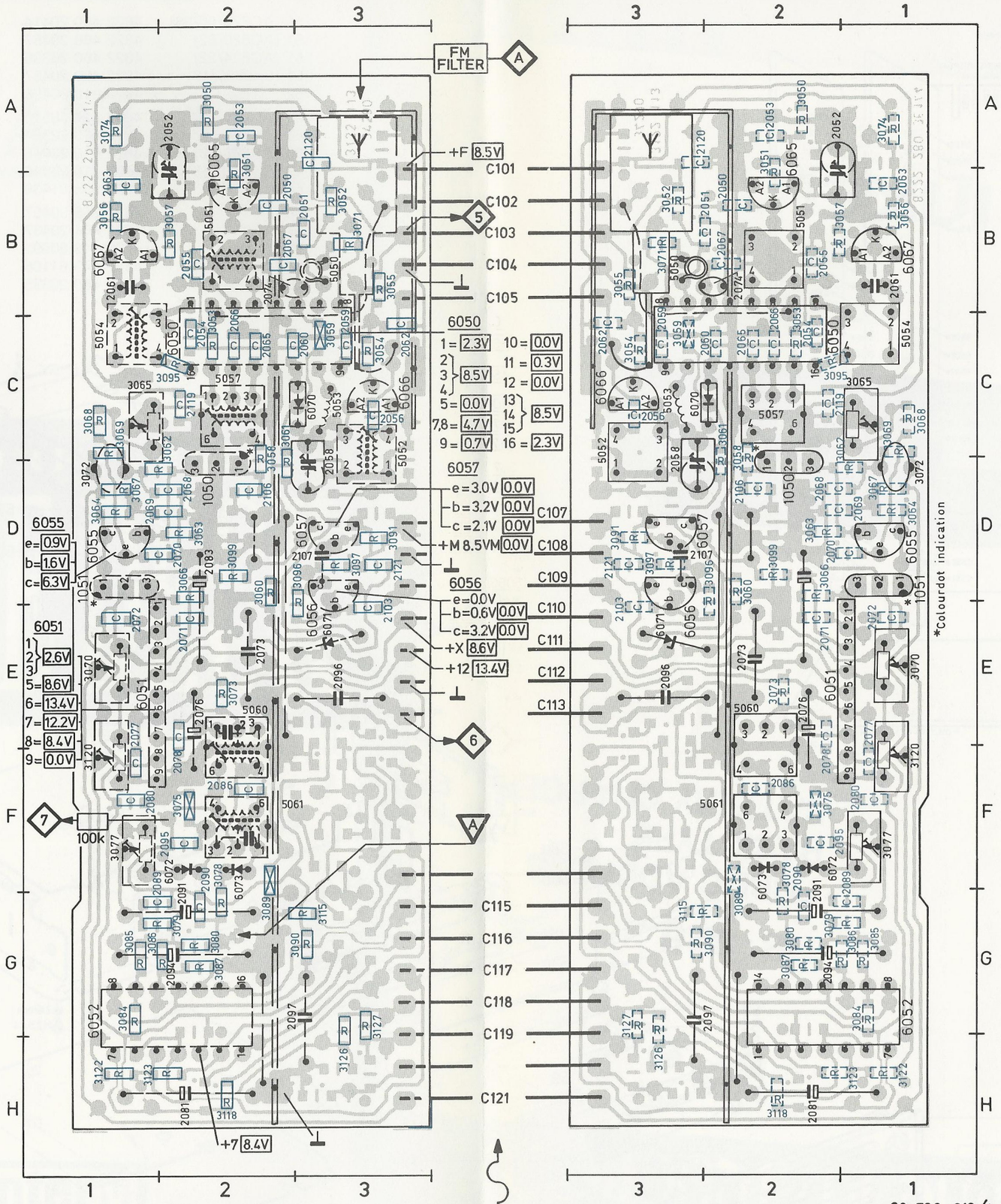

ITEM	PCB		
1050	D02	3060	D02
1051	D01	3061	C02
2050	B02	3062	C02
2051	B03	3063	D02
2052	A02	3064	D01
2053	A02	3065	C01
2054	C02	3066	D02
2055	B02	3067	D01
2056	C03	3068	C01
2058	D03	3069	C01
2059	C03	3070	E01
2060	C03	3071	B03
2061	B01	3072	D01
2062	C03	3073	E02
2063	B01	3074	A01
2065	C02	3075	F02
2066	C02	3077	F01
2067	B02	3078	F02
2068	D02	3079	G02
2069	D01	3080	G02
2070	D02	3084	G01
2071	E02	3085	G01
2072	E01	3086	G01
2073	E02	3087	G02
2074	B02	3089	G02
2076	E02	3090	G02
2077	E01	3095	C02
2078	F02	3096	D03
2080	F01	3097	D03
2081	H02	3099	D02
2083	D02	3120	F01
2086	F02	3122	H01
2089	F01	3123	H01
2090	F02	3126	H03
2091	G02	3127	G03
2094	G02	5050	B03
2095	F02	5051	B02
2096	E03	5052	D03
2097	G02	5053	C03
2103	E03	5054	C01
2106	D02	5057	C02
2107	D03	5060	E02
2119	C02	5061	F02
2120	A03	6050	C02
2121	D03	6051	E01
3050	A02	6052	G01
3051	B02	6055	D01
3052	B03	6056	E03
3053	C02	6057	D03
3054	C03	6065	B02
3055	B03	6066	C03
3056	B01	6067	B01
3057	B02	6070	C03
3058	D02	6071	E03
3059	C03	6072	F02
		6073	G02

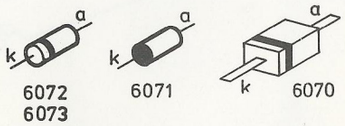

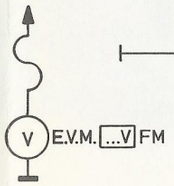

R CHIP RES.
C CHIP CAP.
CHIP JUMPER

29 736 C12/A

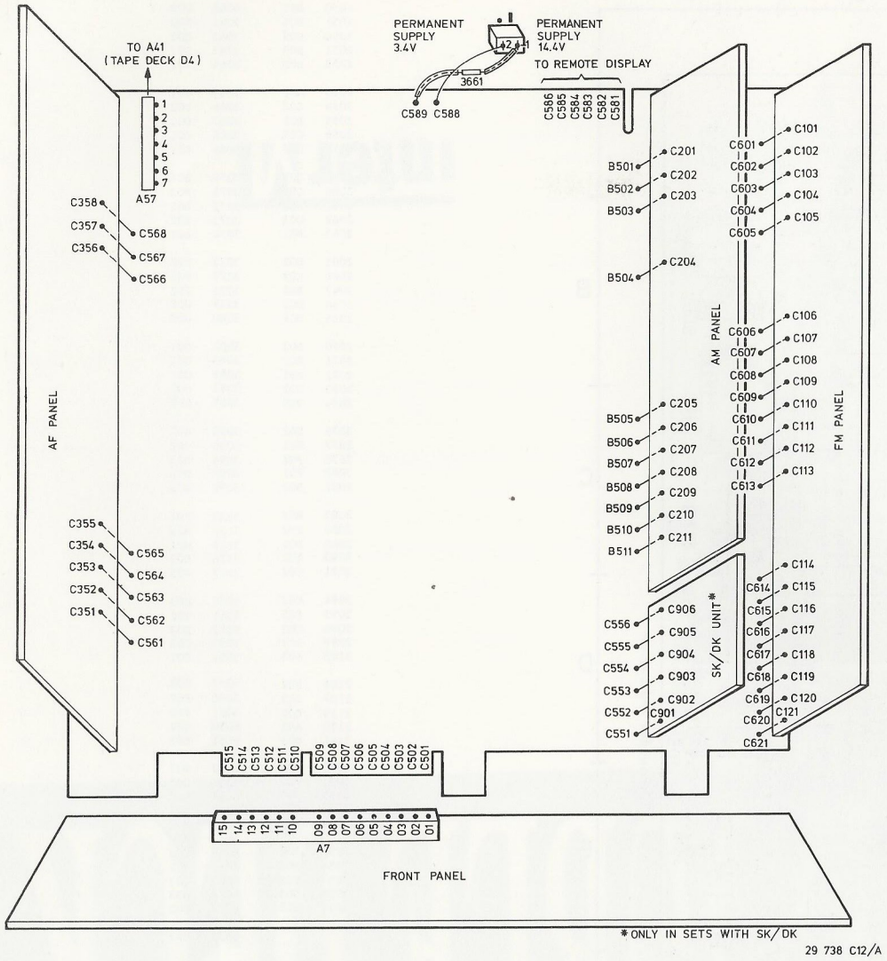

29 738 C12/A

51 (AC820/00/38)	4822 460 20414
51 (AC820/62)	4822 460 20457
51 (AC824/22)	4822 460 20396
51 (SX9820/18)	4822 460 20457
52	4822 310 30498
52 (AC820/62)	4822 310 30516
53	4822 410 22804
53 (AC820/62)	4822 410 23046
53 (SX9820/18)	4822 410 23046
54	4822 535 91438
56	4822 256 90457
57**	4822 404 20437
58	4822 443 60992
58 (AC820/62)	4822 443 61106
59	4822 460 20395
61	4822 218 10146
62	4822 464 50237
63	4822 310 30499
64	4822 267 50396
66	4822 321 20597
67	4822 423 90107
68	4822 267 40415
69**	4822 321 20448
70*	4822 214 50319
71	4822 256 90456
72**	4822 492 62695
73**	4822 443 30463
74	4822 310 10149

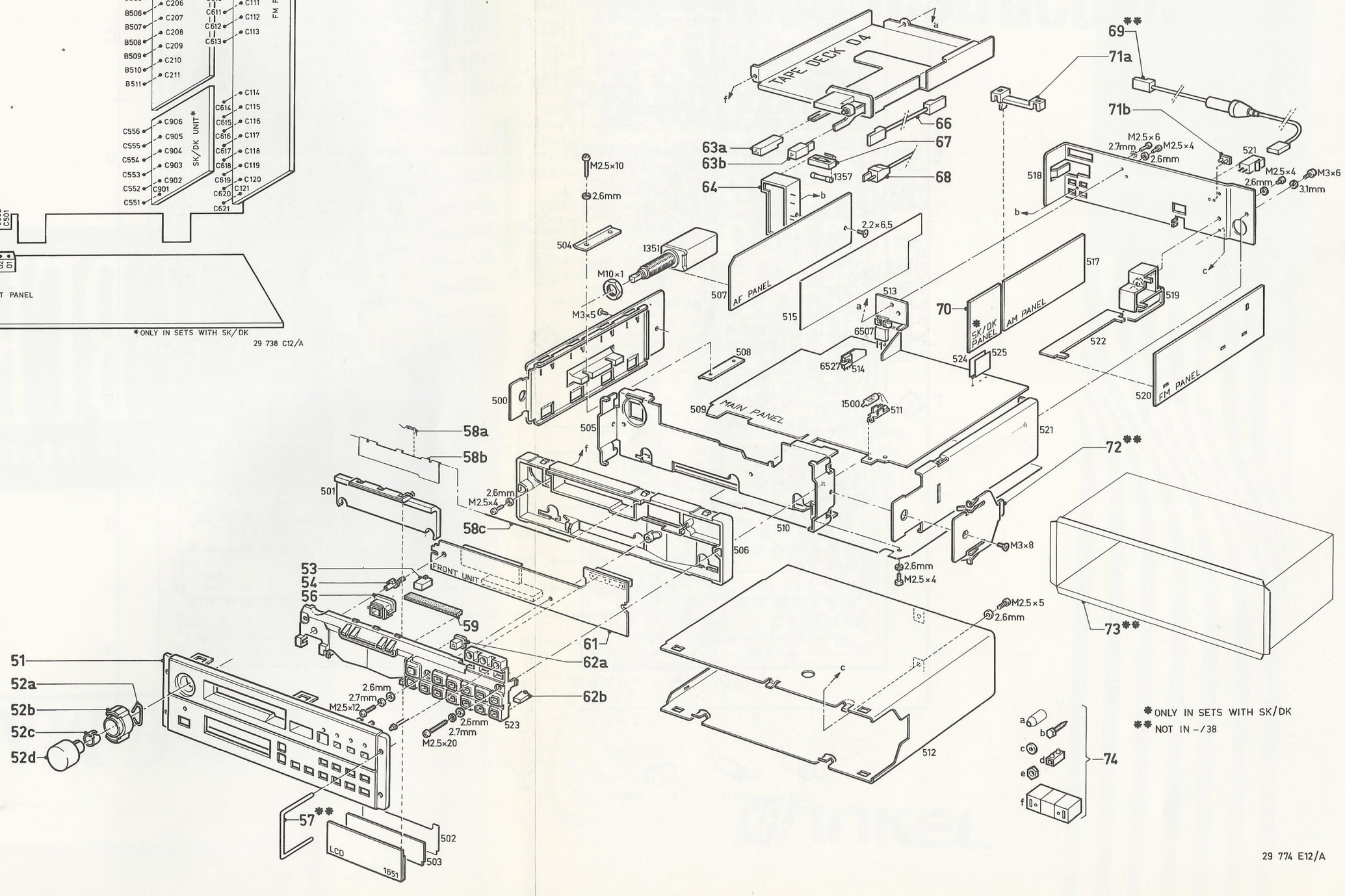

29 774 E12/A