# Cassette auto radio 22AC740

00/38/62/65

Service
Service
**Service**

For repair information of tape deck refer to Service Manual Auto Cassette Deck D9-1

# Service Manual

12 V

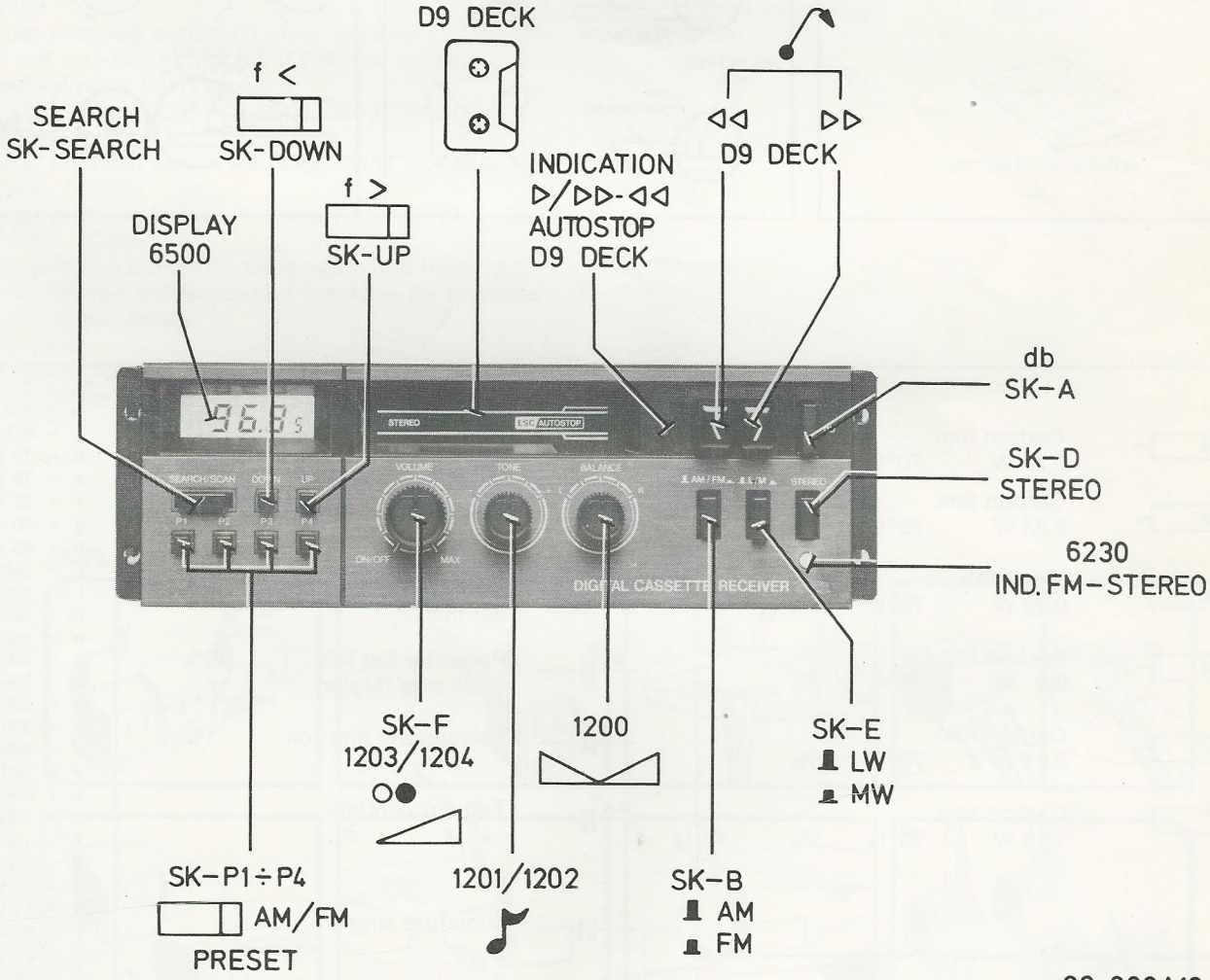


32 000A12

Documentation Technique Service Dokumentation Documentazione di Servizio Huolte-Ohje Manual de Servicio Manual de Serviçio

Subject to modification

GB 4822 725 15428

Printed in The Netherlands

PHILIPS

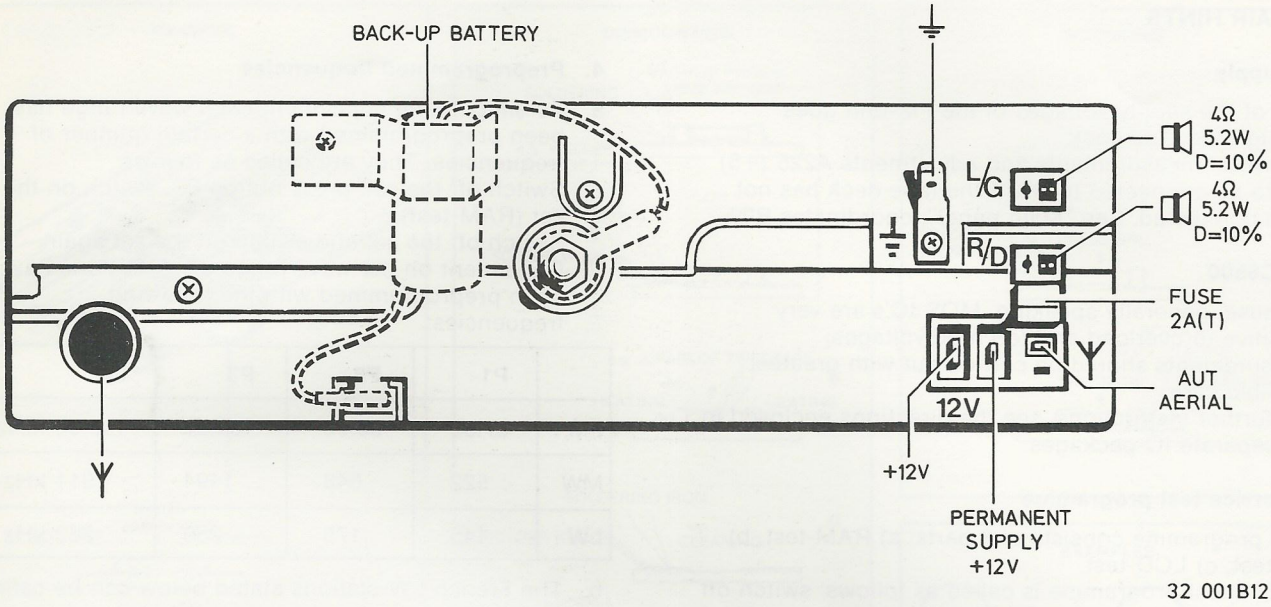


## TECHNICAL DATA

### General

| | |
|---|---|
| Power supply | : 14.4 V |
| Dimensions (w x h x d) | : 180 x 51 x 148 mm |

### Radio

| | |
|---|---|
| MW | : 522 - 1611 kHz |
| LW | : 145 - 262 kHz |
| IF-AM | : 468 kHz |
| FM | : 87.5 - 108 MHz |
| IF-FM | : 10.7 MHz |
| Sensitivity for 26 dB S/N | : ⩽ 5 μV (FM)<br>⩽ 180 μV (MW)<br>⩽ 180 μV (LW) |
| Limiting —3 dB | : 9.5 μV |
| 10 dB crosstalk | : 100 μV (stereo signal) |

### Cassette player

| | |
|---|---|
| Number of tracks | : 2x2 |
| Tape speed | : 4.76 cm/sec |
| Wow and flutter | : ⩽ 0.3% |
| Crosstalk | : ⩾ 30 dB |

### Amplifier

| | |
|---|---|
| Output | : 2x5.2 W ± 1 dB at 4 Ω |
| db | : 5 dB at 10 kHz |
| Bass | : ± 6 dB at 125 Hz |
| Treble | : ± 14 dB at 10 kHz |

## REPAIR HINTS

### 1. Supply

One of the supply voltages of the FM-unit goes through the tape deck.
In case of measurements and adjustments A225 (+5) has to be connected to +3, if the tape deck has not been connected. See "Main panel", coordinates B09.

### 2. μC6500

Because, generally speaking, MOS IC's are very sensitive to overload and too high voltages, measurements should be carried out with greatest possible care.
For further instructions, see the directions enclosed in the separate IC-packages.

### 3. Service test programme

This programme consists of 3 parts: a) RAM-test, b) I/O-test; c) LCD-test.

a. The test programme is called as follows: switch off the set, press button P3, switch on the set, while button P3 remains depressed.
Now the μC is testing the RAM. If there are no faults, the display will indicate "188.85", otherwise "INFO" will appear.

b. After the RAM-test the I/O test can be carried out by pressing button P3 1, 2 or 3 times for a short while.
After pressing button P3 once the level ("0" or "1") of the first-mentioned point (IN) will appear on the second point (OUT) too.
C511 · C504; C512 · C505; C513 · C506 + C509;
After pressing button P3 twice: C507 · C510; C506 · C509
After pressing button P3 three times: C510 · C507; C509 · C506

c. By pressing button P3 once again and holding it, the LCD test will be carried out. Now the sections light up per group.
*Remark:*
If button P3 is released, a quick LCD test will be carried out.

### 4. Preprogrammed frequencies

a. To simplify the adjustment each wave range has been preprogrammed with a certain number of frequencies. They are called as follows:
Switch off the set, press button P3, switch on the set (RAM-test).
Switch off the set and switch on the set again.
Dependent on the wave range the P-buttons have been preprogrammed with the following frequencies:

| | P1 | P2 | P3 | P4 |
|---|---|---|---|---|
| FM | 87.50 | 93.00 | 104.00 | 108.00 MHz |
| MW | 522 | 648 | 1494 | 1611 kHz |
| LW | 145 | 175 | 250 | 262 kHz |

b. The French LW-stations stated below can be called as follows:
Press the "search" button and switch on the set, while the "search" button remains depressed.

| | | |
|---|---|---|
| P1: | France Inter | 164 kHz |
| P2: | Europe | 185 kHz |
| P3: | Monte Carlo | 218 kHz |
| P4: | Luxemburg | 236 kHz |

**LS PLUGS**

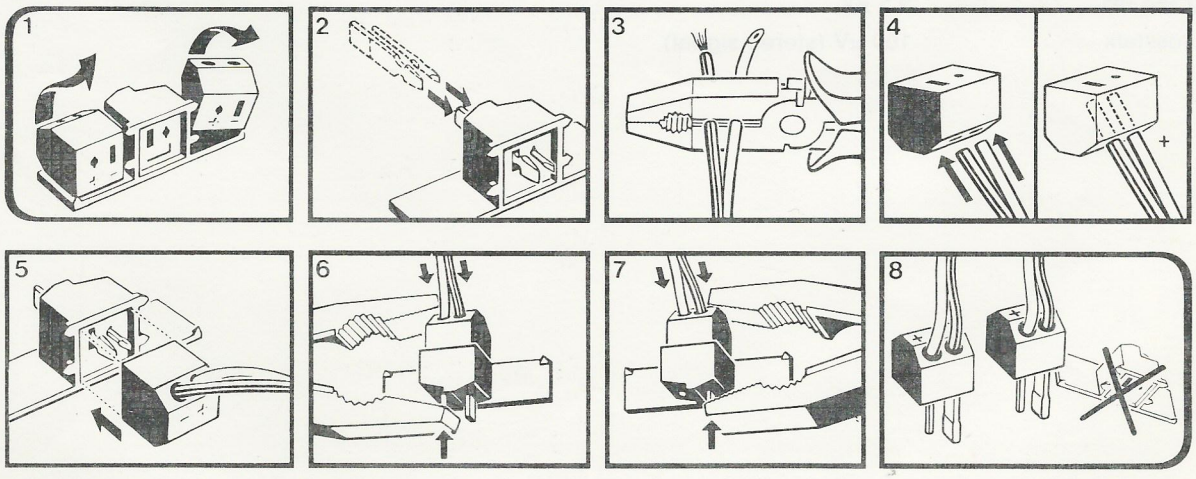


30 341A12

## CHIP MOUNTING

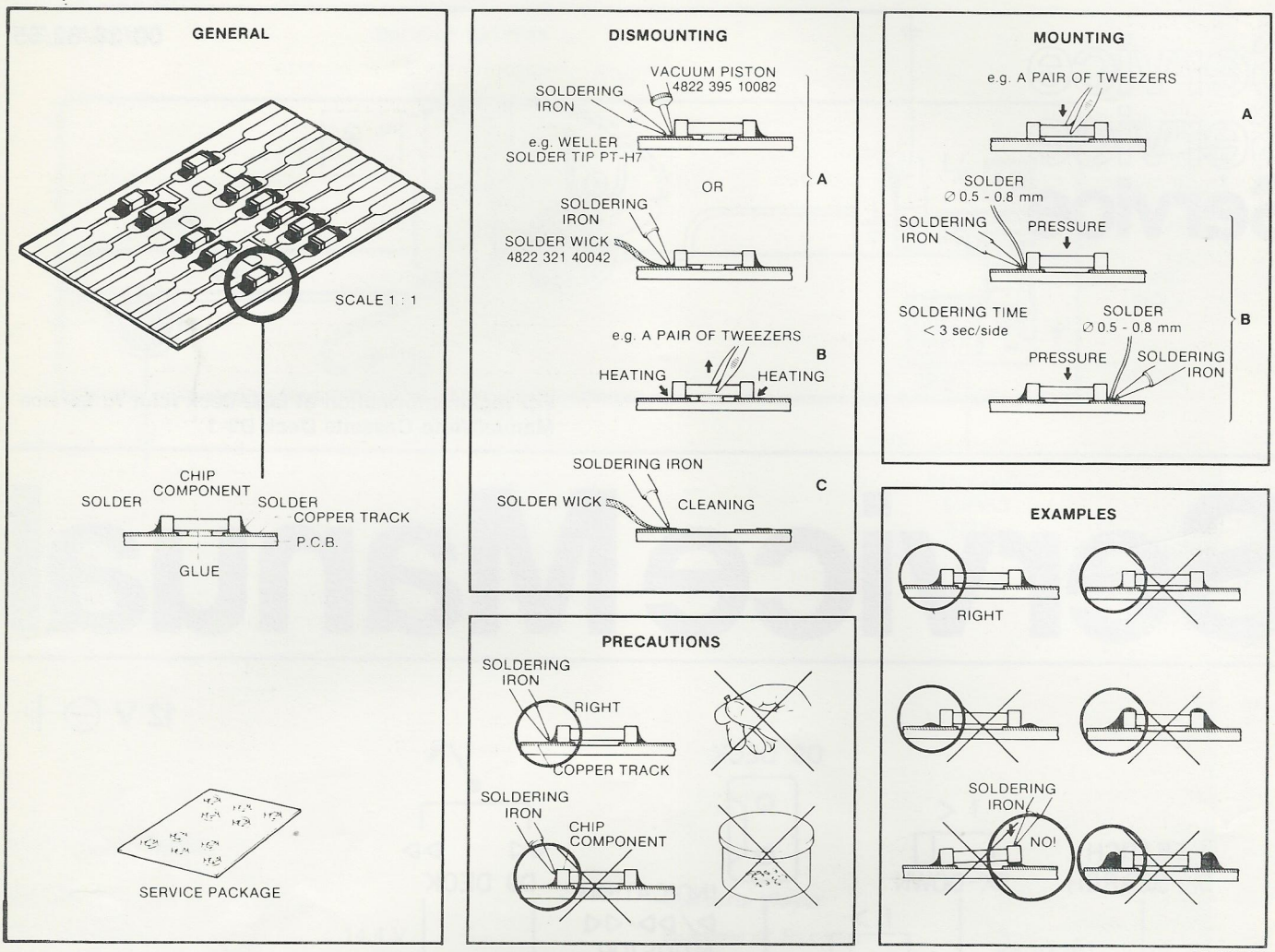


27 012C12

| | | | |
|---|---|---|---|
| ▲ | Carbon film 0.2 W | 70°C | 5% |
| □ | Carbon film 0.33 W | 70°C | 5% |
| ■ | Metal film 0.33 W | 70°C | 5% |
| ● | Carbon film 0.5 W | 70°C | 5% |
| ▨ | Carbon film 0.67 W | 70°C | 5% |
| ◪ | Carbon film 1.15 W | 70°C | 5% |

Ⓒ Chip component

| | | |
|---|---|---|
| ΔΔ* | Ceramic plate<br>Tuning ⩽ 120 pF NP.0<br>Others | <br>2%<br>−20/+80% |
| ●● * | Polyester flat foil | 10% |
| □ * | Metalized polyester flat film | 10% |
| ○□* | Polyester flat foil small size (Mylar) | 10% |
| ○Δ* | Polysterene film/foil | 1% |
| ■▲* | Tubular ceramic | |
| ○* | Miniature single | |
| ○○* | Subminiature tantalum | ± 20% |

| | | |
|---|---|---|
| *a | = | 2,5 V |
| b | = | 4 V |
| c | = | 6,3 V |
| d | = | 10 V |
| e | = | 16 V |
| f | = | 25 V |
| g | = | 40 V |
| h | = | 63 V |
| j | = | 100 V |
| l | = | 125 V |
| m | = | 150 V |
| n | = | 160 V |
| q | = | 200 V |
| r | = | 250 V |
| s | = | 300 V |
| t | = | 350 V |
| u | = | 400 V |
| v | = | 500 V |
| w | = | 630 V |
| x | = | 1000 V |
| A | = | 1,6 V |
| B | = | 6 V |
| C | = | 12 V |
| D | = | 15 V |
| E | = | 20 V |
| F | = | 35 V |
| G | = | 50 V |
| H | = | 75 V |
| I | = | 80 V |

27 037A/C

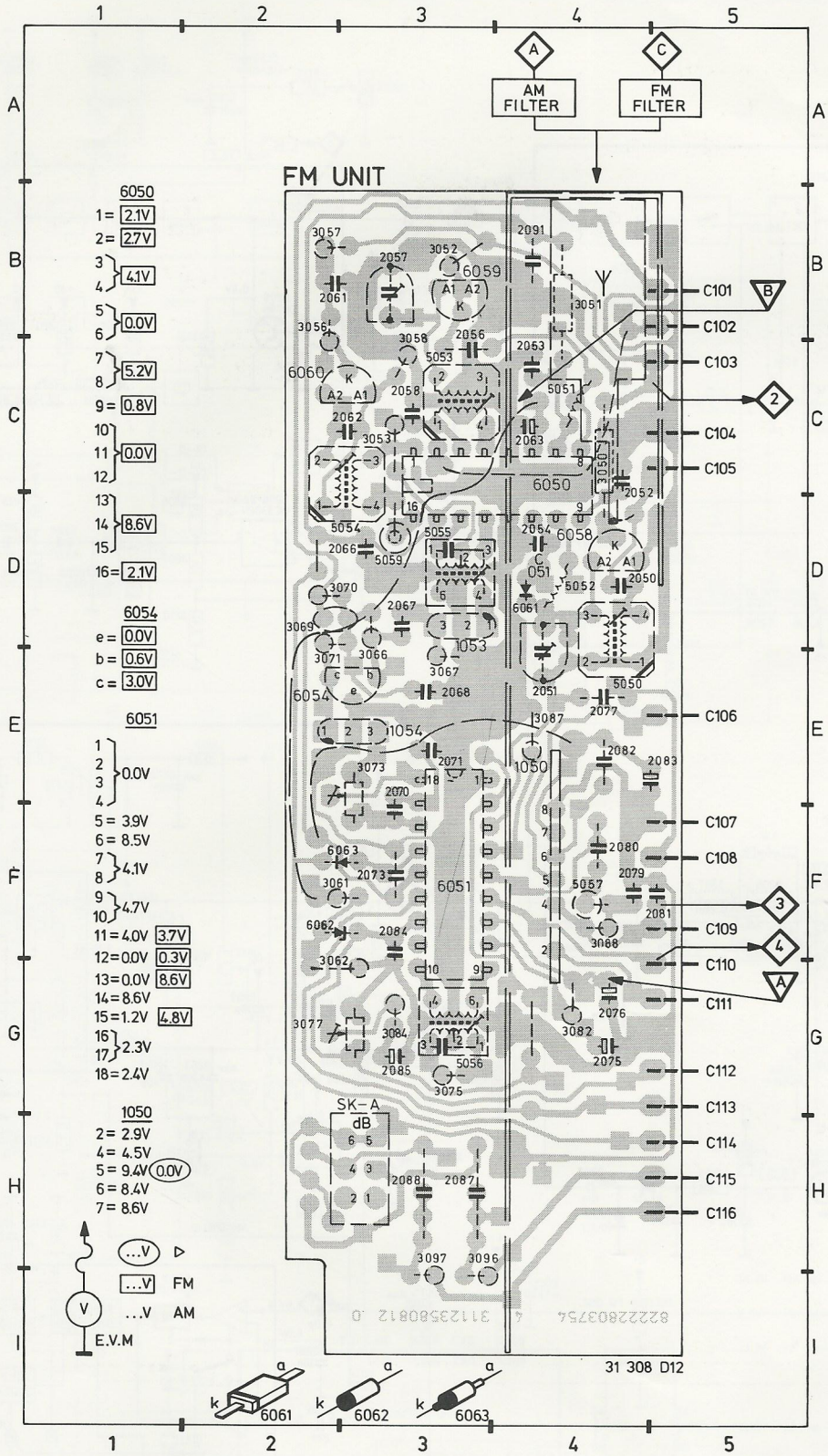


| ITEM | PCB |
|---|---|
| 1050 | E04 |
| 1053 | D03 |
| 1054 | E03 |
| 2050 | D04 |
| 2051 | E04 |
| 2052 | C04 |
| 2053 | C04 |
| 2054 | D04 |
| 2056 | B03 |
| 2057 | B03 |
| 2058 | C03 |
| 2061 | B02 |
| 2062 | C02 |
| 2063 | C04 |
| 2066 | D02 |
| 2067 | D03 |
| 2068 | E03 |
| 2070 | E03 |
| 2071 | E03 |
| 2073 | F03 |
| 2075 | G04 |
| 2076 | G04 |
| 2077 | E04 |
| 2079 | F04 |
| 2080 | F04 |
| 2081 | F04 |
| 2082 | E04 |
| 2083 | E04 |
| 2084 | F03 |
| 2085 | G03 |
| 2087 | H03 |
| 2088 | H03 |
| 2091 | B04 |
| 3050 | C04 |
| 3051 | B04 |
| 3052 | B03 |
| 3053 | C03 |
| 3056 | B02 |
| 3057 | B02 |
| 3058 | B03 |
| 3061 | F02 |
| 3062 | F02 |
| 3066 | E03 |
| 3067 | E03 |
| 3069 | D02 |
| 3070 | D02 |
| 3071 | E02 |
| 3073 | E03 |
| 3075 | G03 |
| 3077 | G02 |
| 3082 | G04 |
| 3084 | G03 |
| 3087 | E04 |
| 3088 | F04 |
| 3096 | H03 |
| 3097 | H03 |
| 5023 | C03 |
| 5050 | E04 |
| 5051 | C04 |
| 5052 | D04 |
| 5054 | D02 |
| 5055 | D03 |
| 5056 | G03 |
| 5057 | F04 |
| 5059 | D03 |
| 6050 | C04 |
| 6051 | F03 |
| 6054 | E02 |
| 6058 | D04 |
| 6059 | B03 |
| 6060 | C02 |
| 6061 | D04 |
| 6062 | F02 |
| 6063 | F02 |
| SK-A | G02 |

## ADJUSTMENT
### General

a. For generator signals, trimming conditions, explanation of table etc. see service information A83-312.

b. The P1...P4 stated in the column ▭ are preprogrammed frequencies. See repair hints.

| | SK | | | | | | |
|---|---|---|---|---|---|---|---|
| AM-IF | MW | 522 kHz<br>1000 Hz 30% AM | A | P1 | 5210 | 1 max.~ | |
| AM-RF | MW | 522 kHz<br>1000 Hz 30% AM | A | P1 | 5208 | 0.5 V | |
| | | 1611 kHz<br>1000 Hz 30% AM | | P4 | 2267 | 8.0 V | |
| | LW | 262 kHz | A | P4 | 2264 | 8.0 V | 2 |
| | | 145 kHz<br>1000 Hz 30% AM | | P1 | | Check<br>0.5 V | |
| | MW | 648 kHz<br>1000 Hz 30% AM | A | P2 | 5207 | 1 max.~ | |
| | | 1494 kHz<br>1000 Hz 30% AM | | P3 | 2253 | | |
| | LW | 175 kHz<br>1000 Hz 30% AM | A | P2 | 5206 | | |
| | | 250 kHz<br>1000 Hz 30% AM | | P3 | 2257 | | |
| AM Search | MW | 1494 kHz : 500 μV<br>unmodulated | A | P3 | 3284 | | 7 Fig. 1a |
| FM-IF | FM | 93 MHz wobbel<br>A ○ B ●<br>50 Hz Δf= 300 kHz | C | P2 | 5055 | | 1 3 MAX. |
| | | | | | 5056 | | 2 3 4 |
| | | | | | 5056 | | 3 3 4 |
| Osc. for PLL | FM | 100 MHz | C | ▭ | 5054 | 2 4.65 V⎓ | |
| FM-RF | FM | 87.5 MHz<br>1000 Hz<br>Δf= 22.5 kHz | C | P1 | 5050<br>5053 | 1 max.~ | |
| | | 100 MHz<br>1000 Hz<br>Δf= 22.5 kHz | | ▭ | 2051<br>2057 | | |
| α-3 dB | FM | 93 MHz<br>1000 Hz<br>Δf: 22.5 kHz — 3.5 μV | C | P2 | 3073 | 1a 4 0-3 dB | |
| | | 93 MHz<br>1000 Hz<br>Δf: 22.5 kHz — 9.5 μV | | | 3077 | 4 0-3 dB | |
| VCO stereo dec. | FM | No signal | | | 3220 | 6 76 ± 0.3 kHz | |
| SDS-10 dB cross-talk | FM | 93 MHz : 100 μV<br>stereo signal —R | C | P2 | 3211 | 1 L — 5 R=10 dB | |
| FM search | FM | 93 MHz : 100 μV<br>unmodulated | C | P2 | 3280 | | 7 Fig. 1b |

↕ Repeat

1 a. Connect 2 and 8 of 6051 via a resistor of 220 Ω.
b. Enlarge 2080 up to 1 μF
c. Connect 1 and 3 of 5056.

2 Remove the short-circuit 1-3 of 5056
Adjust for maximum symmetrical S-curve, see Fig. 2.

3 Adjust for maximum symmetrical stop pulse, see Fig. 2.

**26 dB-S/N ratio**

| SK | | | Level |
|---|---|---|---|
| FM | 93 MHz | C | ≤ 5 μV |
| MW | 648 kHz | A | ≤ 180 μV |
| | 1494 kHz | | ≤ 180 μV |
| LW | 175 kHz | A | ≤ 180 μV |
| | 250 kHz | | ≤ 180 μV |

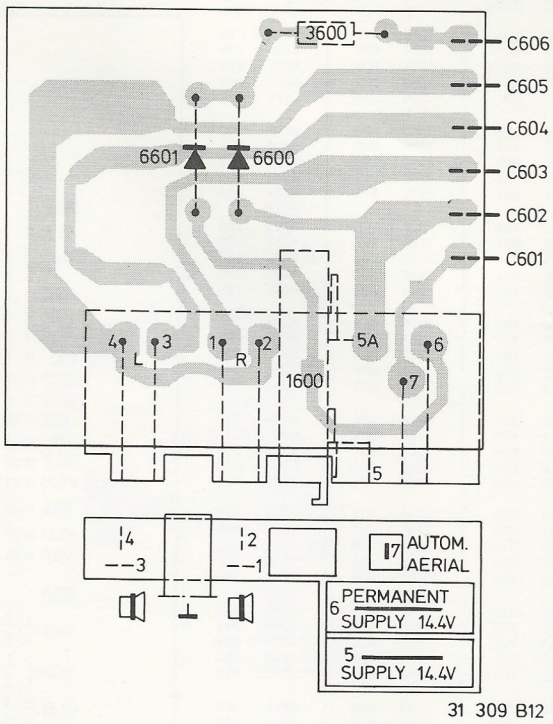


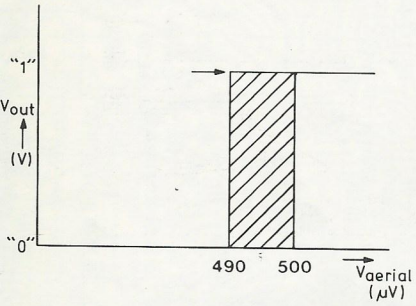


Fig. 1a 32420A10

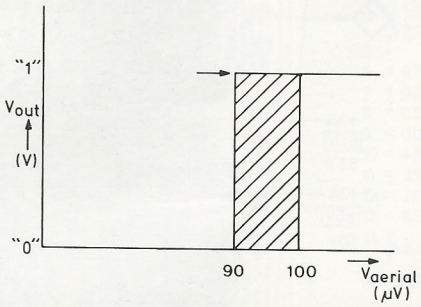


Fig. 1b 32420A10

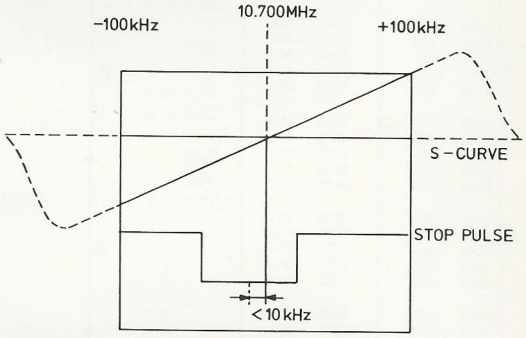


Fig. 2 32421A10

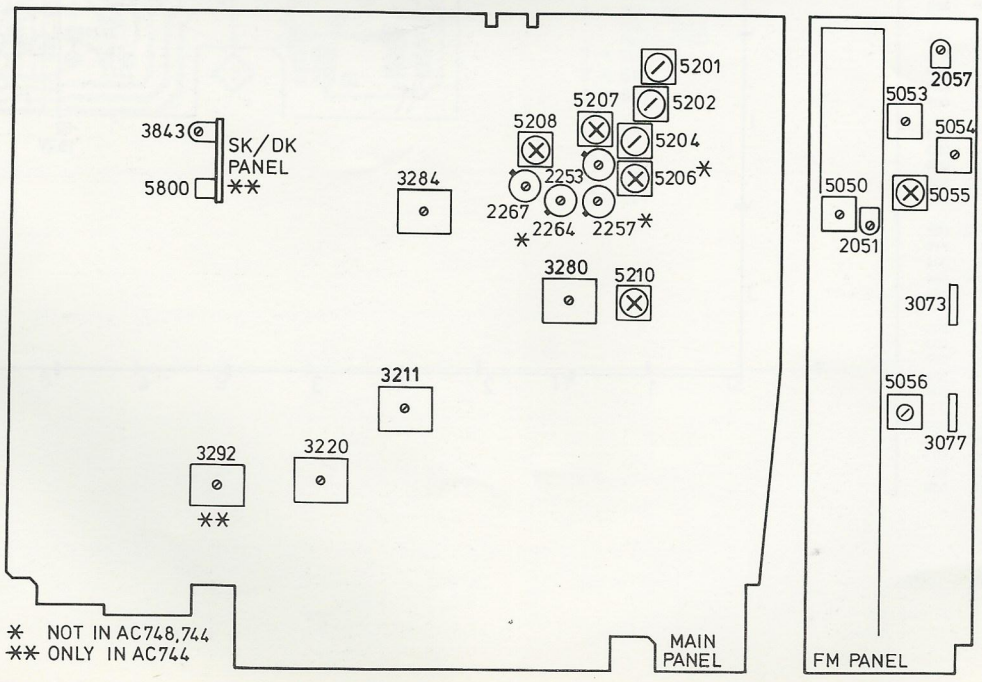


32 349 B11/A

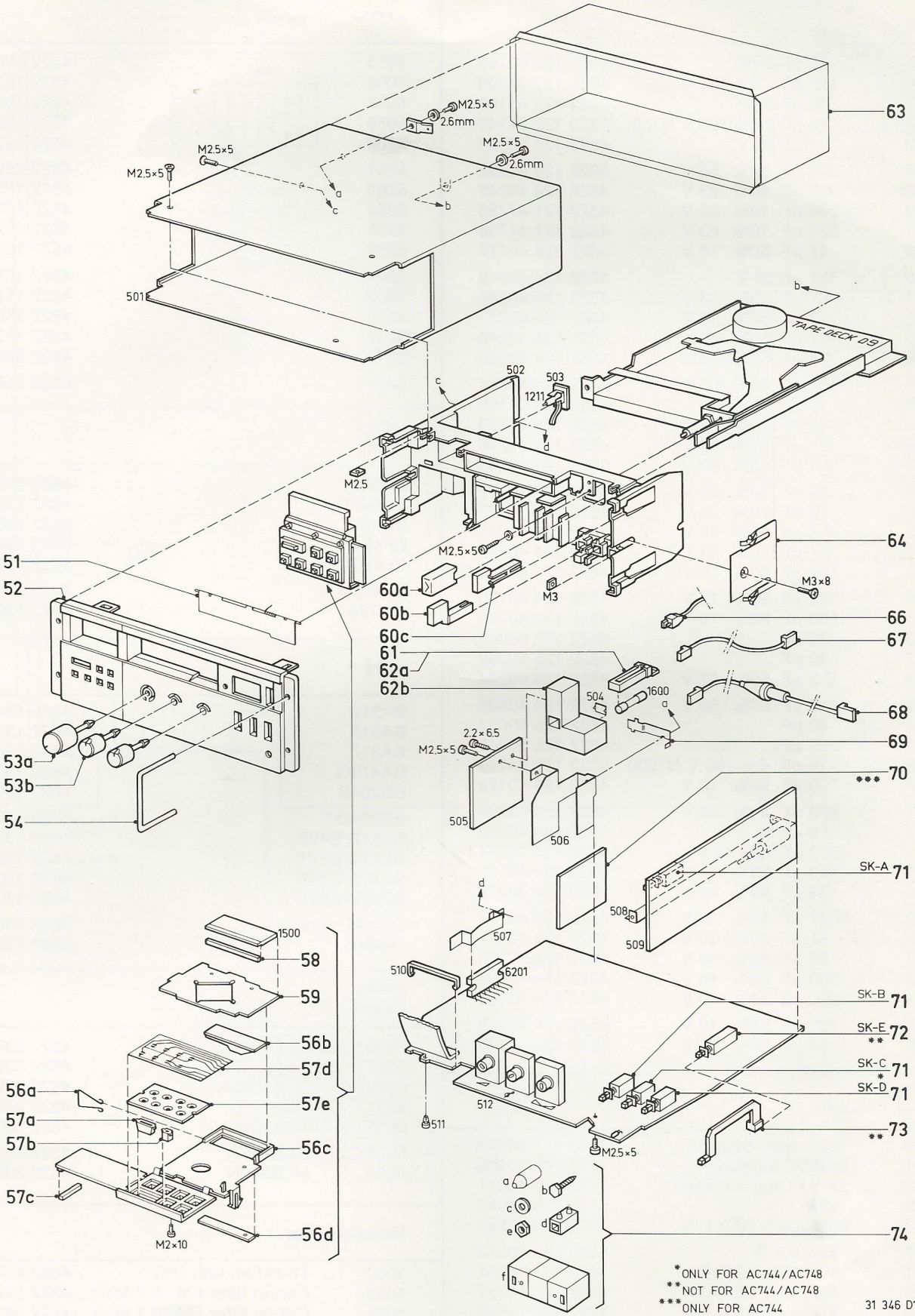


| | | | | | |
|---|---|---|---|---|---|
| 51 | 4822 443 61089 | 60 | 4822 410 22978 | 71 | 4822 276 11069 |
| 52 (AC740) | 4822 454 11092 | 61 | 4822 256 30168 | 72 | 4822 276 11084 |
| 52 (AC744) | 4822 454 11091 | 62 | 4822 267 40393 | 73 | 4822 404 10603 |
| 52 (AC748) | 4822 454 11104 | 63 | 4822 443 30463 | 74 | 4822 310 10079 |
| 53 | 4822 413 31152 | 64 | 4822 492 62873 | | |
| 54 | 4822 404 20437 | 66 | 4822 267 40415 | | |
| 56 | 4822 256 90488 | 67 | 4822 321 20347 | | |
| 57 | 4822 310 20309 | 68 | 4822 321 20448 | | |
| 58 | 4822 460 20466 | 69 | 4822 492 62874 | | |
| 59 | 4822 214 50321 | 70 | 4822 214 50319 | | |

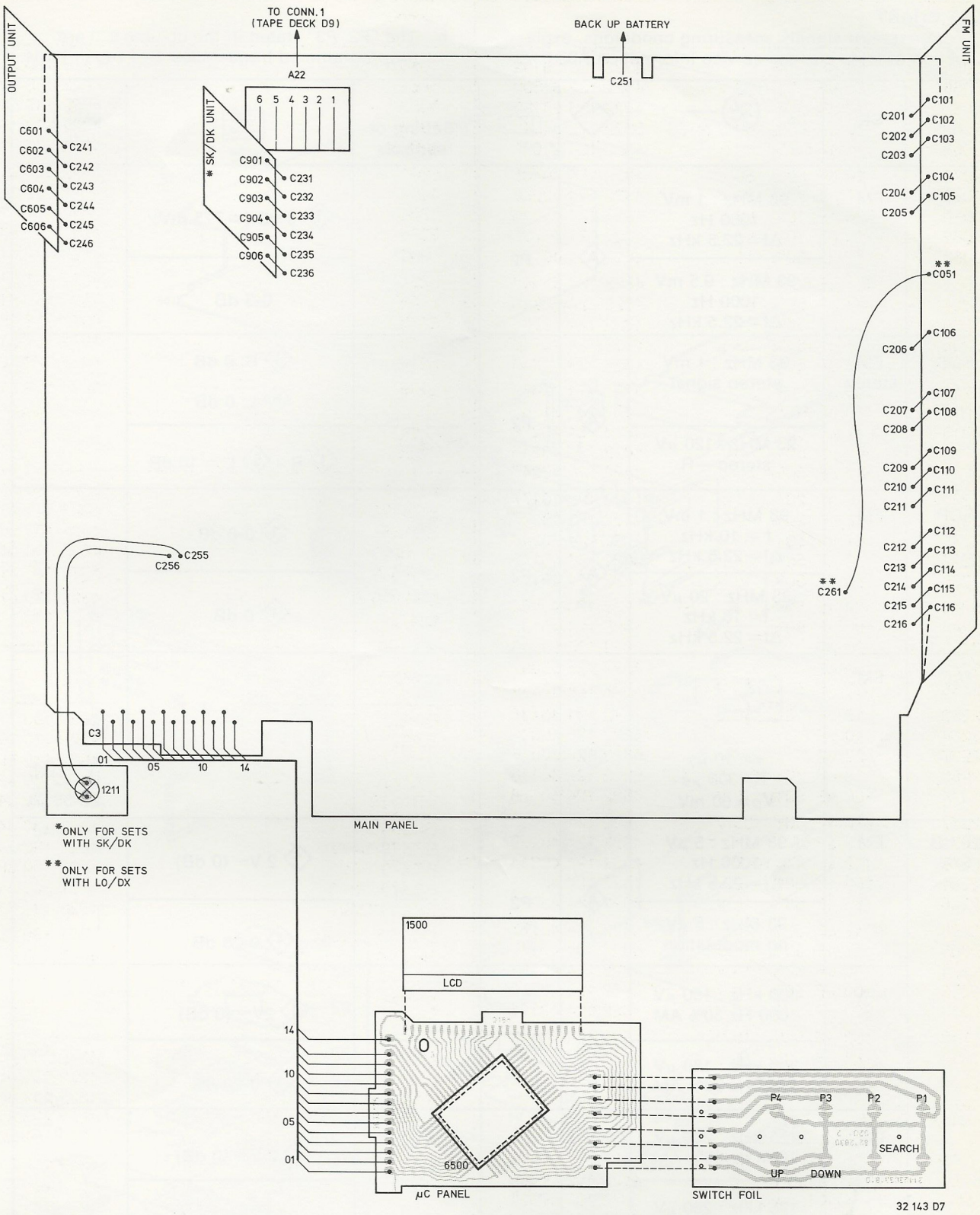
TO CONN.1
(TAPE DECK D9)
A22
BACK UP BATTERY
C251
OUTPUT UNIT
FM UNIT
* SK/DK UNIT
6 5 4 3 2 1
C601
C602
C603
C604
C605
C606
C241
C242
C243
C244
C245
C246
C901
C902
C903
C904
C905
C906
C231
C232
C233
C234
C235
C236
C101
C201
C102
C202
C103
C203
C104
C204
C105
C205
**
C051
C106
C206
C107
C207
C108
C208
C109
C209
C110
C210
C111
C211
C112
C212
C113
C213
C114
C214
C115
C215
C116
C216
**
C261
C255
C256
C3
01
05
10
14
1211
*ONLY FOR SETS
WITH SK/DK
**ONLY FOR SETS
WITH LO/DX
MAIN PANEL
1500
LCD
14
10
05
01
6500
µC PANEL
P4
P3
P2
P1
SEARCH
UP
DOWN
SWITCH FOIL
32 143 D7

| | | |
|---|---|---|
| 2051 | 10 pF-3 pF | 4822 125 50199 |
| 2056 | 150 pF 2% 100 V | 4822 122 31308 |
| 2057 | 10 pF-3 pF | 4822 125 50199 |
| 2062 | 10 pF 2.5% 100 V N750 | 5322 122 34143 |
| 2063 | 1µF 50 V | 4822 124 20927 |
| 2075 | 10 µF 50% 50 V | 4822 124 40435 |
| 2076 | 4.7 µF 50% 63 V | 4822 124 40246 |
| 2080 | 220 nF 10% 63 V | 4822 121 41736 |
| 2082 | 220 nF 10% 63 V | 4822 121 41736 |
| 2083 | 47 µF 50% 10 V | 4822 124 40177 |
| 2085 | 0.1 µF 50 V | 4822 124 40348 |
| 2201 | 4.7 µF 50% 63 V | 4822 124 40246 |
| 2205 | 33 µF 50% 16 V | 4822 124 40272 |
| 2206 | 4.7 µF 50% 63 V | 4822 124 40246 |
| 2208 | 4.7 µF 50% 63 V | 4822 124 40246 |
| 2211 | 150 µF 20% 6.3 V | 4822 124 40684 |
| 2214 | 10 µF 16 V | 4822 124 21108 |
| 2215 | 0.47 µF 50% 63 V | 4822 124 40239 |
| 2220 | 4.7 µF 50% 63 V | 4822 124 40246 |
| 2221 | 4.7 µF 50% 63 V | 4822 124 40246 |
| 2226 | 10 nF 20% 25 V | 4822 122 10177 |
| 2227 | 10 nF 20% 25 V | 4822 122 10177 |
| 2236 | 4.7 µF 50% 63 V | 4822 124 40246 |
| 2237 | 4.7 µF 50% 63 V | 4822 124 40246 |
| 2238 | 100 µF 50% 10 V | 4822 124 40178 |
| 2244 | 1500 µF 50% 10 V | 4822 124 40185 |
| 2245 | 1500 µF 50% 10 V | 4822 124 40185 |
| 2253 | 20 pF | 4822 125 50045 |
| 2257 | 40 pF | 4822 125 50092 |
| 2258 | 2.2 µF 50% 63 V | 4822 124 40244 |
| 2259 | 10 µF 50% 50 V | 4822 124 40435 |
| 2264 | 40 pF | 4822 125 50092 |
| 2267 | 20 pF | 4822 125 50045 |
| 2269 | 18 pF 2% 100 V N1500 | 5322 122 34146 |
| 2274 | 100 µF 50% 10 V | 4822 124 40178 |
| 2277 | 470 nF 50% 63 V | 4822 124 40239 |
| 2278 | 2.2 µF 50 V | 4822 124 40459 |
| 2279 | 2.2 µF 50% 63 V | 4822 124 40244 |
| 2291 | 150 µF 50% 16 V | 4822 124 40195 |
| 2296 | 33 µF 50% 16 V | 4822 124 40272 |
| 2298 | 47 µF 50% 10 V | 4822 124 40177 |
| 2305 | 47 µF 50% 10 V | 4822 124 40177 |
| 2311 | 68 µF 50% 16 V | 4822 124 40193 |
| 2313 | 1500 µF 50% 16 V | 4822 124 40202 |
| 2314 | 220 µF 50% 10 V | 4822 124 40181 |
| 2318 | 100 µF 50% 10 V | 4822 124 40178 |
| 2319 | 68 µF 50% 16 V | 4822 124 40193 |

| | | |
|---|---|---|
| 1200 | 100K spec balance | 4822 101 30492 |
| 1201 | 2x100K log tone | 4822 102 30406 |
| 1203 | 2x 47K log volume | 4822 102 40071 |
| 3069 | 22K | 5322 116 34047 |
| 3073 | 330E carb lin 0,1 W | 4822 100 10581 |
| 3077 | 22K 0,1 W | 4822 100 10513 |
| 3211 | 10K 10% ECP10 | 4822 101 10351 |
| 3220 | 10K 10% ECP10 | 4822 101 10351 |
| 3280 | 47K carb lin 0,1 W | 4822 100 10582 |
| 3284 | 22K carb lin 0,1 W | 4822 100 10585 |

| | |
|---|---|
| 5050 | 4822 156 10666 |
| 5051 | 4822 157 51504 |
| 5052 | 4822 157 51504 |
| 5053 | 4822 156 10664 |
| 5054 | 4822 157 50896 |

| | |
|---|---|
| 5055 | 4822 156 21167 |
| 5056 | 4822 153 50108 |
| 5057 | 4822 157 50975 |
| 5059 | 4822 526 10025 |
| 5200 | 4822 157 51216 |
| 5201 | 4822 157 51509 |
| 5202 | 4822 157 51391 |
| 5204 | 4822 157 51508 |
| 5205 | 4822 157 50963 |
| 5206 | 4822 157 51507 |
| 5207 | 4822 157 51505 |
| 5208 | 4822 157 51506 |
| 5210 | 4822 156 10663 |
| 5212 | 4822 157 51503 |
| 5214 | 4822 526 10016 |
| 5215 | 4822 156 21109 |

| | |
|---|---|
| BC548 | 4822 130 40938 |
| BC549C | 4822 130 44246 |
| BD135 | 4822 130 40823 |
| BF494 | 4822 130 44195 |
| BF410A | 5322 130 44905 |
| BF410D | 4822 130 41697 |
| ON796 | 4822 130 41845 |

| | |
|---|---|
| BA212 | 4822 130 31129 |
| BA315 | 4822 130 30843 |
| BA317 | 4822 130 30847 |
| BA479G | 4822 130 42033 |
| BB204B | 4822 130 34449 |
| BB204G | 5322 130 34825 |
| BZX79/B4V7 | 4822 130 34174 |
| BZX79/B9V1 | 4822 130 30862 |
| BZX79/C3V0 | 4822 130 31251 |
| BZX79/C5V6 | 4822 130 34173 |
| CQY95 green | 4822 130 30923 |
| 1N4001 | 4822 130 31438 |

| | | |
|---|---|---|
| 6050 | TDA1062-S | 4822 209 81337 |
| 6051 | TDA4200-2 | 4822 209 81546 |
| 6200 | TDA1005A | 4822 209 80514 |
| 6201 | TDA1510 | 4822 209 81317 |
| 6202 | TDA1072 | 4822 209 80754 |
| 6203 | SAA1057 | 4822 209 81002 |
| 6204 | MC3302N | 4822 209 80634 |

**Miscellaneous**

| | | |
|---|---|---|
| 1050 | Thickfilm unit IAC | 4822 214 50305 |
| 1053 | Ceram filter FM 10.7 MHz | 4822 242 70665 |
| 1054 | Ceram filter FM 10.7 MHz | 4822 242 70665 |
| 1207 | Ceram filter AM 468 kHz | 4822 242 70611 |
| 1209 | Crystal 4 MHz | 4822 242 70345 |
| 1210 | Crystal 4 MHz | 4822 242 70345 |
| 1211 | Lamp 50 mA-18 V | 4822 134 40504 |
| 1500 | LCD | 4822 130 90129 |
| 1600 | Fuse 2A (T) | 4822 253 30025 |

**TEST CHART**

a. For generator signals, measuring conditions, explanation of table etc. see service information A83-312.

b. The "P2, P3" stated in the column ▭ are preprogrammed frequencies. See repair hints.

| | SK | | ◇ | ▭ | Setting of controls | | |
|---|---|---|---|---|---|---|---|
| α— 3 dB | FM | 93 MHz : 1 mV<br>1000 Hz<br>Δf= 22.5 kHz | A | P2 | ◢ | 1 0 dB (≡ 775 mV) | |
| | | 93 MHz : 9.5 mV<br>1000 Hz<br>Δf= 22.5 kHz | | | | 0-3 dB | |
| SDS | FM stereo | 93 MHz : 1 mV<br>stereo signal | A | P2 | ◢ + ◣◢ | 1 R: 0 dB<br>5 L: 0 dB | |
| | | 93 MHz : 120 μV<br>stereo —R | | | | 1 R - 5 L = 10 dB | |
| SDR | FM | 93 MHz : 1 mV<br>f = 10 kHz<br>Δf= 22.5 kHz | A | P2 | ◢ | 1 0-8 dB | |
| | | 93 MHz : 20 μV<br>f= 10 kHz<br>Δf= 22.5 kHz | | | | 1 0 dB | |
| IAC | FM | τ Vp T<br>τ= 10 μs<br>T= 300 μs<br>Vp= 60 mV | B | | | | 8<br>20-35 μs |
| 26 dB S/N | FM | 93 MHz : 5 μV<br>1000 Hz<br>Δf= 22.5 kHz | A | P2 | ◢ | 1 2 V~ (0 dB) | |
| | | 93 MHz : 5 μV<br>no modulation | | | | 1 0-26 dB | |
| | MW | 600 kHz : 180 μV<br>1000 Hz 30% AM | C | ▭ | ◢ | 1 2V~ (0 dB) | |
| | | 600 kHz : 180 μV<br>1000 Hz 30% AM | | | | 1 0-26 dB | |
| | LW | 175 kHz : 200 μV<br>1000 Hz 30% AM | C | P2 | ◢ | 1 2 V~ (0 dB) | |
| | | 175 kHz : 200 μV<br>1000 Hz 30% AM | | | | 1 0-26 dB | |
| Cross-talk | FM | 93 MHz : 1 mV<br>stereo signal | A | P2 | ◢ + ◣◢ | 1 R: 0 dB<br>5 L: 0 dB | |
| | | 93 MHz : 1 mV<br>stereo —R | | | | 1 R — 5 L= 20 dB | |
| Aerial sensitivity | MW | 1494 kHz : 22 μV<br>1000 Hz 30% AM | C | P3 | ◢ max. | 1 2 V~ (≡ 1 W) | |
| | LW | 250 kHz : 32 μV<br>1000 Hz 30% AM | C | P3 | ◢ max. | 1 2 V~ (≡ 1 W) | |

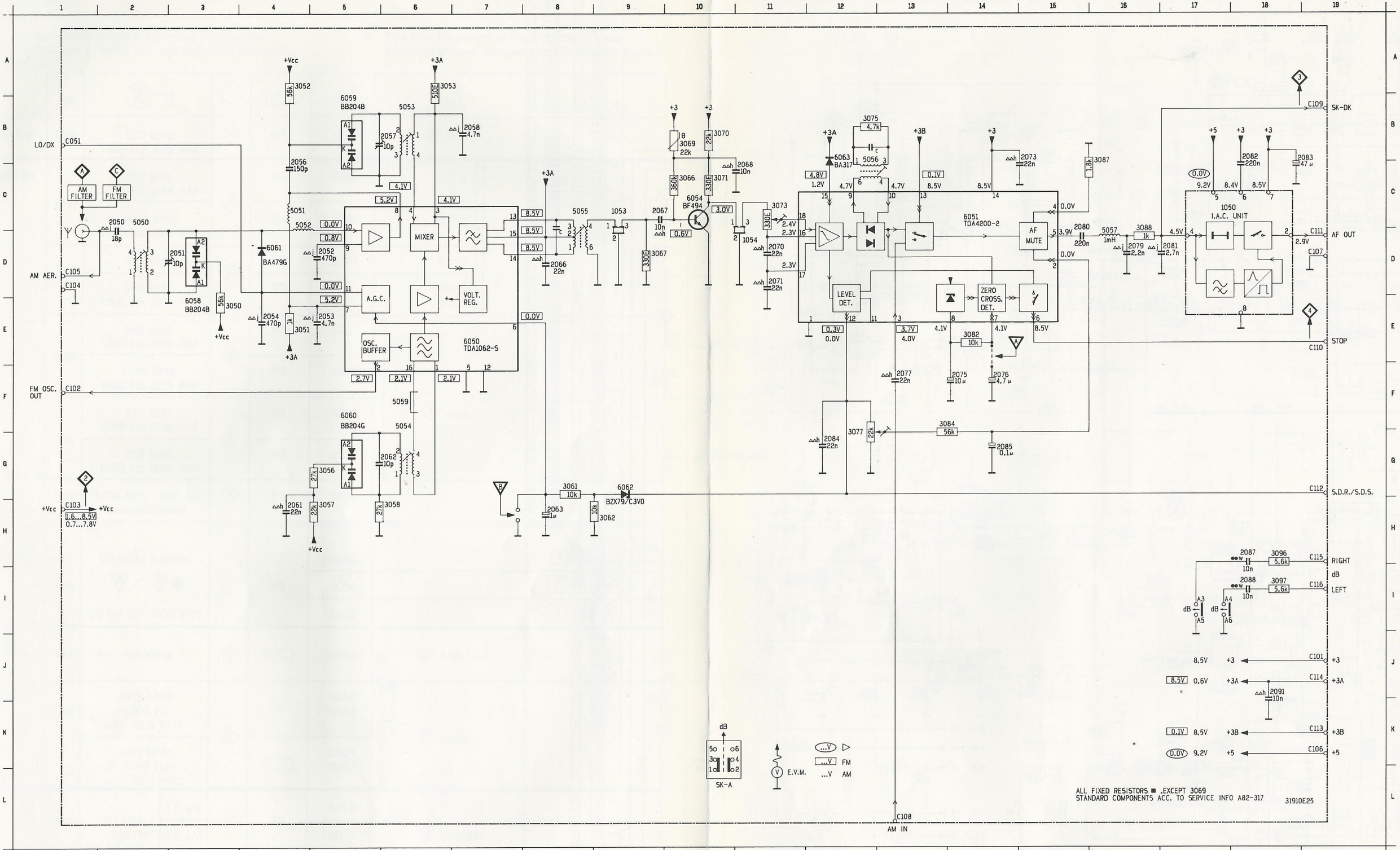
LO/DX
C051
AM FILTER
FM FILTER
AM AER.
C105
C104
FM OSC. OUT
C102
C103
+Vcc
1.6...8.5V
0.7...7.8V
2050 18p
5050
2051 10p
6058 BB204B
3050 56k
6061 BA479G
2054 470p
3051 1k
2053 4.7n
+3A
3052 56k
2056 150p
5051
5052
2052 470p
6059 BB204B
2057 10p
5053
3053 510E
2058 4.7n
MIXER
A.G.C.
VOLT. REG.
OSC. BUFFER
6050 TDA1062-S
5059
6060 BB204G
5054
2062 10p
3056 27k
2061 22n
3057 22k
3058 27k
5055
2066 22n
1053
3067 330E
2067 10n
3069 22k
3066 360k
6054 BF494
0.6V
3070 22k
3071 330E
2068 10n
1054
2070 22n
2071 22n
3073 330E
3061 10k
6062 BZX79/C3V0
2063 1µ
3062 10k
3075 4.7k
5056
6063 BA317
6051 TDA4200-2
LEVEL DET.
ZERO CROSS. DET.
AF MUTE
3087 1.8k
2073 22n
3082 10k
2075 10µ
2076 4.7µ
2077 22n
2084 22n
3077 22k
3084 56k
2085 0.1µ
2080 220n
5057 1mH
3088 1k
2079 2.2n
2081 2.7n
1050 I.A.C. UNIT
2082 220n
2083 47µ
C109 SK-DK
C111 AF OUT
C107
C110 STOP
C112 S.D.R./S.D.S.
2087 10n
3096 5.6k
C115 RIGHT
2088 10n
3097 5.6k
C116 LEFT
dB
C101 +3
C114 +3A
2091 10n
C113 +3B
C106 +5
SK-A
E.V.M.
FM
AM
C108 AM IN
ALL FIXED RESISTORS ■ ,EXCEPT 3069
STANDARD COMPONENTS ACC. TO SERVICE INFO A82-317
31910E25

| | | |

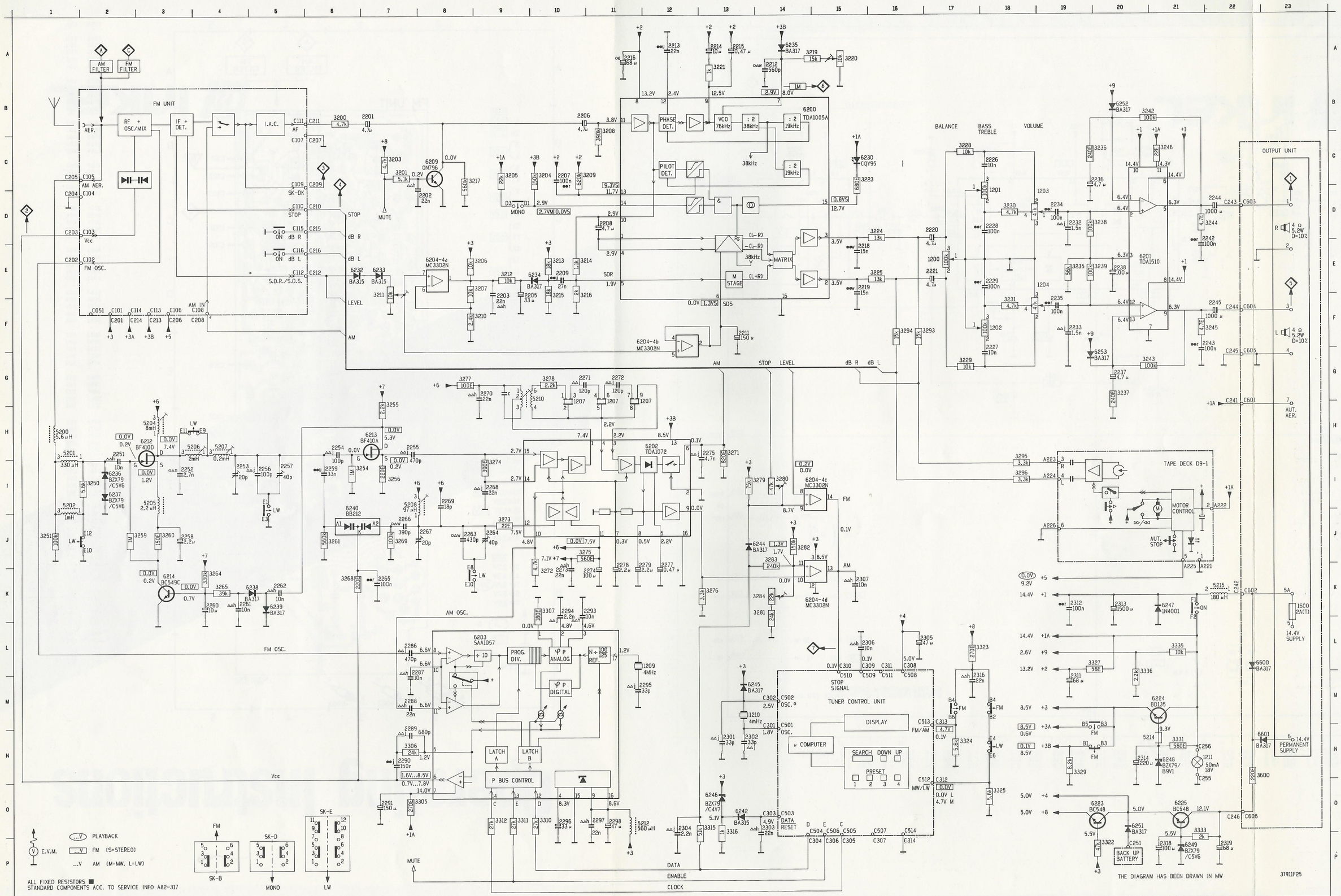


| | | | |
|---|---|---|---|
| 1200 | E17 | 3275 | J10 |
| 1201 | D18 | 3276 | K13 |
| 1202 | F18 | 3277 | G 8 |
| 1203 | D19 | 3278 | G10 |
| 1204 | E19 | 3279 | I14 |
| 1207 | G10 | 3280 | I14 |
| 1207 | G11 | 3281 | K14 |
| 1207 | G12 | 3282 | J14 |
| 1209 | L12 | 3283 | J14 |
| 1210 | M14 | 3284 | K14 |
| 1211 | N22 | 3293 | F17 |
| 1600 | K23 | 3294 | F16 |
| 2201 | B 7 | 3295 | I18 |
| 2202 | D 8 | 3296 | I18 |
| 2203 | E 9 | 3305 | O 8 |
| 2205 | E10 | 3306 | N 7 |
| 2206 | B10 | 3307 | K10 |
| 2207 | C10 | 3310 | O10 |
| 2208 | D11 | 3311 | O 9 |
| 2209 | E10 | 3312 | O 9 |
| 2211 | F13 | 3315 | O13 |
| 2212 | A14 | 3316 | O13 |
| 2213 | A12 | 3322 | P20 |
| 2214 | A13 | 3323 | L18 |
| 2215 | A13 | 3324 | N17 |
| 2216 | A11 | 3325 | O18 |
| 2218 | E15 | 3327 | L20 |
| 2219 | E15 | 3329 | N19 |
| 2220 | D17 | 3331 | N21 |
| 2221 | E17 | 3333 | O21 |
| 2226 | C18 | 3335 | L21 |
| 2227 | F18 | 3336 | M20 |
| 2228 | D18 | 3600 | N23 |
| 2229 | E18 | 5200 | H 1 |
| 2232 | D19 | 5201 | H 1 |
| 2233 | F19 | 5202 | I 1 |
| 2234 | D19 | 5204 | H 3 |
| 2235 | F19 | 5205 | I 3 |
| 2236 | C20 | 5206 | H 4 |
| 2237 | G20 | 5207 | H 4 |
| 2238 | E20 | 5208 | I 7 |
| 2242 | D22 | 5210 | G10 |
| 2243 | F22 | 5212 | O11 |
| 2244 | D22 | 5214 | N20 |
| 2245 | F22 | 5215 | K22 |
| 2251 | H 2 | 6200 | B14 |
| 2252 | I 3 | 6201 | E20 |
| 2253 | I 4 | 6202 | H12 |
| 2254 | H 6 | 6203 | L 9 |
| 2255 | H 7 | 6209 | C 8 |
| 2256 | I 5 | 6212 | H 3 |
| 2257 | I 5 | 6213 | H 7 |
| 2258 | J 3 | 6214 | K 3 |
| 2259 | G 6 | 6223 | O20 |
| 2260 | K 4 | 6224 | M21 |
| 2261 | K 4 | 6225 | O21 |
| 2262 | K 5 | 6230 | C16 |
| 2263 | J 8 | 6232 | E 6 |
| 2264 | J 9 | 6233 | E 7 |
| 2265 | K 7 | 6234 | E10 |
| 2266 | J 7 | 6235 | A14 |
| 2267 | J 8 | 6236 | I 2 |
| 2268 | I 9 | 6237 | I 2 |
| 2269 | I 8 | 6238 | K 5 |
| 2270 | G 9 | 6239 | K 5 |
| 2271 | G10 | 6240 | I 6 |
| 2272 | G11 | 6242 | O13 |
| 2273 | K10 | 6244 | J14 |
| 2274 | K11 | 6245 | M13 |
| 2275 | H13 | 6246 | O13 |
| 2277 | J12 | 6247 | K21 |
| 2278 | J11 | 6248 | N21 |
| 2279 | J12 | 6249 | P21 |
| 2286 | L 7 | 6251 | O20 |
| 2287 | L 8 | 6252 | B20 |
| 2288 | M 7 | 6253 | O20 |
| 2289 | M 7 | 6600 | L23 |
| 2290 | N 7 | 6601 | N23 |
| 2291 | O 7 | | |
| 2293 | K11 | | |
| 2294 | K10 | | |
| 2295 | M12 | | |
| 2296 | O10 | | |
| 2297 | O11 | | |
| 2298 | O11 | | |
| 2301 | N13 | | |
| 2302 | N13 | | |
| 2303 | O14 | | |
| 2304 | O12 | | |
| 2305 | L17 | | |
| 2306 | L16 | | |
| 2307 | K15 | | |
| 2311 | M19 | | |
| 2312 | K19 | | |
| 2313 | K20 | | |
| 2314 | N20 | | |
| 2316 | M17 | | |
| 2318 | P21 | | |
| 2319 | P22 | | |
| 3200 | B 6 | | |
| 3201 | C 7 | | |
| 3203 | C 7 | | |
| 3204 | C10 | | |
| 3205 | C 9 | | |
| 3206 | E 9 | | |
| 3207 | E 9 | | |
| 3208 | B11 | | |
| 3209 | C11 | | |
| 3210 | F 9 | | |
| 3211 | E 7 | | |
| 3212 | E 9 | | |
| 3213 | E10 | | |
| 3214 | E11 | | |
| 3215 | E10 | | |
| 3216 | E11 | | |
| 3217 | C 9 | | |
| 3219 | A15 | | |
| 3220 | A15 | | |
| 3221 | A13 | | |
| 3223 | C16 | | |
| 3224 | D16 | | |
| 3225 | E16 | | |
| 3228 | C17 | | |
| 3229 | G17 | | |
| 3230 | D18 | | |
| 3231 | F18 | | |
| 3235 | E19 | | |
| 3236 | C20 | | |
| 3237 | D20 | | |
| 3238 | D20 | | |
| 3239 | E20 | | |
| 3242 | B20 | | |
| 3243 | D20 | | |
| 3244 | D22 | | |
| 3245 | F22 | | |
| 3246 | C21 | | |
| 3250 | I 2 | | |
| 3251 | J 1 | | |
| 3254 | I 7 | | |
| 3255 | G 7 | | |
| 3256 | I 7 | | |
| 3259 | J 3 | | |
| 3260 | J 3 | | |
| 3261 | J 6 | | |
| 3264 | K 4 | | |
| 3265 | K 4 | | |
| 3268 | K 6 | | |
| 3269 | J 7 | | |
| 3271 | H13 | | |
| 3272 | K10 | | |
| 3273 | J 9 | | |
| 3274 | I 9 | | |

CS 87 837
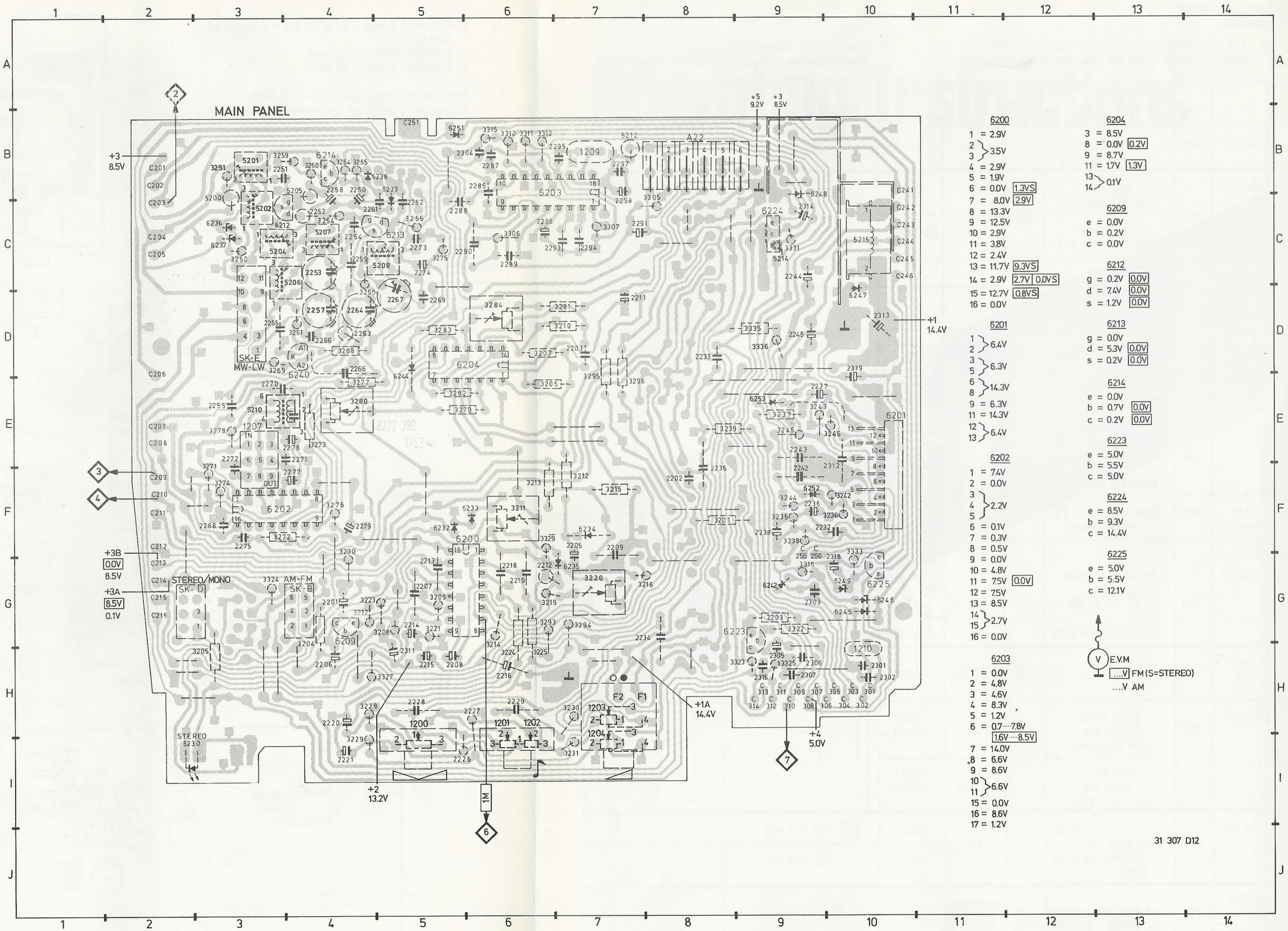
| ITEM | PCB |
|---|---|
| 1200 | H05 |
| 1201 | H06 |
| 1202 | H06 |
| 1203 | H07 |
| 1204 | H07 |
| 1207 | E03 |
| 1209 | B07 |
| 1210 | H10 |
| 1211 | I10 |
| 2201 | G04 |
| 2202 | F08 |
| 2203 | D07 |
| 2205 | F07 |
| 2206 | H04 |
| 2207 | G05 |
| 2208 | H05 |
| 2209 | F07 |
| 2211 | D07 |
| 2212 | G06 |
| 2213 | G05 |
| 2214 | G05 |
| 2215 | H05 |
| 2216 | H06 |
| 2218 | G06 |
| 2219 | G06 |
| 2220 | H04 |
| 2221 | I04 |
| 2226 | I05 |
| 2227 | H06 |
| 2228 | H05 |
| 2229 | H06 |
| 2232 | F09 |
| 2233 | D08 |
| 2234 | G07 |
| 2235 | F08 |
| 2236 | F09 |
| 2237 | E09 |
| 2238 | F09 |
| 2242 | F09 |
| 2243 | E09 |
| 2244 | C09 |
| 2245 | D09 |
| 2251 | B03 |
| 2252 | C04 |
| 2253 | C04 |
| 2254 | C04 |
| 2255 | E03 |
| 2256 | D04 |
| 2257 | D04 |
| 2258 | B04 |
| 2259 | C04 |
| 2260 | B04 |
| 2261 | C04 |
| 2262 | C05 |
| 2263 | D04 |
| 2264 | D04 |
| 2265 | D03 |
| 2266 | D04 |
| 2267 | D05 |
| 2268 | F03 |
| 2269 | D05 |
| 2270 | E03 |
| 2271 | E04 |
| 2272 | E03 |
| 2273 | C05 |
| 2274 | C05 |
| 2275 | F03 |
| 2277 | F04 |
| 2278 | E04 |
| 2279 | F04 |
| 2286 | B06 |
| 2287 | B06 |
| 2288 | C05 |
| 2289 | C06 |
| 2290 | C05 |
| 2291 | C07 |
| 2293 | C06 |
| 2294 | C07 |
| 2295 | B06 |
| 2296 | C06 |
| 2297 | B07 |
| 2298 | C07 |
| 2301 | H10 |
| 2302 | H10 |
| 2303 | G09 |
| 2304 | B05 |
| 2305 | H09 |
| 2306 | H09 |
| 2307 | H09 |
| 2311 | H05 |
| 2312 | F10 |
| 2313 | D10 |
| 2314 | C09 |
| 2316 | H09 |
| 2318 | G10 |
| 2319 | D10 |
| 3200 | F04 |
| 3201 | F08 |
| 3203 | G09 |
| 3204 | G04 |
| 3205 | H03 |
| 3206 | E06 |
| 3207 | D06 |
| 3208 | G05 |
| 3210 | D07 |
| 3211 | F06 |
| 3212 | F07 |
| 3213 | F06 |
| 3214 | G06 |
| 3215 | F07 |
| 3216 | G07 |
| 3220 | G05 |
| 3221 | G04 |
| 3223 | H06 |
| 3225 | H06 |
| 3228 | H04 |
| 3229 | I04 |
| 3230 | H07 |
| 3231 | I07 |
| 3235 | F09 |
| 3236 | F09 |
| 3237 | E09 |
| 3238 | F09 |
| 3239 | E09 |
| 3244 | F09 |
| 3245 | E09 |
| 3246 | E10 |
| 3250 | C03 |
| 3251 | B03 |
| 3254 | C04 |
| 3255 | C05 |
| 3256 | D04 |
| 3259 | B03 |
| 3260 | B04 |
| 3261 | D04 |
| 3264 | B04 |
| 3265 | B04 |
| 3269 | D03 |
| 3271 | E03 |
| 3272 | F03 |
| 3273 | E04 |
| 3274 | F03 |
| 3275 | C05 |
| 3276 | F04 |
| 3277 | E04 |
| 3278 | E03 |
| 3279 | E05 |
| 3280 | E04 |
| 3281 | D07 |
| 3282 | E05 |
| 3283 | D05 |
| 3284 | D06 |
| 3293 | G06 |
| 3294 | G07 |
| 3295 | E07 |
| 3296 | E07 |
| 3305 | C08 |
| 3306 | C06 |
| 3307 | C07 |
| 3310 | B06 |
| 3311 | B06 |
| 3312 | B06 |
| 3315 | B06 |
| 3316 | G09 |
| 3322 | G09 |
| 3323 | H08 |
| 3324 | G03 |
| 3325 | H09 |
| 3327 | H05 |
| 3329 | F06 |
| 3331 | C09 |
| 3333 | F10 |
| 3335 | D09 |
| 3336 | D09 |
| 5200 | B03 |
| 5201 | B03 |
| 5202 | C03 |
| 5204 | C03 |
| 5205 | B04 |
| 5206 | C04 |
| 5207 | C04 |
| 5208 | C05 |
| 5210 | E03 |
| 5212 | B07 |
| 5214 | C09 |
| 5215 | C10 |
| 6200 | F05 |
| 6201 | E10 |
| 6202 | F03 |
| 6203 | B06 |
| 6204 | D05 |
| 6209 | G04 |
| 6212 | C03 |
| 6213 | C05 |
| 6214 | B04 |
| 6223 | G08 |
| 6224 | C09 |
| 6225 | G10 |
| 6230 | I02 |
| 6232 | F05 |
| 6233 | F05 |
| 6234 | F07 |
| 6235 | G07 |
| 6236 | C03 |
| 6237 | C03 |
| 6238 | B05 |
| 6239 | B05 |
| 6240 | D04 |
| 6242 | G09 |
| 6244 | D05 |
| 6245 | G10 |
| 6246 | G10 |
| 6247 | D10 |
| 6248 | B09 |
| 6249 | G10 |
| 6251 | B05 |
| 6252 | F09 |
| 6253 | E09 |
| SK-B | G04 |
| SK-D | G02 |
| SK-E | D03 |
| SK-F | H07 |