Cassette Autoradio 22AC700/19/29/50/67/78
22AC704/22/93

Service
Service
Service

For tape deck see
Service Manual D5

Service Manual

12 V

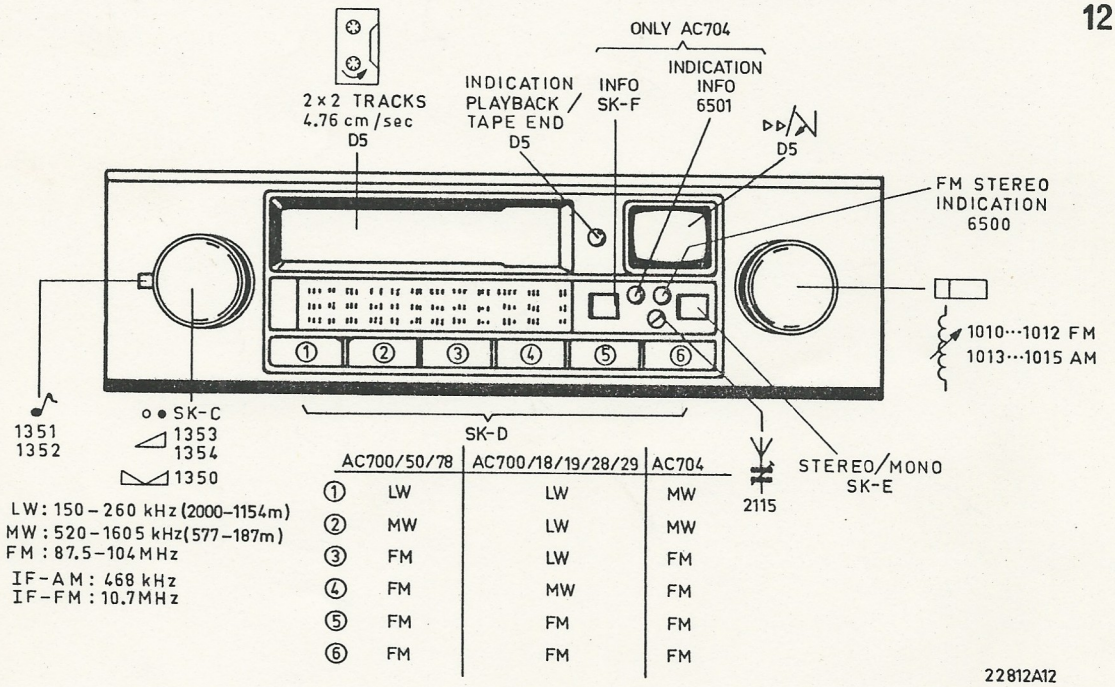

	AC700/50/78	AC700/18/19/28/29	AC704
①	LW	LW	MW
②	MW	LW	MW
③	FM	LW	FM
④	FM	MW	FM
⑤	FM	FM	FM
⑥	FM	FM	FM

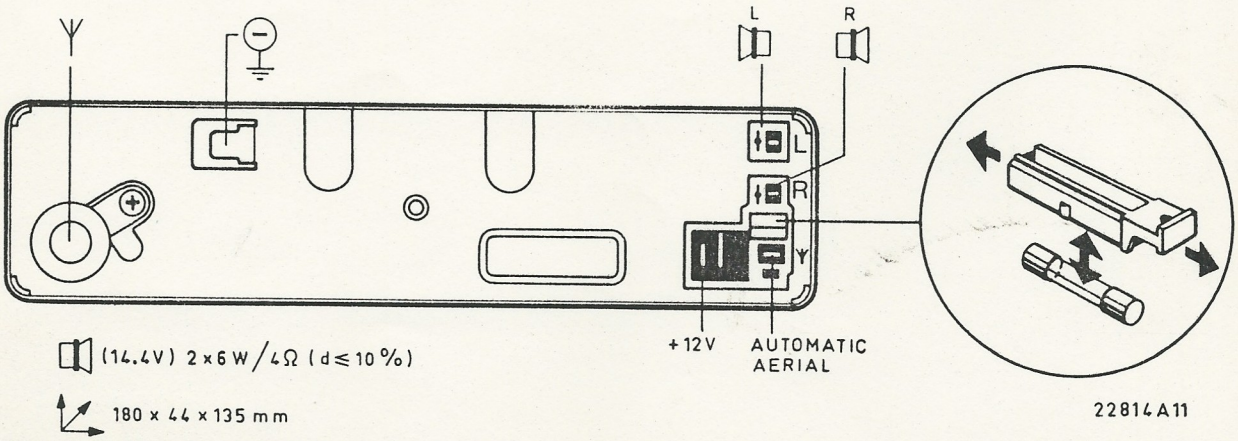

Documentation Technique Service Dokumentation Documentazione di Servizio Huolte-Ohje Manual de Servicio Manual de Serviçio

Subject to modification
4822 725 14078
Printed in The Netherlands

PHILIPS

CS 75 099Eur

SK...							
MW (518-1620 kHz)	468 kHz	A	Min. L	5061,5062 5063	5064 5063		Max. 1
		B			5062 5061		Max. 1
		C			5059		Min. 1
MW (518-1620 kHz)	516 kHz	C	Max. L	2115	1015		Max. 1
LW (149-262 kHz)	148 kHz				5066		
MW (518-1620 kHz)	600 kHz				1013		
	1500 kHz				2115		
LW (149-262 kHz)	165 kHz				1014		
	245 kHz				5057		
FM 87.335-104.5 MHz	87.335 MHz		Max. L	1	1012		Max. 1
	96 MHz				1011 1010		
	96 MHz wobulated	D			5053	2 2	
	3				5054		0 ± 5 mV 3
	96 MHz	D					0 ± 5 mV 3
	96 MHz (AM 1 kHz)				3077		Min. 1
	96 MHz						0 ± 30 mV 3 4

A

STEREODECODER

FM 87.335-104.5 MHz					3102		4 5
	RF+MPX from stereocoder PM6455	D			3111 cross-talk		1 6

SK/BK/DK DECODER

The signal has been taken from VRF-coder 157Z (Luther & Maelzer)

FM 87.335-104.5 MHz	HF+BK(A)	D			5800		Max. BK 5 7
	HF+BK(A)+DK				3843		Max. 6

GB

1 Close bridge A.
Adjust 3111 to minimum R.

2 Open bridge B.

3 Without signal and with short-circuited dummy aerial input.

4 If this voltage is not correct, check the adjustment of 5054.
If necessary, readjust 5054 and repeat A.

5 Adjust for 76 kHz ± 300 Hz by means of a frequency counter.

6 Adjust for a 0 dB reading on the AC millivoltmeter by means of the volume control.
Eliminate the R-signal (if measurements are performed on the right-hand channel) from the MPX-signal and adjust for a minimum deflection on the AC millivoltmeter by means of 3111.

7 The voltage on 5 is not allowed to exceed 0,2 V.
Should this be the case, it will be necessary to decrease the input signal.

During measurements and adjustments the tape transport should be connected.
Moreover, by means of an extra lead an earth connection should be made between main PCB and tape transport.

NL

1 Brug A sluiten.
3111 op minimum R instellen.

2 Brug B openen.

3 Zonder signaal en met kortgesloten kunstantenneingang.

4 Indien deze spanning niet correct is, de instelling van 5054 controleren.
Indien nodig 5054 opnieuw instellen en A herhalen.

5 M.b.v. een frequentieteller afregelen op 76 kHz ± 300 Hz.

6 Stel met behulp van de volumeregelaar de uitslag van de ~ mV meter in op 0 dB.
Verwijder het R-signaal (indien gemeten wordt op rechter kanaal) van het MPX signaal en regel m.b.v. 3111 af op minimum ~ mV uitslag.

7 De spanning op 5 mag niet boven 0.2 V komen.
Indien dit toch het geval is, moet het ingangssignaal kleiner gemaakt worden.

Tijdens metingen en afregelen moet het loopwerk aangesloten zijn.
Bovendien moet door middel van een extra draad een massaverbinding tussen hoofdprint en loopwerk gemaakt worden.

F

1 Fermer le pontet A.
Régler 3111 au minimum de R.

2 Ouvrir le pont B.

3 Ne pas appliquer de signal et court-circuiter l'entrée d'antenne factice.

4 Si cette tension n'est pas exacte, vérifier d'abord le réglage de 5054.
Si besoin en est, ajuster à nouveau 5054 et répeter A.

5 Ajuster sur 76 kHz ± 300 Hz à l'aide d'un fréquençemètre

6 A l'aide de la commande de volume, régler le millivoltmètre en ~ à 0 dB.
Eliminer le signal R (si l'on mesure sur la voie de droite) du signal MPX et régler sur une déviation minimale du millivoltmètre en ~ à l'aide de 3111.

7 La tension sur 5 ne doit pas dépasser 0,2 V.
Si c'est quand même le cas, le signal d'entrée doit être rendu plus petit.

En cours de réglages et de mesures, la mécanique doit être connectée.
En outre, il faudra effectuer une connexion à la masse entre la platine principale et la mécanique.

D

1 Brücke A schliessen.
3111 auf Mindestwiderstand einstellen.

2 Brücke B öffnen.

3 Ohne Signal und mit kurzgeschlossenem Eingang der künstlichen Antenne.

4 Wenn diese Spannung nicht richtig ist, die Einstellung von 5054 kontrollieren. Gegebenenfalls 5054 erneut einstellen und A wiederholen.

5 Mit Hilfe eines Frequenzmessers auf 76 kHz ± 300 Hz regeln.

6 Mit Hilfe des Lautstärkereglers den Ausschlag des Wechselmillivoltmeters auf 0 dB einstellen.
Das R-Signal (wenn am rechten Kanal gemessen wird) vom Multiplexsignal (MPX) abtrennen und mit 3111 auf Mindestausschlag des Wechselmillivoltmeters regeln.

7 Die Spannung an 5 soll nicht 0,2 V überschreiten. Sei dies trotzdem der Fall, soll das Eingangssignal geringer gemacht werden.

Während der Messungen und Einstellungen soll das Laufwerk angeschlossen sein.
Ausserdem soll mittels eines Zusatzdrahtes eine Massenverbindung zwischen Hauptprintplatte und Laufwerk hergestellt werden.

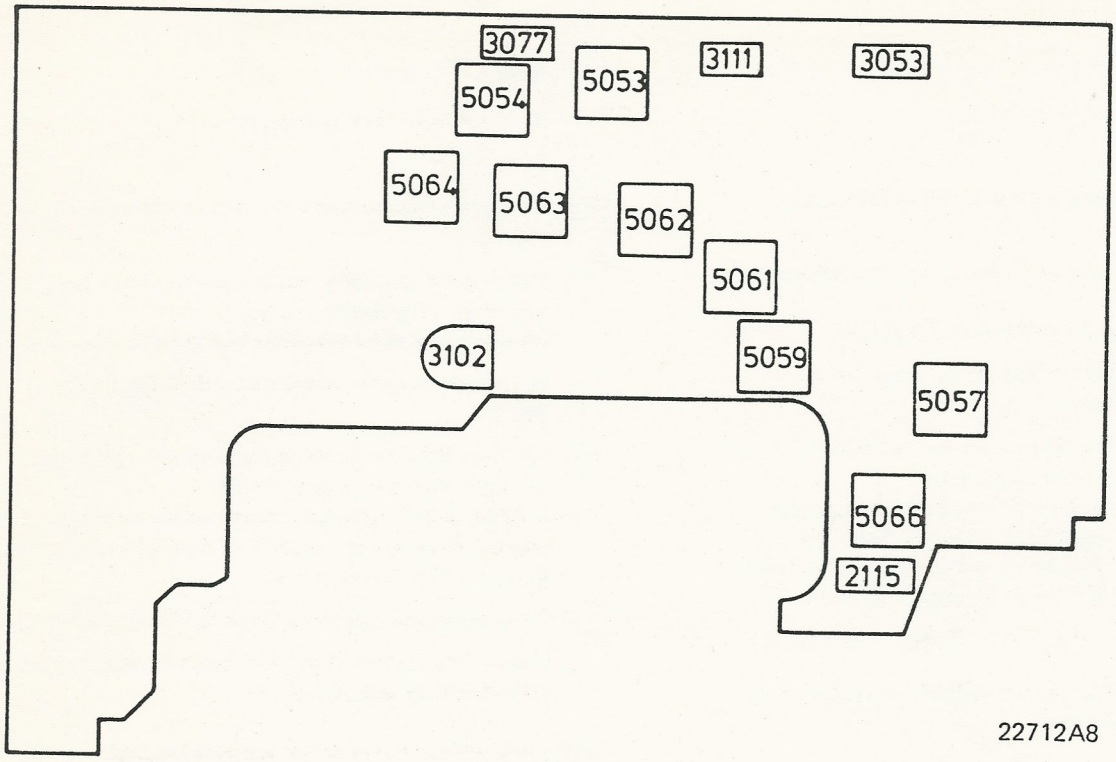

"Bei notwendigem Abgleich ist das Gerät auf die gesetzlich vorgeschriebenen Eckfrequenzen abzugleichen".

Einstellen der Zwangslautstärke

Mit R3875 die Zwangslautstärke auf den verlangten Pegel einstellen.
Dies kan während einer Durchsage erfolgen.

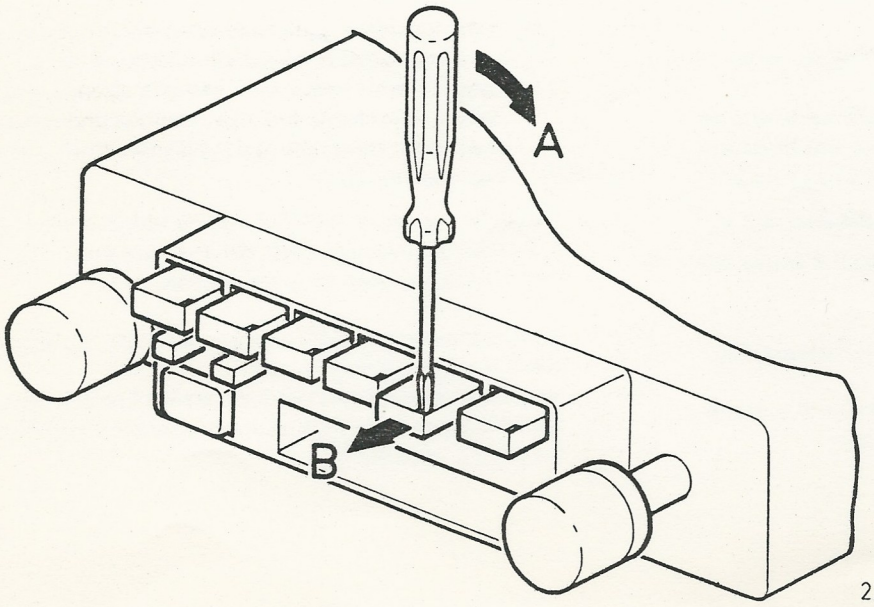

MISC	6083 6084 6053 6058 5061 6059 6056 6070 6054 6071 6075 5053 6074 5054 6087 6079 6078 6081 6050 6088
	5057 5058 5059 5066 6063 6065 6091 5062 5050 5063 6060 5064 6064
R	3117 3062 3111 3070 3151 3125 3077 3079 3137 3134 3096 3090 3094 3146
	3053 3112 3119 3141 3073 3072 3051 3080 3133 3135 3095 3091 3107 3147
	3056 3057 3061 3065 3113 3050 3124 3129 3101 3132 3152 3100 3155 3106 3105
	3055 3120 3118 3143 3071 3082 3087 3104
	3144 3140 3066 3142 3150 3086 3128 3102
C	2118 2119 2120 2147 2058 2149 2057 2059 2064 2051 2070 2072 2090 2136 2084 2095 2088 2094
	2140 2056 2145 2121 2079 2148 2152 2154 2050 2082 2125 2065 2071 2078 2129 2083 2155 2097 2096 2089 2102
	2116 2150 2080 2142 2146 2112 2111 2110 2115 2141 2066 2127 2126 2128 2077 2073 2133 2074 2134 2157 2104 2105 2103

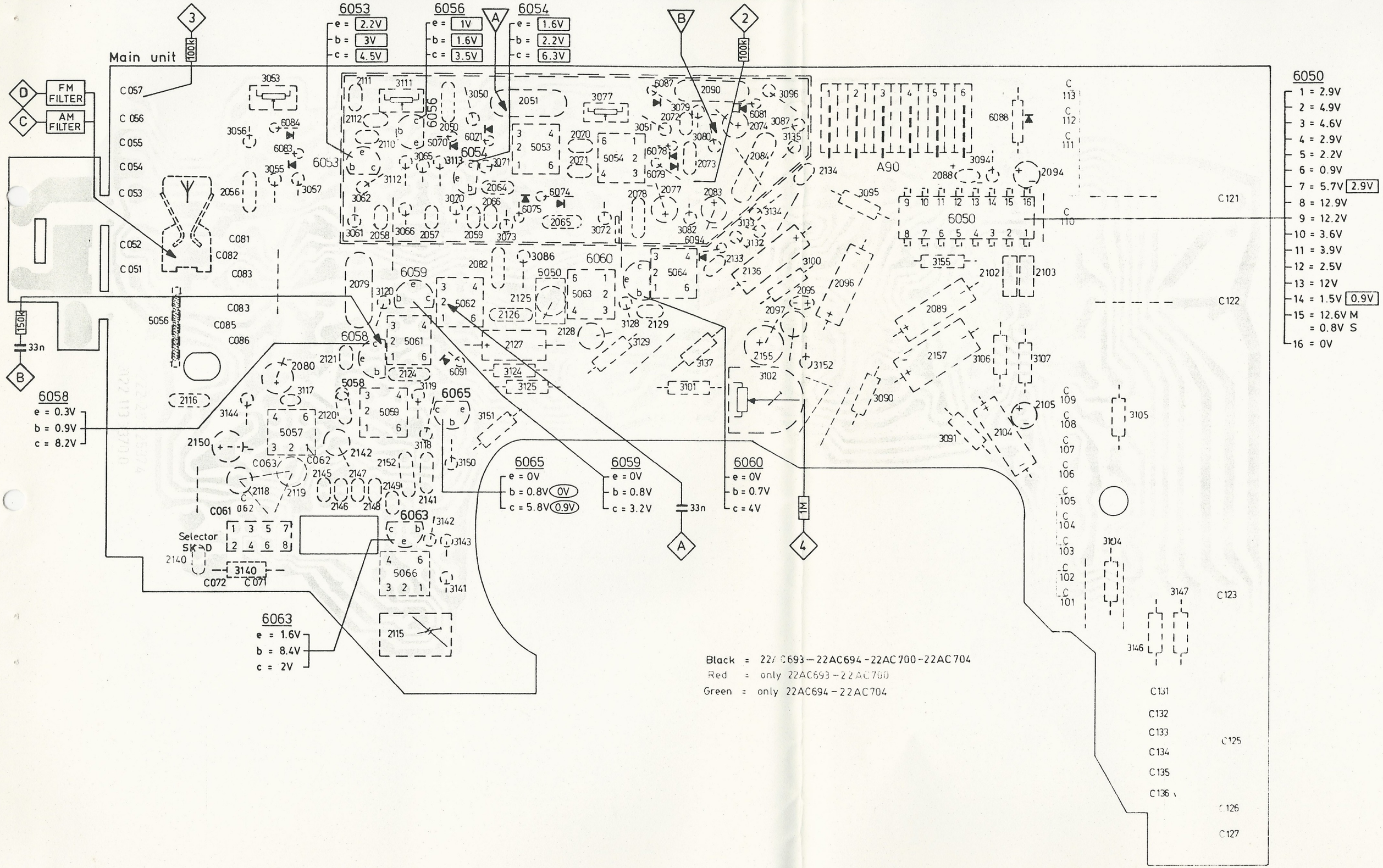

| | | |

| | | |

MISC	3	1350÷1354		6351.6352				6360	5350	5351	1360
R	33.	3351÷3354		3361÷3364		3357 3358	3359 3360 3365				
C	23.	2351÷2354	2357÷2360	2363÷2366			2369÷2374		2377÷2383		

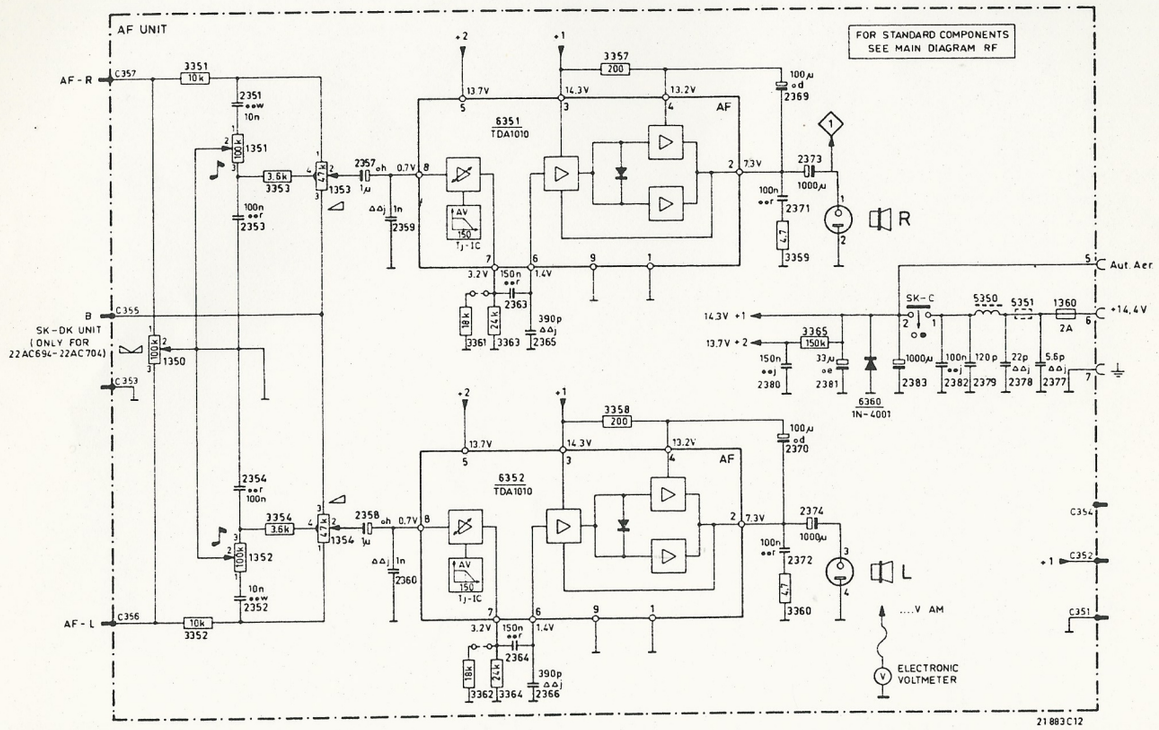

AF-UNIT

MISC	2...	3...
1360		
	2377	
	2371	
5351		3363
	2378	3359
		3361
	2365	
	2379	
	2359	
5350	2382	
	2363	
6351		
		3357
	2383	
		3360
	2369	
	2372	
6360	2381	
	2373	
	2370	
		3358
6352	2380	
	2374	
	2366	
	2364	
	2360	
		3362
	2358	3364
	2357	
		3365
	2354	3354
SK-C		
1353		3353
		3352
1354		
	2353	
	2351	
	2352	
1350		
1352		
1351		
		3351
MISC	2...	3...

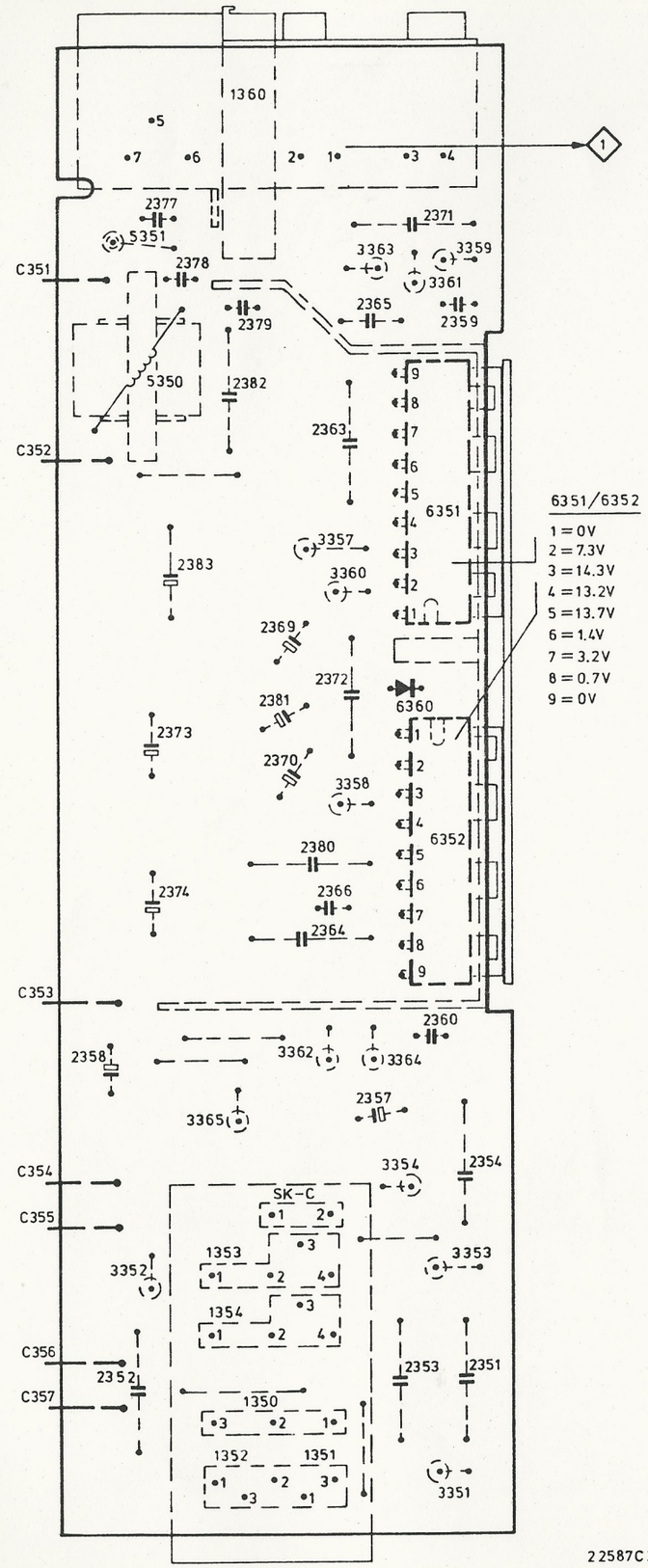

M	5800 7838 7845 7830.7831.7839.7837 7832.7835.7842.7836.7840.7841
C	2830 2835 2834 2837 2841 2842 2833 2838 2839 2832 2840 2831 2850.2848.2849 2847
R	3844 3845 3847 3849 3854 3855 3856 3850···3853 3846 3841···3843 3840.3868.3858 3865.3869.3872.3870.3871.3873 3875

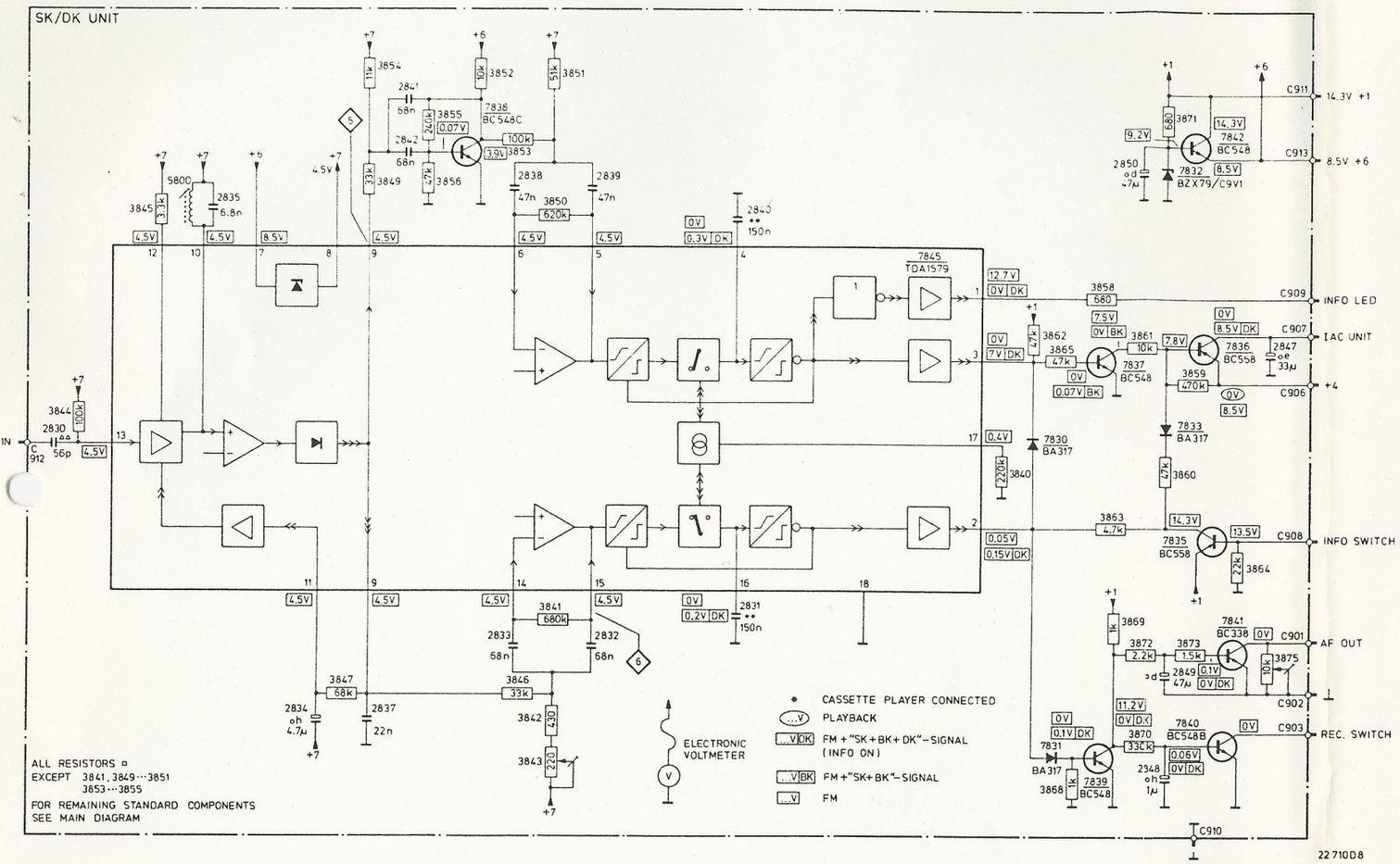

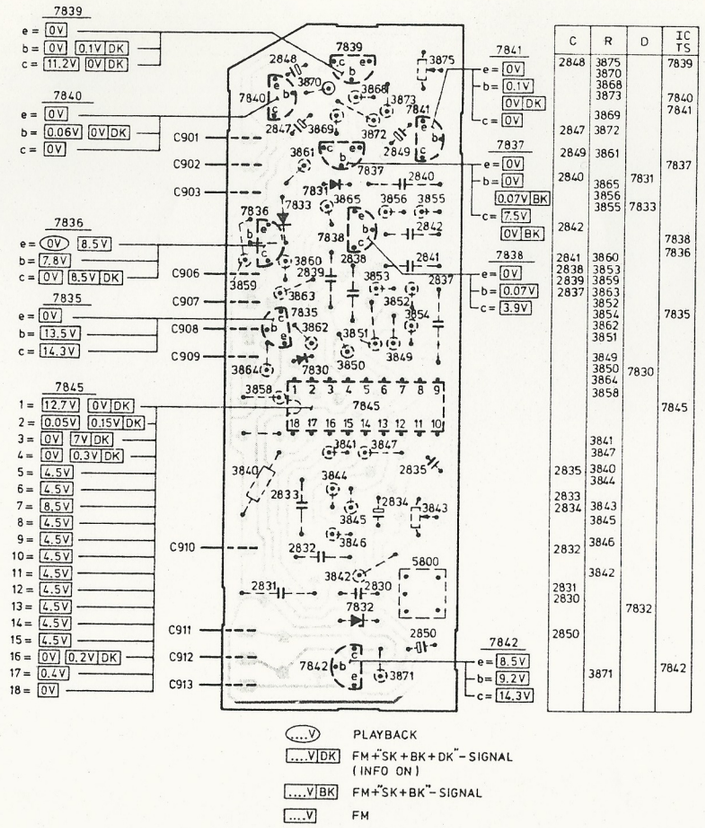

C	R	D	IC TS
2848	3875		7839
	3870		
	3868		
	3873		7840
			7841
	3869		
2847	3872		
2849	3861		7837
2840		7831	
	3865		
	3856		
	3855	7833	
2842			7838
			7836
2841	3860		
2838	3853		
2839	3859		
2837	3863		
	3852		
	3854		7835
	3862		
	3851		
	3849		
	3850	7830	
	3864		
	3858		
			7845
	3841		
	3847		
2835	3840		
	3844		
2833			
2834	3843		
	3845		
2832	3846		
	3842		
2831			
2830		7832	
2850			
	3871		7842

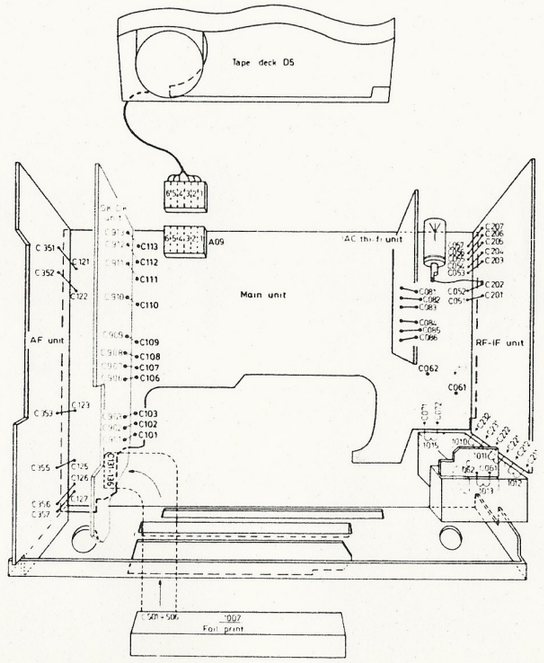

MISC	6088 6050 6081 6078 6079 6087 5054 6074 5053 6075 6071 6054 6070 6056 6059 5061 6058 6053 6084 6083
	6094 5064 6060 5063 5050 5062 6091 6065 6063 5066 5059 5058 5057
R	3146 3094 3090 3096 3134 3137 3079 3077 3125 3151 3070 3111 3062 3117
	3147 3107 3091 3095 3135 3133 3080 3051 3072 3073 3141 3119 3112 3053
	3105 3106 3155 3100 3152 3132 3101 3129 3124 3050 3113 3065 3061 3057 3056
	3104 3087 3082 3071 3143 3118 3120 3055
	3102 3128 3086 3150 3142 3066 3140 3144
C	2094 2088 2095 2084 2136 2090 2072 2070 2051 2064 2059 2057 2149 2058 2147 2146 2119 2118
	2102 2089 2096 2097 2155 2083 2129 2078 2071 2065 2125 2082 2050 2124 2152 2148 2079 2121 2120 2056 2150
	2103 2105 2104 2157 2134 2074 2133 2073 2077 2128 2126 2127 2066 2141 2115 2110 2111 2112 2142 2145 2080 2140 2116

Main unit

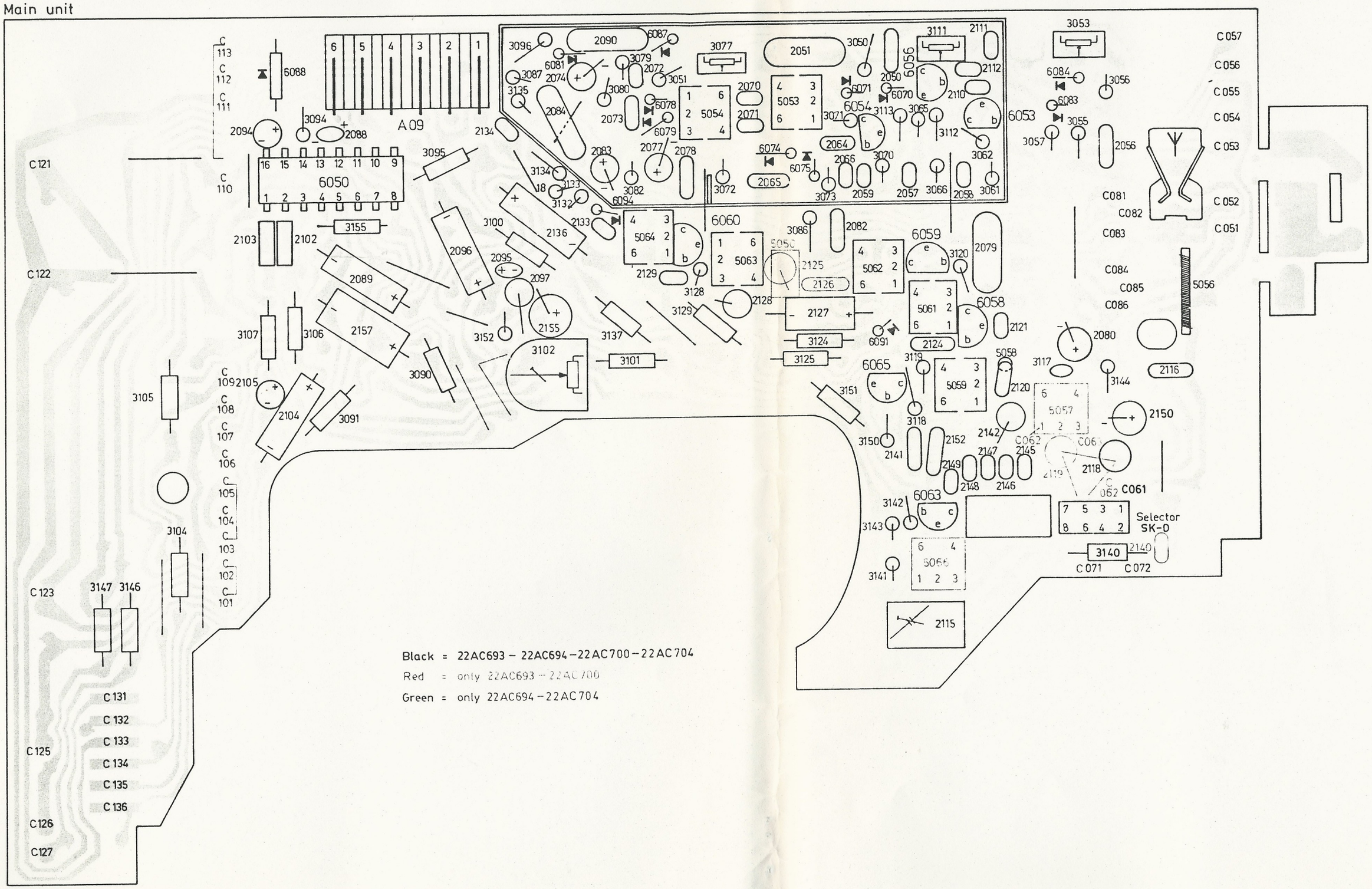

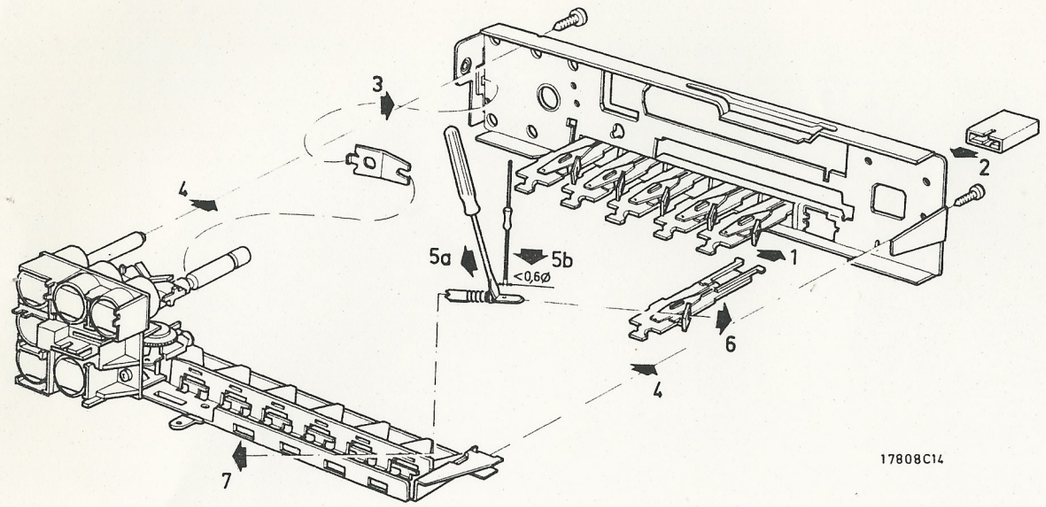

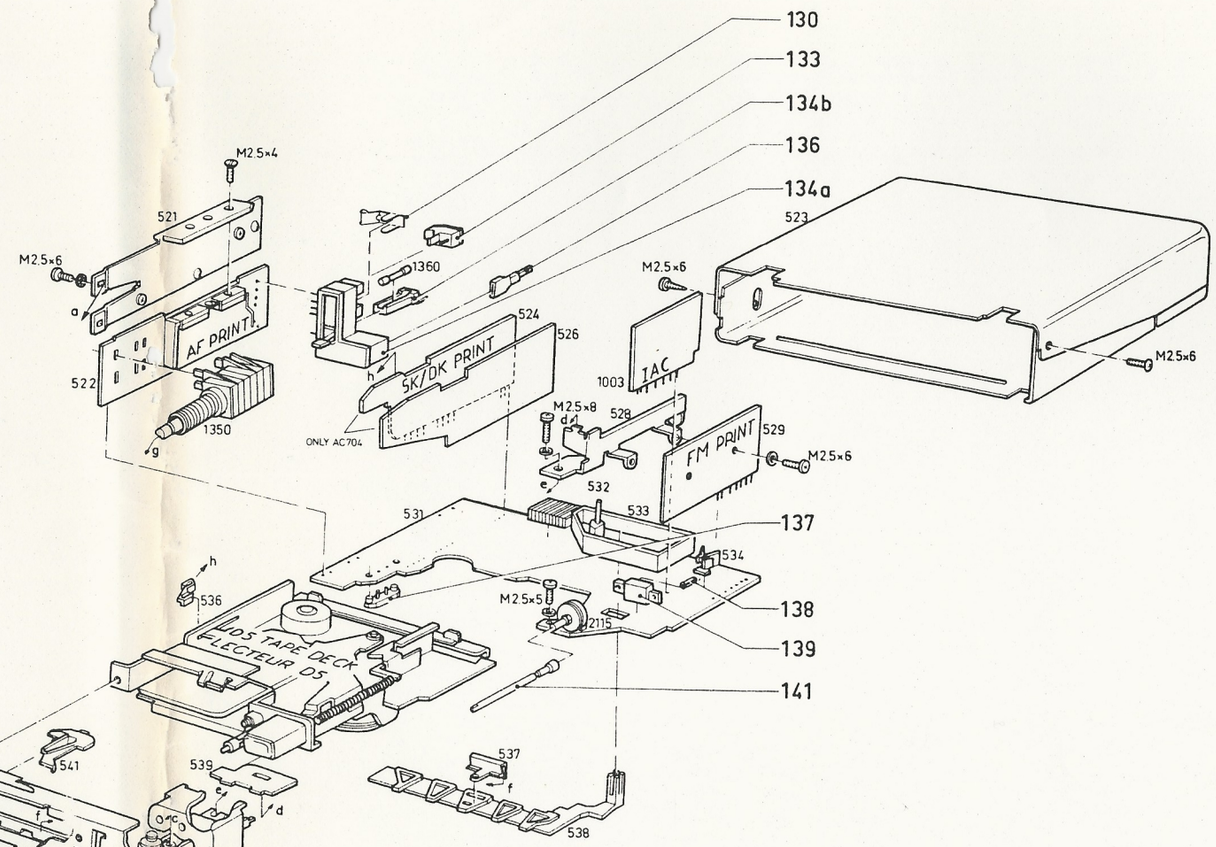

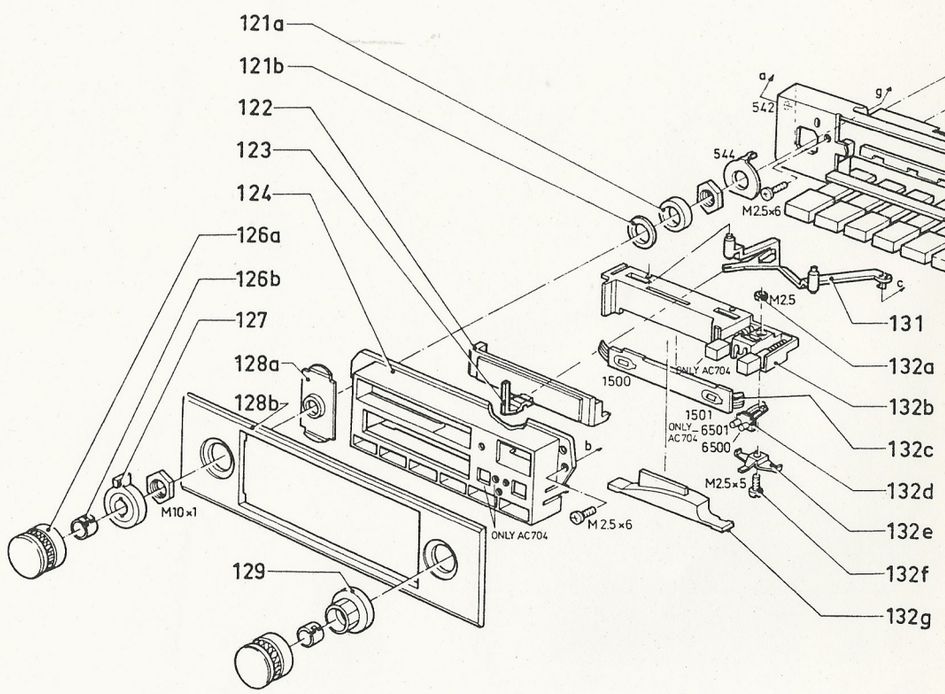

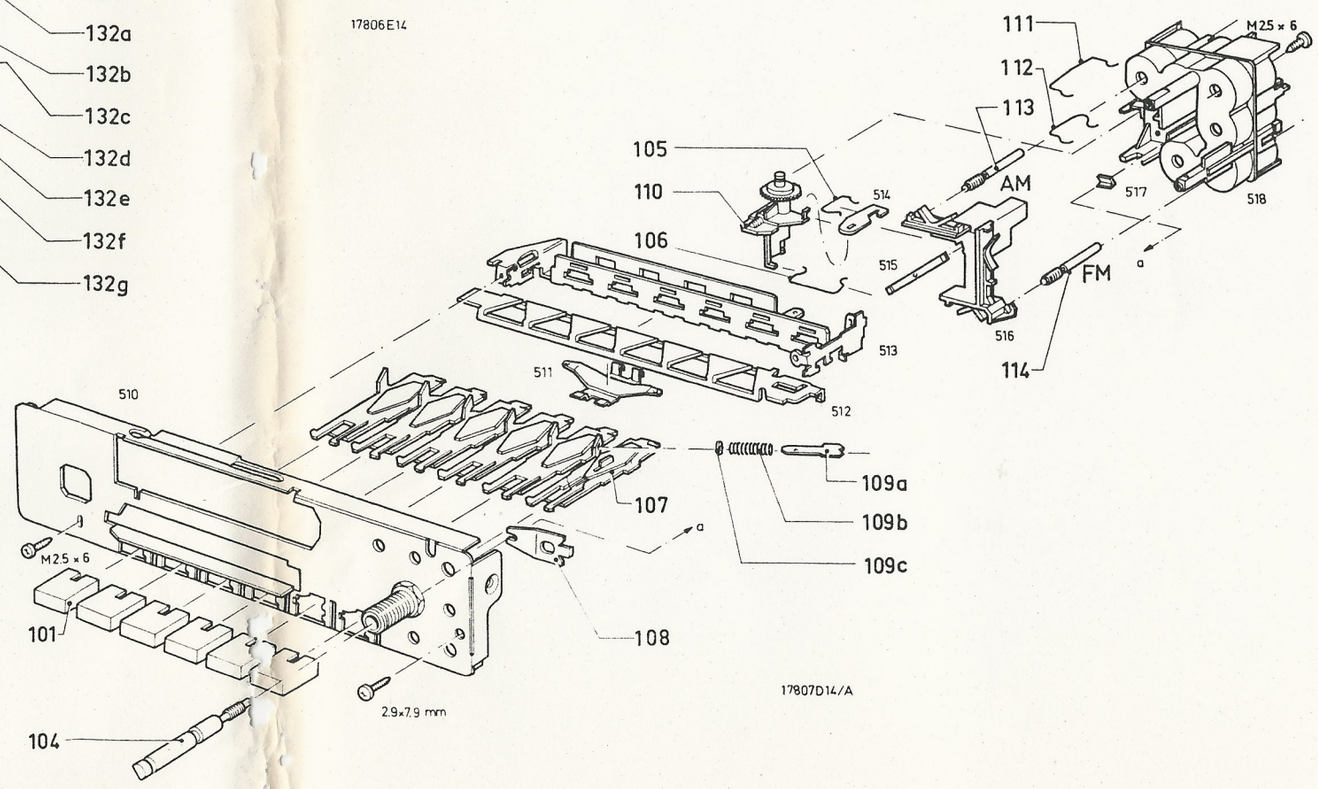

101 L-	4822 410 22518
M-	4822 410 22256
U-	4822 410 22257
104	4822 535 91129
105	4822 492 62216
106	4822 492 62218
107	4822 410 22258
108	4822 492 62215
109	4822 492 62214
110	4822 528 20253
111	4822 492 62219
112	4822 492 62217
113	4822 526 10109
114	4822 526 10155
121a,b	4822 310 10079
122 (704)	4822 454 10702
122 (700)	4822 331 10072
123	4822 450 80639
124 (704/22)	4822 423 50563
124 (704/93)	4822 423 50567
124 (700/50)	4822 423 50565
124 (700/..)	4822 423 50566
126a,b	4822 413 90054
127	4822 277 10503
128a,b	4822 423 50564
129	4822 466 80725
130	4822 492 40829
131	4822 404 20307
132 a÷g	4822 404 20239
133	4822 267 40235
134a,b	4822 267 50307
134b	4822 256 80039
136	4822 321 20347
137	4822 404 20303
138	4822 535 90892
139	4822 278 20323
141	4822 535 91131

EXPLODED VIEW

- For eject button (4822 410 22165) of cassette deck, refer to Exploded View of complete apparatus.
- Two springs (item nos. 115, 116) added. Refer to Fig. 3.
  Item no. 115 4822 492 62498
  Item no. 116 4822 492 62499
  Lubrication points changed.

Date of introduction: wk 136
Reason for change: better functioning.

- Item no 130 should read 4822 492 40849 (correction)
  Item no 132 a÷g should read 4822 404 20329 (correction)
  Item no 134 b should read 4822 256 30168 (correction)

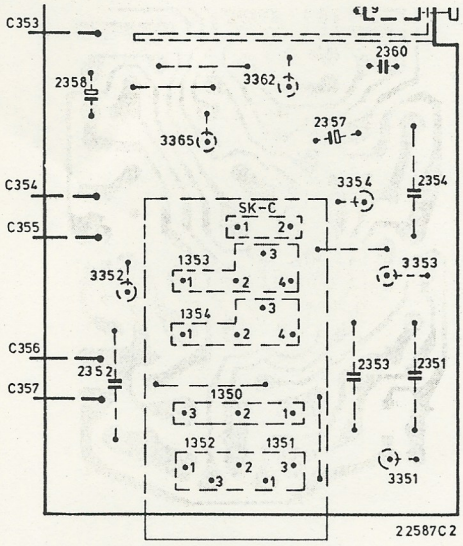

1350 - 1354 = 4822 102 30321

Fig. 1

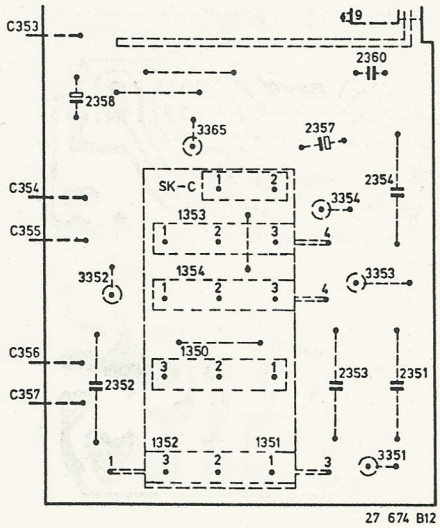

1350 - 1354 = 4822 101 50247

Fig. 2

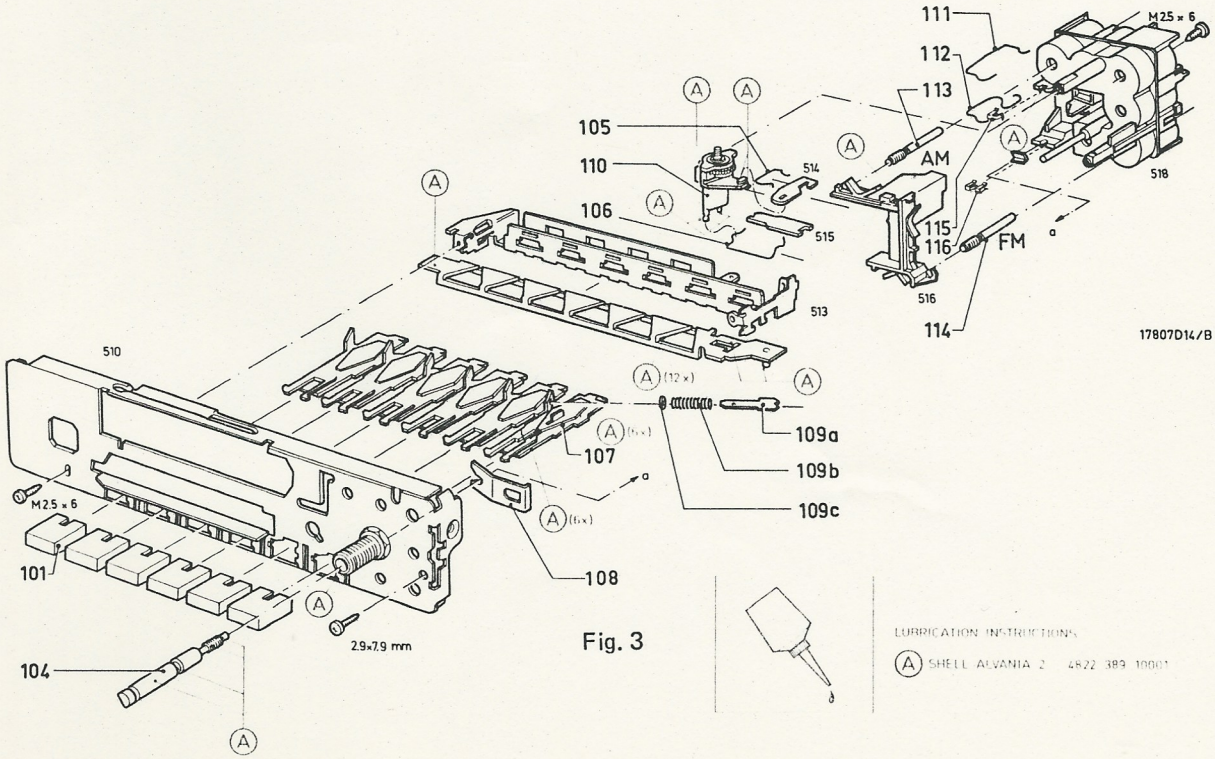

Fig. 3

2050,2065 2056-2059 2066,2110 2111,2129	10 nF - 63 V	4822 122 30043
2064	4.7 nF - 63 V	4822 122 31125
2078	120 pF - 2 % - 100 V N1500	4822 122 31284
2088	0.1 µF - 35 V	4822 124 10203
2094	0.1 µF - 50 V	4822 124 40348
2095	10 µF - 3 V	5322 124 10174
2097	560 pF - 1 %	5322 121 54131
2102,2103	15 nF - 10 %	4822 121 40406
2105	4.7 µF - 35 V	4822 124 40349
2112	22 nF - 63 V	4822 122 30103
2115	120 pF - trimmer	4822 125 50081
2118,2128	5.6 pF - 5 %	4822 121 50543
2119	4.7 nF - 5 % - 63 V	4822 121 50539
2124,2152	22 nF - 10 % - 100 V	4822 121 40513
2125	2.2 nF - 5 %	4822 121 50415
2141	220 nF - 2 % - 100 V N470	4822 122 31222
2142	6.8 nF - 5 %	4822 121 50538
2145-2147 2149	120 pF - 2 % - 100 V NP0	4822 122 31306
2201	82 pF - 2 % - 100 V N330	4822 122 31235
2202	6.8 pF - 0.25p - 100 V N150	4822 122 31049
2203	39 pF - 2 % - 100 V N150	4822 122 31405
2210,2253	150 pF - 2 % - 100 V N1500	4822 122 31308
2214	15 pF - 2 % - 100 V N150	4822 122 31404
2216	5.6 pF - 0.25p - 100 V N150	4822 122 31408
2221,2251 2252 2224-2231	10 nF - 63 V	4822 122 30043
2235	12 pF - 2 % - 100 V N220	4822 122 31406
2239	1.8 nF - 0.25p - 100 V P100	4822 122 31407
2245	120 pF - 2 % - 100 V NP0	4822 122 31306
2373,2374	1000 µF - 10 V	4822 124 40336
2379	120 pF - 2 % - 100 V N1500	4822 122 31284
2383	1000 µF - 16 V	4822 124 40335
2832,2833	68 nF - 5 % - 100 V	4822 121 50769
2835	6.8 nF - 2 % - 63 V	4822 121 50538
2837	22 nF - 10 % - 250 V	4822 121 40407
2838,2839	47 nF - 5 % - 250 V	4822 121 41206
2841,2842	68 nF - 5 % - 250 V	4822 121 41156

1350-1354	Volume etc.	4822 102 30321
3053	4.7 kΩ - lin.	4822 100 10236
3077	1 kΩ - lin.	4822 100 10021
3102	10 kΩ - lin.	4822 100 10035
3111	2.2 MΩ - lin.	4822 100 10164
3117	1 MΩ - VDR - 9 V	4822 116 20069
3841	680 kΩ - 0.4 W	4822 116 51321
3842	430 Ω - 0.4 W	4822 116 51229
3843	220 Ω - lin.	4822 100 10359
3849	33 kΩ - 0.4 W	4822 116 51259
3850	620 kΩ - 0.4 W	4822 116 51169
3851	51 kΩ - 0.4 W	5322 116 50672
3853	100 kΩ - 0.4 W	4822 116 51267
3854	11 kΩ - 0.4 W	5322 116 54623
3855	240 kΩ - 0.4 W	4822 116 51128
3875	10 kΩ - lin.	4822 100 10024

-Miscellaneous-

1360	Fuse 2 A(T)	4822 253 30025
1500,1501	Lamp 18 V - 90 mA	4822 134 40399
5050	Ceram. Resonator 468 kHz	4822 242 70278
5200-5202	Ceram. Filter	4822 242 70249
1003	IAC unit (Thi-fi)	4822 116 90034
SK-E		4822 278 90399
SK-F		4822 278 90412

1010,1011	4822 156 20714
1012	4822 156 20715
1013	4822 156 20702
1014	4822 156 20704
1015	4822 156 20706
5053	4822 153 50108
5054	4822 153 50102
5056	4822 158 10107
5057	4822 156 20703
5058	4822 526 10016
5059,5063	4822 156 40646
5061	4822 153 20224
5062	4822 156 30654
5064	4822 153 20226
5066	4822 156 20705
5206	4822 157 50204
5210	4822 157 50739
5350	4822 157 10096
5351	4822 526 10162
5800	4822 156 40738

6050	TDA1005-A	4822 209 80514
6053,6054	BF241	4822 130 40898
6056	BC548B	4822 130 40937
6058-6060	BF494B/BF495C/ BF495D	4822 130 40949
6063	BF495	4822 130 40947
6065	BC548	4822 130 40938
6070,6071 6074,6075 6083,6084 6087	BA216	4822 130 30702
6078,6079	2-AA119	4822 130 30312
6081	BZX79/C4V7	4822 130 34174
6088,6091 6094	AA119	4822 130 31012
6200,6208	BF324	4822 130 41448
6201	BF495C	4822 130 41499
6203	BF240	4822 130 40902
6204	BF494B	4822 130 41376
6206	BF241C	4822 130 41308
6215	BB417	4822 130 41374
6351	TDA1010 (bent)	4822 209 80792
6352	TDA1010 (bent)	4822 209 80791
6360	IN4001	4822 130 30829
6500	CQY95	4822 130 30923
6501	CQY97	4822 130 30955
7830,7831 7833	BA317	4822 130 30847
7832	BZX79/B9V1	4822 130 30862
7835,7836	BC558B	4822 130 44197
7837,7839 7842	BC548	4822 130 40938
7838	BC548C	4822 130 44196
7840	BC548B	4822 130 40937
7841	BC338	4822 130 44121
7845	TDA1579	4822 209 80755

Previously published: A81-358

- 22AC704: The functioning of the Info switch has been reversed, so that the mono/stereo switch and the Info switch are identical. TS7835 and R3864 on the SK/DK unit have been deleted.
  Introduced: week 216.
  Service supplies the components of the Info and stereo switches under the following code numbers:
  Knob 4822 278 90427.
  Knob + contact spring + compression spring + pin 4822 276 20287.
  Pin 4822 535 91074.

- Main PCB: C2116 has been replaced by a diac diode BR100/03, code number 4822 130 20039.
  Introduction: during production.
  Reason: protection.

- SK/DK unit: (22AC704) R3863 changed to 12k and R3868 changed to 1,8k.

- AF unit: R3359-3360 changed to 1,2 Ohms.

Copyright reserved. Confidential information for Service-dealers
Printed in the Netherlands

Production start: 22AC700 - TC01
22AC704 - TC01

FM PANEL

- D6214 (type BAW62, 4822 130 30613) added between emitter and base of TS6200 (cathode connected to emitter).
  Introduced during the course of production.
- C2234 changed to 4,7 pF
  R3211 changed to 100 kΩ
  R3212 changed to 1,8 kΩ
  R3213 changed to 390 Ω
  R3221 changed to 120 kΩ
  R3222 changed to 680 Ω
  Date of introduction: At start of production
  Reason for change: to improve FM sensitivity.
- TS6208 in circuit diagram should read BF324.

MAIN PANEL

- C2051 changed to 0,33 μF - 63 V.
  R3114 (10 kΩ) added between junction R3112, collector TS6056 and anode of D6087.
  C2113 (68 μF - 6,3 V) added between junction R3114, anode D6087 and ground.
  Date of introduction: at start of production.
  Reason for change: to delay response of SDR.
- R3053 replaced with 10 kΩ trimming pot (4822 100 10024).
  R3054 (820 Ω) added between R3053 and ground.
  Introduced during the course of production.
  Reason for change: improved adjustment.
- State in circuit diagram the value of C2142, being 6,8 nF.
- Only AC704: R3112 changed to 5,6 kΩ.
  Date of introduction: at production start-up.
- TS6060 changed to type BF495D.
  Date of introduction: at production start-up.
- Only AC704: IAC-unit changed, new code no 4822 111 90066.
  Introduced: TC02
  Reason: "AMTSBLATT" adaptation.

AF PANEL

- C2358 changed to 1,5 μ - 25 V tantalum (5322 124 14029).
  Date of introduction: during production.
- R3361,3362 changed to 24 kΩ.
- R3363,3364 deleted.
  Introduction: at production start up
- Item 6351, 6352 changed in TDA1020
  6351 - 4822 209 81109 (bent)
  6352 - 4822 209 81111 (bent)
  Besides following item nos. have been changed simultaneously
  C2351, C2352 changed to 15 nF - ●● W
  C2365, C2366 changed to 2.2 nF - ●● j
  R3351, R3352 changed to 4.7 K
  R3357, R3358 deleted
  R3361, R3362 deleted

  Only AC700:
  C2377, C2378, C2379 deleted
  S5351 deleted (interconnect!)
  Introduction: AC700 - TC02132
  AC704 - TC03132
  Reason: Quality improvement.
- During the course of production two different AF-panels have been used.
  The differences between these panels are shown in Fig. 1 and Fig. 2, and concerns the potpack (item 1350-1354) and the copper lay-out.
  When replacing of the potpack is required, first compare your AF-panel with Fig. 1 and 2 before ordering the potpack.
- In the electrical partslist following item nos have to be changed:
  Item 6351 TDA1010 (bent) 4822 209 80791 (correction)
  Item 6352 TDA1010 (bent) 4822 209 80792 (correction)
- Adjustment of gradual MONO/STEREO change-over

  For adjustment of the sliding mono/stereo change-over the following procedure should be observed:

  a Connect AC millivoltmeters to the loudspeaker terminals.
  b Via a dummy aerial, inject a 96 MHz - 75 μV RF stereo signal (FM 1 kHz, Δf=22,5 kHz).
  c Tune the set for maximum voltmeter reading.
  d Adjust the voltmeters for equal readings by means of the balance control.
  e Adjust the voltmeters for a 0 dB reading by means of the volume control.
  f Eliminate the R-signal from the injected stereo signal and adjust for a 10 dB difference between both voltmeters by means of 3111.
  g. Check whether the 10 dB difference also exists when the L-signal is eliminated.

Copyright reserved. Confidential information for Service-dealers

Printed in the Netherlands