Car radio Cassetteplayer 22AC460/79/80/84/85

Service
Service
Service

Service Manual

12 V

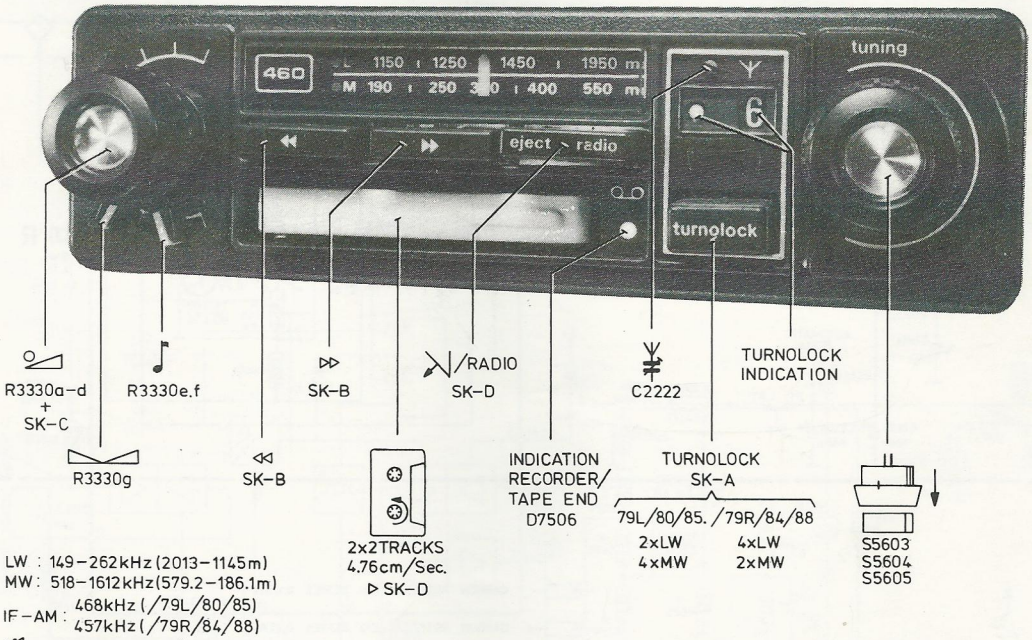

LW : 149–262kHz (2013–1145m)
MW : 518–1612kHz (579.2–186.1m)
IF–AM : 468kHz (/79L/80/85)
457kHz (/79R/84/88)
(14V): 2x5W (d=10%)
DIMENSIONS : 179.4x43.8x136mm

10851B12

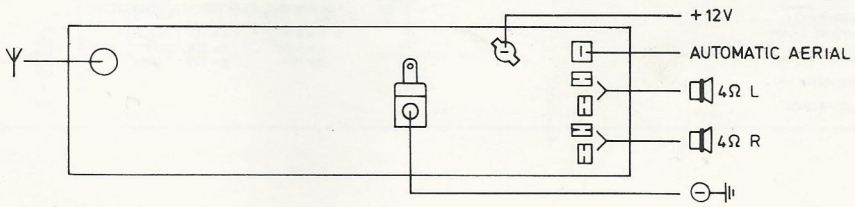

10850A12

Documentation Technique Service Dokumentation Documentazione di Servizio Huolte-Ohje Manual de Servicio Manual de Serviço

Subject to modification

4822 725 12123

Printed in The Netherlands

PHILIPS

SK...					
MW (518-1612 kHz)	468 kHz/80/85/79L 457 kHz/84/88/79R	A	Min. L	S5212,S5211 S5210,S5209	Max. 1
		B		S5207	Min. 1
MW (518-1612 kHz)	1				
	516 kHz	B	Max. L	S5605	Max. 1
	600 kHz			S5603	
	1500 kHz			C2223	
LW (149-262 kHz)	148 kHz	B	Max. L	S5208	
	165 kHz			S5604	
	245 kHz			S5206	

Repeat

GB

During measurements and/or adjustments the tape deck should be switched on. Besides, an extra wire should be used for connection to earth of the main set and tape deck.

1 Turn C2223 to central position
Turn C2222 according to Fig. 2.

F

Avant de procéder aux mesures et aux ajustages on veillera à brancher la mécanique. Il faudra un fil suplémentaire de liaison de la masse de l'appareil à la mécanique.

1 Placer C2223 en position médiane.
Placer C2222 selon l'indication en Fig. 2.

I

Prima di fare le regolazioni e le misure occorrerà collegare la meccanica. Bisognerà collegare un filo di massa dal apparecchio alla meccanica.

1 Posizionare C2223 al centro.
Posizionare C2222 secondi i dati della Fig. 2.

NL

Tijdens metingen en afregelingen, moet het tape deck aangesloten zijn. Tevens moet met een extra draad een massaverbinding van het hoofdapparaat met het tape deck bestaan.

1 Draai C2223 in de middenstand
Draai C2222 volgens Fig. 2.

D

Während Messungen und Abgleicharbeiten muss das Laufwerk angeschlossen sein. Ausserdem muss mit einem Zusatzdraht eine Massenverbindung zwischen dem Hauptgerät und dem Laufwerk hergestellt sein.

1 C2223 in mittlere Stellung drehen.
C2222 drehen wie in Abb. 2 angegeben.

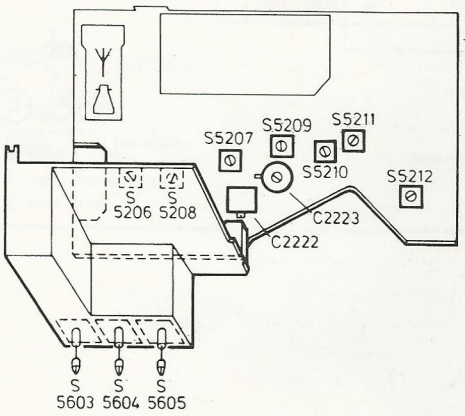

Fig. 1

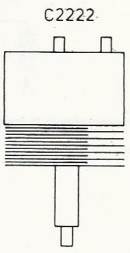

Fig. 2

DECASING THE TAPE DECK

Fig. 9

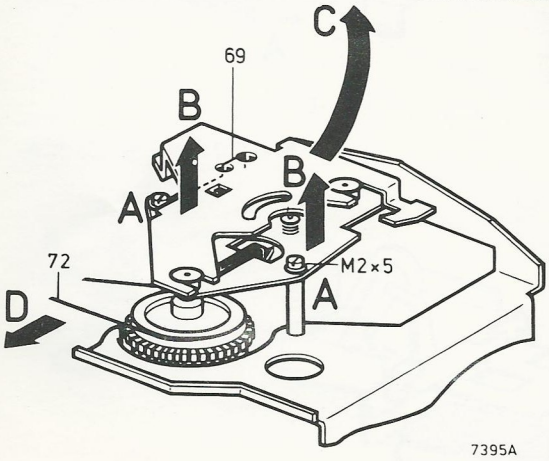

Fig. 10

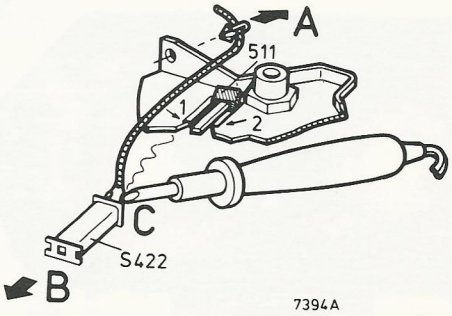

Fig. 11

GB

Working of the recorder (Figs. 6, 7 und 8)

In Figures 6, 7 und 8, arrows indicate the movements of the components when a certain operation is performed (These components are shaded).
In the tables enclosed, the sequence of the movements drawn in the Figures has been indicated.
Fig. 6 illustrates the starting positions.
Fig. 7 and 8 represents the result of the movements shown in Fig. 6 (cassette has been inserted).

NL

De werking van de recorder (Fig. 6, 7, 8)

In genoemde figuren zijn met pijlen de bewegingen aangegeven, die de onderdelen maken bij een bepaalde handeling. (Deze onderdelen zijn gearceerd).
In de bijgevoegde tabellen is de volgorde aangegeven van de bewegingen zoals die in de figuren gelezen moeten worden.
Fig. 6 geeft de uitgangspositie weer.
Fig. 7 en 8 is het resultaat van de bewegingen uitgevoerd in Fig. 6 (kassette is dus ingebracht).

F

Fonctionnement du magnétophone (Fig. 6, 7, 8)

Dans les figures, les flèches indiquent les mouvements de certains éléments en cas de manipulations déterminées (cas éléments sont représentés en hachuré). Les tables en annexe donnent l'ordre de succession des mouvements tel qu'ils doivent être lus dans les figures.
La figure 6 représente la position de sortie.
La fig. 7 et 8 est le résultat de mouvements effectués en fig. 6. La cassette a donc été introduite.

D

Die Arbeitsweise des Recorders (Abbn. 6, 7 und 8)

In den Abbildungen 6, 7 und 8 bezeichnen die Pfeile die Bewegungen der Einzelteile bei einer bestimmten Handlung (Diese Einzelteile sind schraffiert).
In den beigefügten Tabellen ist die Reihenfolge der dargestellten Bewegungen angegeben.
Abbildung 6 gibt die Ausgangsposition an.
Abbildung 7 und 8 stellt die Bewegungen gemäss Abbildung 6 dar (die Cassette ist also ins Gerät gelegt).

I

Funzionamento del registratore (fig. 6, 7, 8)

Nelle figure, le frecce indicano i movimenti di alcune parti in caso di manipolazioni determinate: questi elementi sono rappresentati in tratteggio.
Le tavole in allegato danno l'ordine di successione dei movimenti da eseguire. La figure 6 rappresenta la posizione di uscita. La fig. 7 e 8 e il risultato dei movimenti effettuati in fig. 6: la cassette è ora stata introdotta.

POSITION PLAYBACK ▷

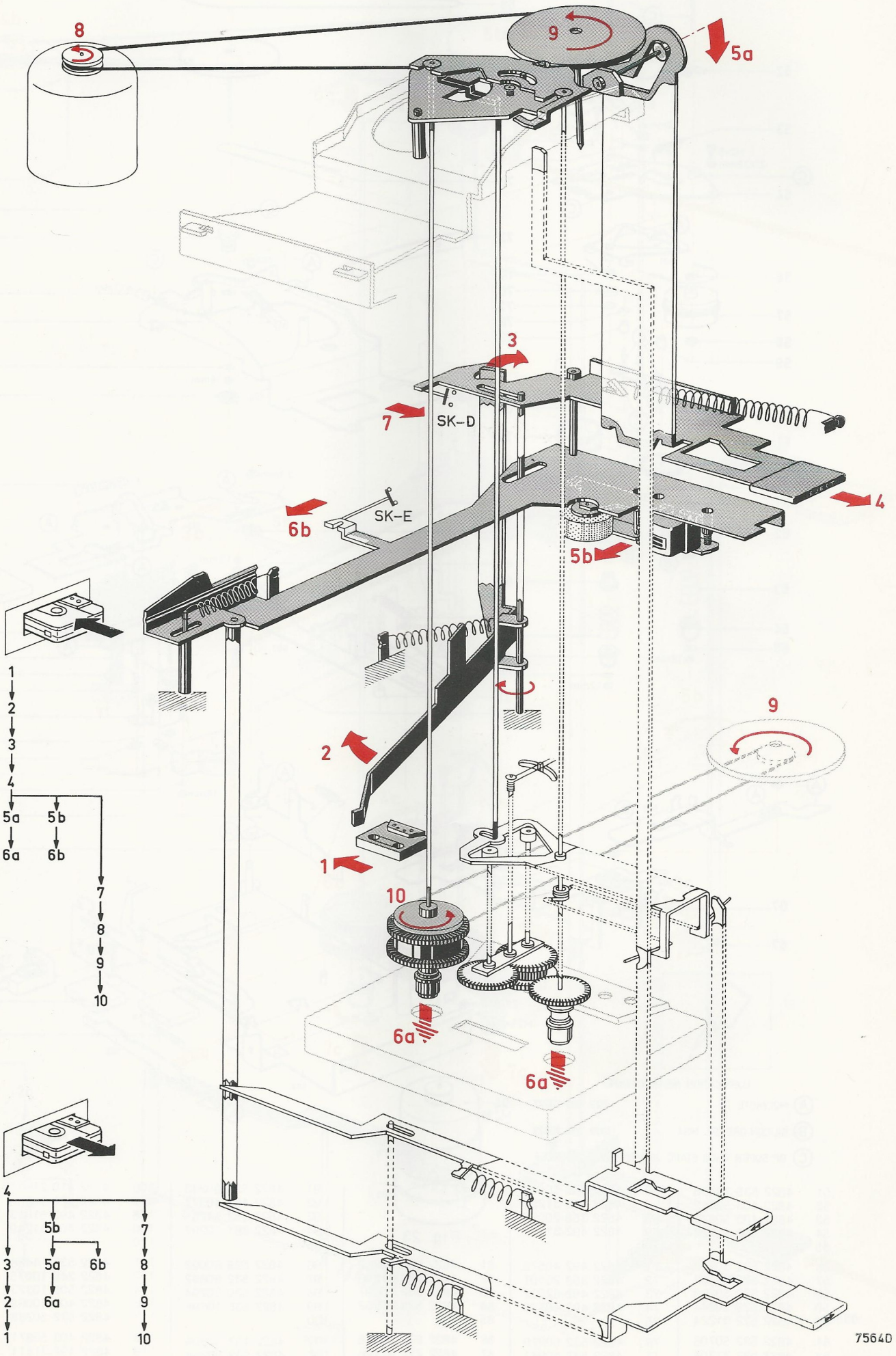

Fig. 6

POSITION FASTWIND ▷▷

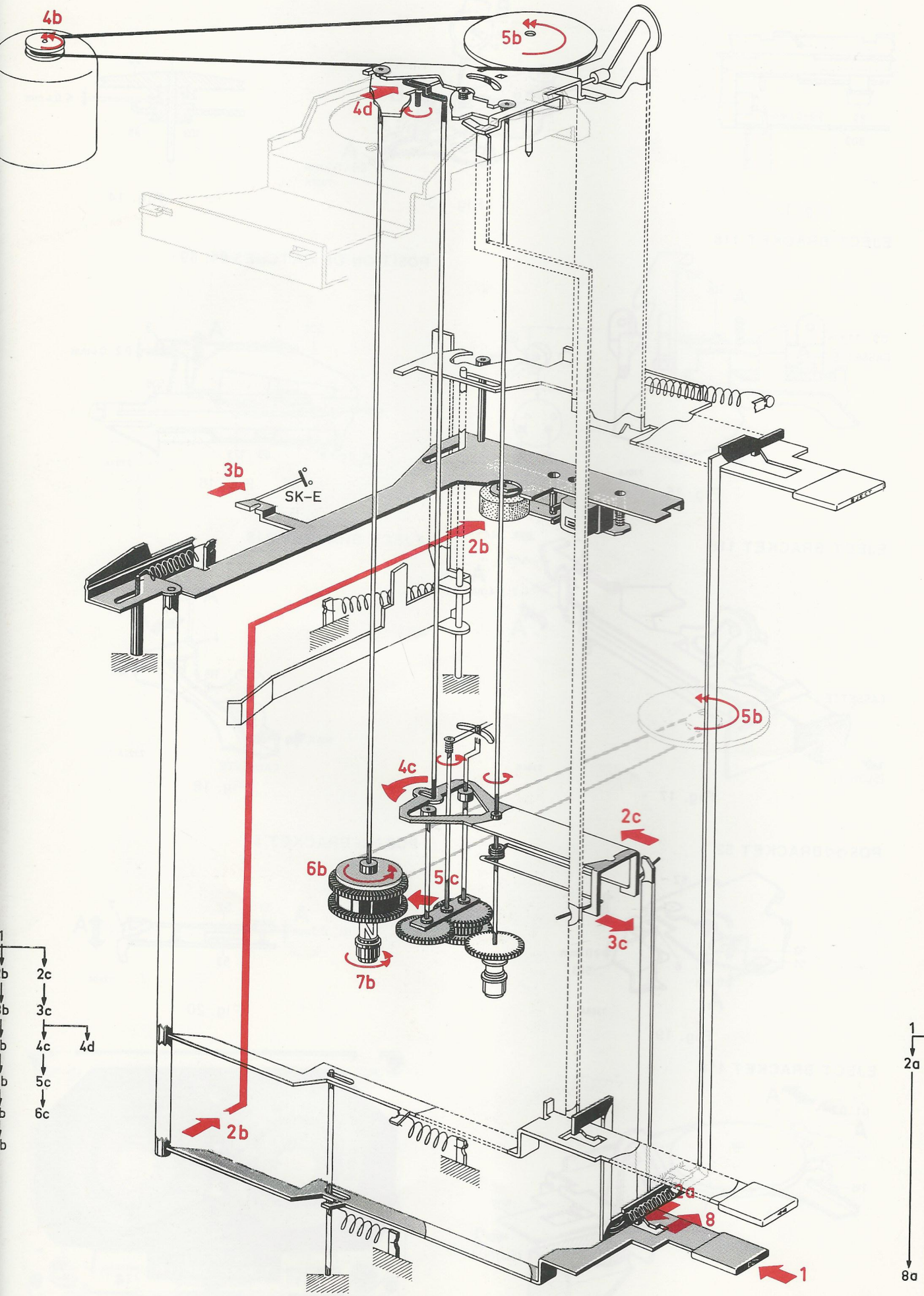

Fig. 7

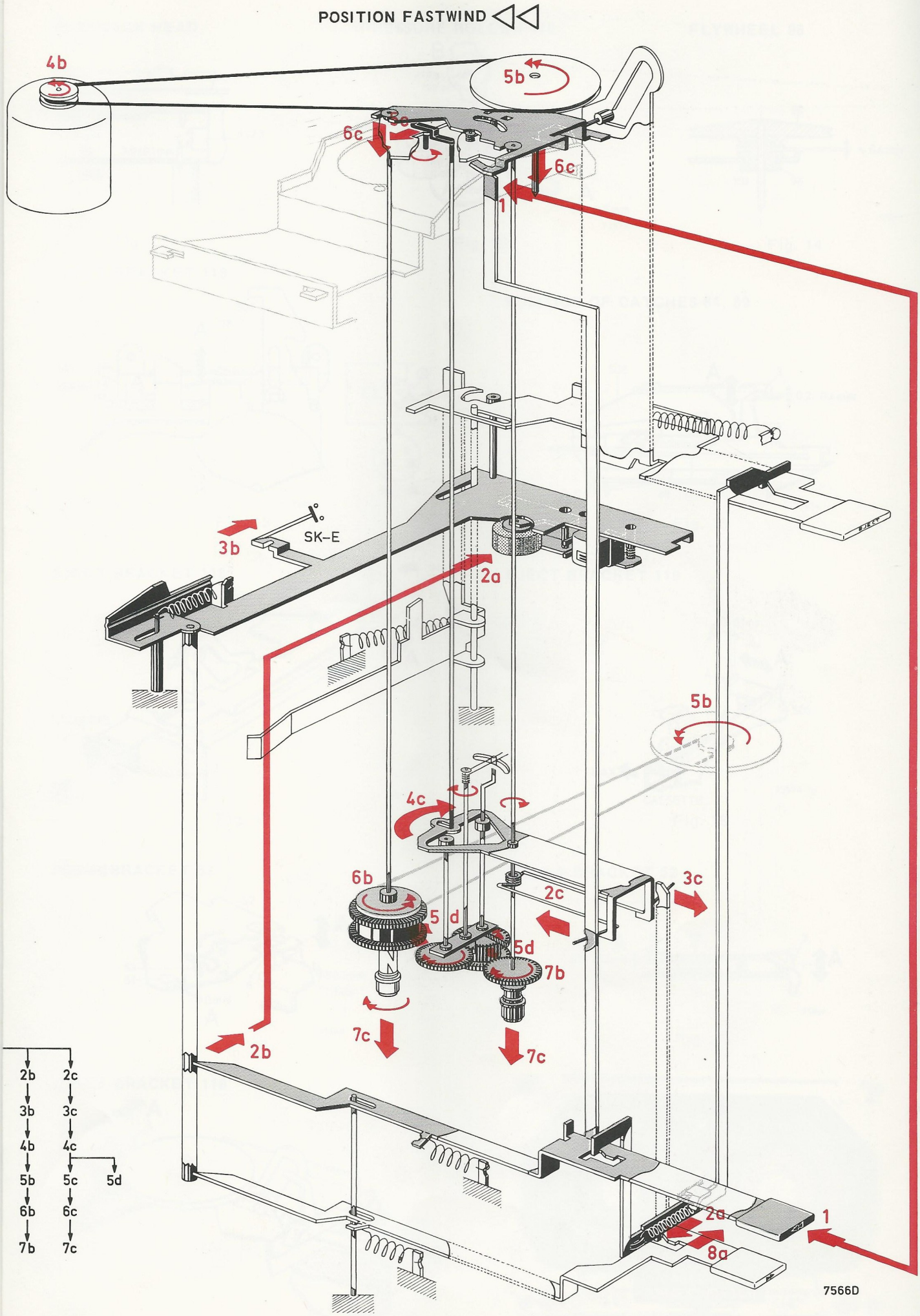

CS56477

Fig. 8

PLAYBACK HEAD

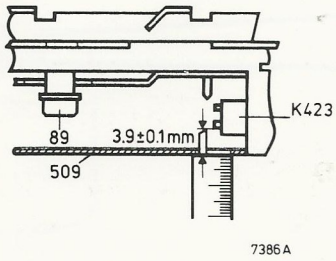

Fig. 12

PRESSURE ROLLER 116

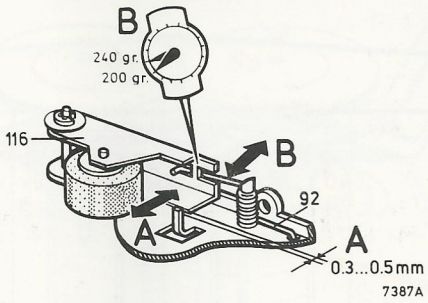

Fig. 13

FLYWHEEL 96

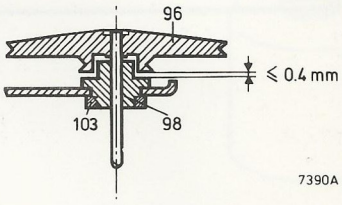

Fig. 14

EJECT BRACKET 118

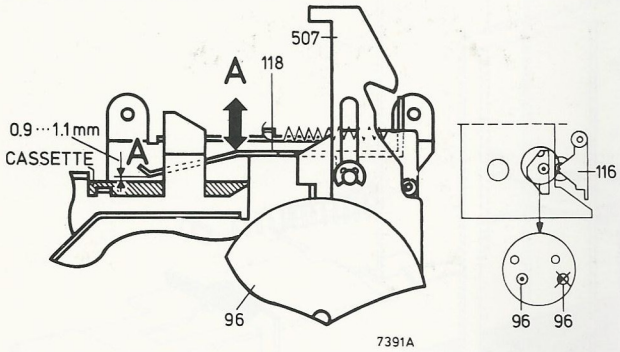

Fig. 15

POSITION OF CATCHES 64, 89

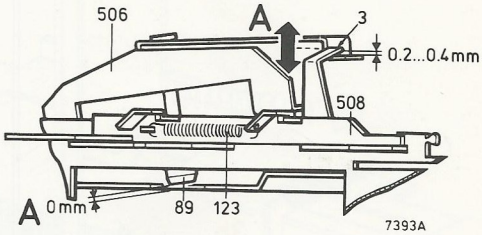

Fig. 16

EJECT BRACKET 118

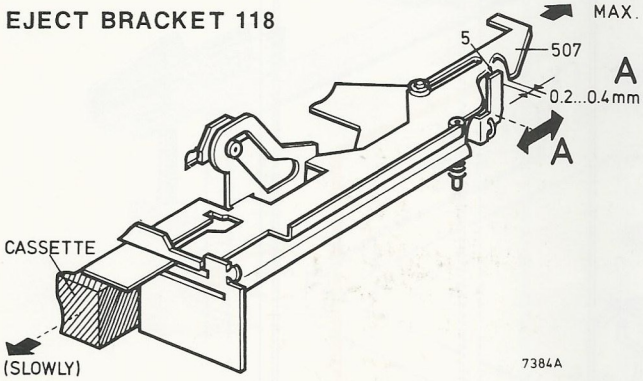

Fig. 17

EJECT BRACKET 118

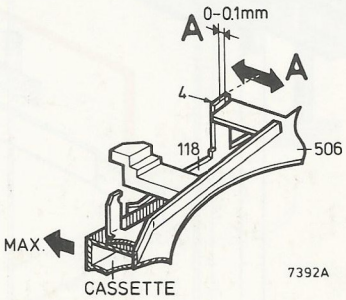

Fig. 18

POS ◁◁ BRACKET 52

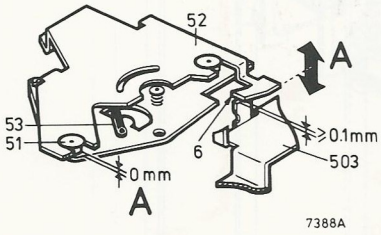

Fig. 19

POS ▷▷ BRACKET 52

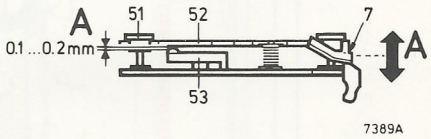

Fig. 20

EJECT BRACKET 118

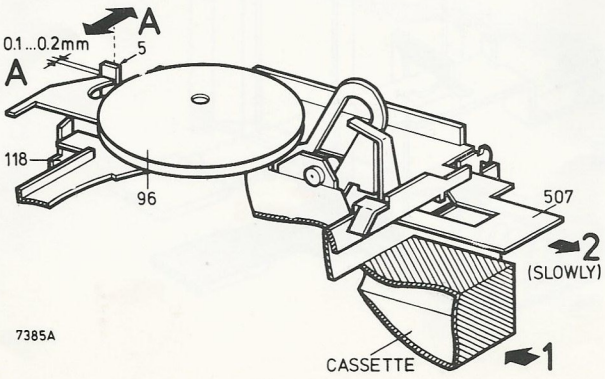

Fig. 21

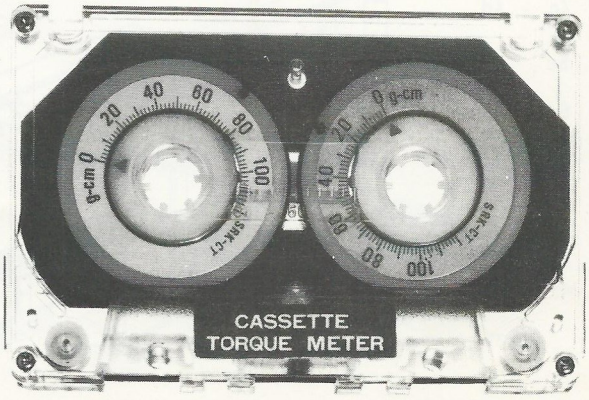

Fig. 22

CS56478

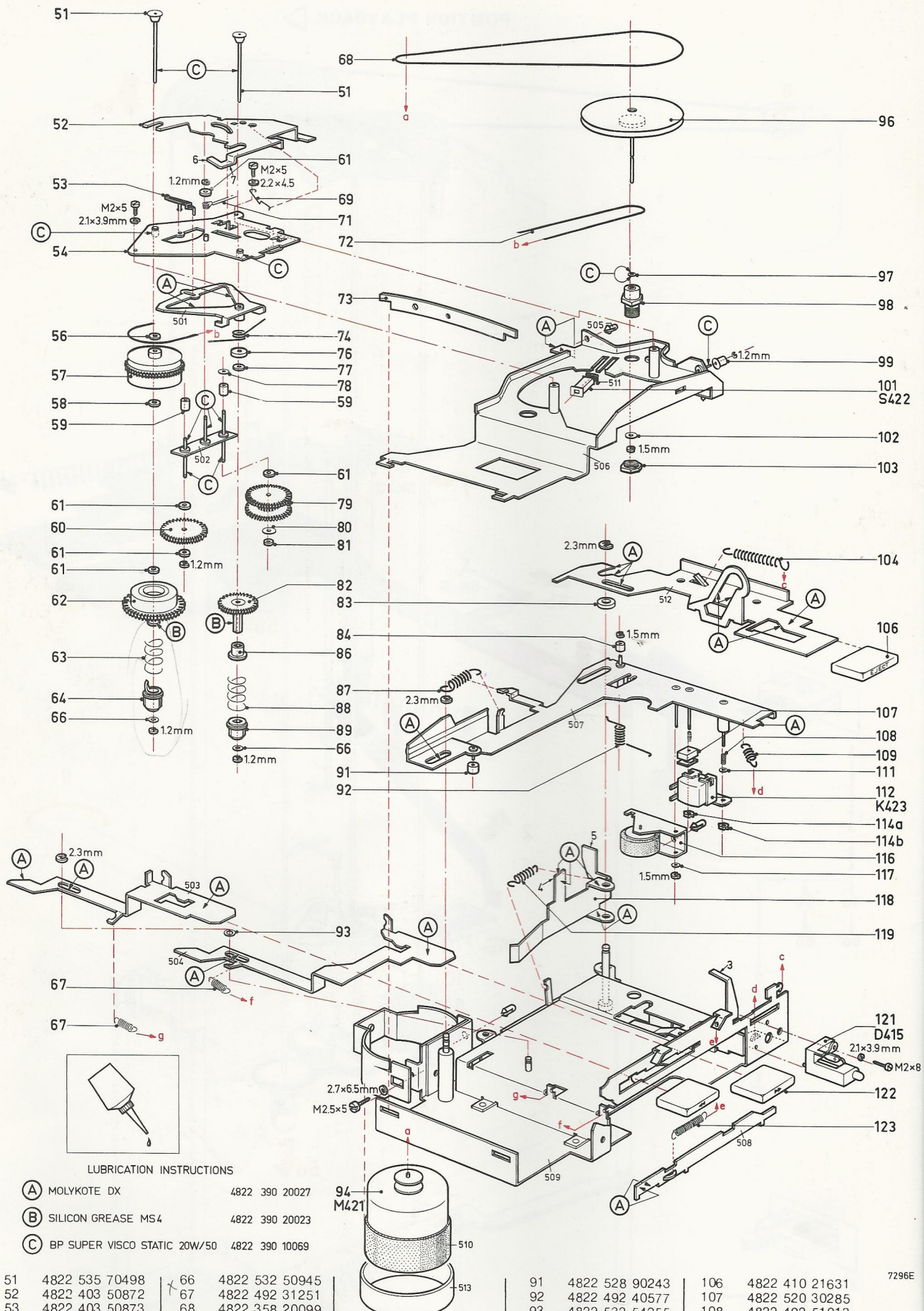

LUBRICATION INSTRUCTIONS

(A) MOLYKOTE DX	4822 390 20027	
(B) SILICON GREASE MS4	4822 390 20023	
(C) BP SUPER VISCO STATIC 20W/50	4822 390 10069	

Fig. 23

7296E

51	4822 535 70498	66	4822 532 50945	81	4822 532 50262	91	4822 528 90243	106	4822 410 21631
52	4822 403 50872	67	4822 492 31251	82	4822 522 31206	92	4822 492 40577	107	4822 520 30285
53	4822 403 50873	68	4822 358 20099	83	4822 532 10691	93	4822 532 54255	108	4822 492 51013
54	4822 403 62022	69	4822 492 31252	84	4822 528 70252	94	4822 361 70297	109	4822 492 31249
55		70		85		95		110	
56	4822 532 50296	71	4822 492 40575	86	4822 532 50978	96	4822 528 60092	111	4822 532 14486
57	4822 522 31203	72	4822 358 20101	87	4822 492 31126	97	4822 532 50692	112	4822 249 10075
58	4822 532 50265	73	4822 492 62022	88	4822 492 51113	98	4822 520 30294	114	4822 505 10323
59	4822 528 90244	74	4822 492 40576	89	4822 528 20192	99	4822 532 10696	116	4822 403 40068
60	4822 522 31224	75		90		100		117	4822 532 50268
61	4822 532 50706	76	4822 532 50979			101	4822 157 50808	118	4822 403 50871
62	4822 522 31204	77	4822 532 50981			102	4822 532 50268	119	4822 492 31311
63	4822 492 51139	78	4822 532 50719			103	4822 505 10556	121	4822 256 80032
64	4822 528 20193	79	4822 522 31205			104	4822 492 31248	122	4822 410 21632
65		80	4822 532 50704			105		123	4822 492 31253

GB

ADJUSTMENTS AND CHECKS RECORDER

1. Adjustment of the playback head

Check height of the head according to Fig. 12. Vertical adjustment of the head by means of nut 114a. If necessary, adapt the horizontal position of block 107, Fig. 23. Secure the nut 114a with lacquer.

Azimuth-adjustment
- Insert test cassette 8945 600 13501 (6300 Hz).
- Connect valve voltmeter to the speaker clamps of the right channel.
- Switch the recorder to "playback".
- Adjust nut 114b to read maximal output voltage (note this reading).
- Connect valve voltmeter to the speaker clamps of the left channel.
- Adjust nut 114b again to read maximal output voltage (Also note this reading).
- Adjust the playback head to the average of the two readings noted, so that one channel output voltage is the same as the other. Secure nut 114b with lacquer.

2. Checking the tape speed

a. Check with the help of the cassette service set 4822 395 30052.

b. Check with the help of the test cassette 8945 600 13501, on which every 4.76 m a signal of 800 Hz is modulated.
   - Insert the test cassette
   - The time between 2 signals should lie between 98 and 102 sec. Is the tape speed too low or irregular, then first check pressure roller force, winding friction and play of the flywheel
   - The speed is adjusted with R497

3. Friction coupling 57, Fig. 22

The friction force on playback should lie between 35 and 50 g. The LH-reel friction on fast rewind should lie between 4 and 8 g.
Non or irregular winding of the tape in the cassette may be caused by:
1. Winding friction too light.
2. LH-reel friction incorrect.
3. Too heavy friction in the cassette.

Sub 1: The friction coupling 57 should be replaced
Sub 2: The lether ring 77 should be replaced.
For the other adjustments see Figs. 13 through 21.

It is advisable to clean the playback head, the pressure roller and the capstan with ethylalcohol after 500 working hours.

NL

INSTELLINGEN EN KONTROLES RECORDER

1. Instelling van de W kop

Kontrole van de kophoogte volgens Fig. 12.
Stel de vertikale stand van de W kop in m.b.v. moertje 114a en verbuig eventueel de horizontale stand van blokje 107, Fig. 23. Lak dan moertje 114a af.

Azimuth-instelling
- Schuif testkassette 8945 600 13501 (6300 Hz) in de recorder.
- Sluit buisvoltmeter aan op luidsprekerklemmen van rechter kanaal.
- Zet recorder in de stand "weergave".
- Stel moertje 114b zodanig in, dat een maximale uitgangsspanning wordt gemeten (Noteer deze waarde !).
- Sluit een buisvoltmeter aan op de luidsprekerklemmen van linkerkanaal.
- Stel moertje 114b weer zodanig in dat een maximale uitgangsspanning wordt gemeten (Noteer ook deze waarde !).
- Stel de W-kop op het gemiddelde van beide genoteerde waarden in, zodat de uitgangsspanning van beide kanalen even groot is. Lak dan moertje 114b af.

2. Kontrole van de bandsnelheid

a. Kontrole met behulp van de kassette service set (4822 395 30052).

b. Kontrole met behulp van testkassette 8945 600 13501, waarop om de 4,76 m een signaal van 800 Hz gemoduleerd is.
   - Schuif de testkassette in de recorder.
   - De tijd tussen 2 signalen moet liggen tussen 98 en 102 sec. Is de bandsnelheid te laag of onregelmatig, dan moet eerst de drukrolkracht, de opspoelfriktie en de speling van het vliegwiel worden gekontroleerd.
   - De snelheid stelt men in met R497.

3. Friktiekoppeling 57, Fig. 22

De friktie kracht bij afspelen moet liggen tussen 35 en 50 gram. De tegenfriktie bij versneld terugspoelen moet liggen tussen 4 en 8 gram.
Niet of onregelmatig opwinden van de tape in de cassette kan veroorzaakt worden door:
1. Te geringe opspoelfriktie.
2. Onjuiste tegenfriktie.
3. Te veel wrijving in de kassette.

In het eerste geval dient men de friktie koppeling 57 te vervangen. In het tweede geval dient men het leren ringetje 77 te vervangen.
Voor de overige instellingen, zie Fig. 13 t/m 21.

Aangeraden wordt, om na ongeveer 500 bedrijfsuren de "W" kop, de drukrol en de toonas te reinigen met ethylalcohol.

F

REGLAGES ET CONTROLES DU MAGNETOPHONE

1. Réglage de la tête reproduction/

Vérifier la hauteur comme indiqué en Fig. 12.
Régler la position verticale par l'écrou 114a et plier le bloc 107 à la verticale, si besoin en est - laquer l'écrou 114a.

Réglage de l'azimuth
- Introduire la cassette d'essai 8945 600 13501 (6300 Hz) dans l'appareil.
- Brancher un voltmètre électronique aux broches du canal de droite du haut-parleur.
- Positionner le magnétophone sur "reproduction".
- Régler l'écrou 114b de façon à mesurer la tension de sortie maximale (prendre note de ce résultat).
- Brancher à présent le voltmètre électronique aux broches du canal de gauche du haut-parleur.
- Régler de nouveau l'écrou 114b de façon à mesurer la tension de sortie maximale (noter).
- Régler maintenant la tête reproduction à la valeur moyenne des deux valeurs notées de façon que la tension de sortie des deux canaux soit égale.
- Ensuite, laquer l'écrou 114b.

2. Vérification de la vitesse de défilement

a. Vérifier avec un "cassette service set" (4822 395 30052)

b. Contrôle à l'aide d'une cassette d'essai (8945 600 13501) contenant un signal modulé de 800 Hz tous les 4,76 m.
   - Disposer la cassette dans le magnétophone.
   - L'intervalle entre deux signaux doit se situer

entre 98 et 102 sec. Lorsque la vitesse est trop basse, il faudra d'abord vérifier si le galet presseur, le couple de friction, le volant etc. fonctionnent sans entraves. Dans la négative on réglera la vitesse de défilement avec R497.

3. Couple de friction 57, Fig. 22.

La force de friction lors du playback doit se situer entre 35 et 50 gr. La contre-friction au bobinage rapide, doit se situer entre 4 et 8 gr. Le non enroulement ou l'enroulement irrégulier de la bande dans la cassette peut être dû à:
1. Une friction insuffisante.
2. Une mauvaise contre-friction.
3. Trop de frottement dans la cassette.

Dans le premier cas, il faudra remplacer le couple de friction 57. Dans le deuxième cas, il faudra remplacer l'anneau de cuir 77.
Voir Fig. 13 à 21 pour ce qui est des autres réglages.

Il est conseillé, après env. 500 heures de fonctionnement, de nettoyer la tête reproduction, le galet presseur et le cabestan à l'alcool éthylique.

D

JUSTIEREN UND KONTROLLIEREN DES RECORDERS

1. Justieren des Wiedergabe-Kopfes

Kontrollieren der Kopfhöhe nach Abb. 12. Senkrechtstellung W-Kopfes mit Mutter 114a justieren und, wenn nötig, die horizontale Lage von Block 17 etwas ändern (siehe Abb. 23). Dann Mutter 114a verlacken.

Justieren des Azimuts
- Testcassette 8945 600 13501 (6300 Hz) in Recorder legen.
- Röhrenvoltmeter an Lautsprecherklemmen des rechten Kanals anschliessen.
- Recorder in Stellung "Wiedergabe" schalten.
- Mutter 114b so justieren, dass eine maximale Ausgangsspannung gemessen wird (Notiere den Wert dieser Spannung !).
- Röhrenvoltmeter an Lautsprecherklemmen des linken Kanals anschliessen.
- Mutter 114b wieder so justieren, dass eine maximale Ausgangsspannung gemessen wird (Notiere auch diesen Wert !).
- Wiedergabe-Kopf auf Durchschnittswert der beiden notierten Werte so justieren dass die Ausgangsspannungen der beiden Kanäle gleich gross sind. Mutter 114b verlacken.

2. Kontrollieren der Bandgeschwindigkeit

a. Mit Cassetten-Service-Satz (4822 395 30052) Bandgeschwindigkeit kontrollieren.

b. Kontrolle mit Testcassette 8945 600 13501, der jede 4,76 m ein 800-Hz-Signal aufmoduliert ist.
   - Cassette in Recorder legen und Gerät in Stellung "Wiedergabe" schalten.
   - Die Zeit zwischen zwei Signalen muss 98-102 Sekunden betragen.
     Sollte die Geschwindigkeit zu niedrig sein, so ist zu kontrollieren, ob die Anpressrolle, die Rutschkupplung, das Schwungrad usw. einwandfrei drehen. Wenn nötig, ist die Bandgeschwindigkeit mit R497 einzustellen.

3. Rutschkupplung 57 (Abb. 22)

Bei Wiedergabe soll die Reibungskraft 35-50 g betragen. Die Gegenreibungskraft bei schnellem Rücklauf soll 4-8 g betragen. Wird das Band in der Cassette nicht oder unregelmässig gewickelt, so kann das auf folgende Ursachen zurückzuführen sein:
1. Zu geringe Reibungskraft beim Aufwickeln.
2. Unrichtige Gegenreibungskraft.
3. Zu viel Reibung in der Cassette.

Im erstgenannten Fall ist Rutschkupplung 57 zu ersetzen. Im zweiten Fall ist Ring 77 zu ersetzen. Für übrige Einstellungen siehe Abbn. 13 und 21.

Es empfiehlt sich, nach ungefähr 500 Betriebsstunden den Wiedergabe-Kopf, die Andruckrolle und die Tonwelle mit Äthylalkohol zu reinigen.

I

REGOLAZIONI E CONTROLLI DEL REGISTRATORE

1. Regolazione della testina di riproduzione

Regolazione della testina di cancelazione.
Verificare l'altezza come indicato nella Fig. 12.
Regolare la posizione verticale tramite il dado 114a e piegare il blocco 107, se necessario, alla verticale mettere della lacca sul dado 114a.

Regolazione dell'azimuth (lato sinistro)
- Introdurre la cassetta campione 8945 600 13501 (6300 Hz) nell'apparecchio.
- Collegare un voltmetro elettronico sulle prese dell'altoparlante del canale di destra.
- Mettere il registratore in posizione "Riproduzione".
- Regolare il dado 114b in modo che la tensione di uscita sia massima (prendere nota di questo risultato).
- Collegare ora il voltmetro elettronico sulla presa dell'altoparlante del canale di sinistra.
- Regolare di nuovo il dado 114b in modo che la tensione d'uscita sia massima (prenderne nota).
- Regolare ora la testina rip. al valore medio dei due valori segnati in modo che la tensione di uscita dei due canali sia uguale.
- Dopo di che mettere della lacca sul dado 114b.

2. Controllo della velocità di avanzamento

a. Controllare con un "cassette service set" (4822 395 30052).

b. Controllare con l'aiuto di una cassette campione (8945 600 13501) che ha un segnale modulato di 800 Hz ogni 4,76 m.
   - Mettere la cassetta nel registratore e porlo in posizione "Riproduzione".
   - L'intervallo tra i 2 segnali deve essere compreso tra 98 e 102 sec. Quando la velocità è troppo bassa, si dovrà verificare se il rullo pressore, la coppia di frizione, il volano etc. non funzionino con difficoltà. In caso negativo, si regolerà la velocità di avanzamento R497.

3. Coppia di frizione 57 (Fig. 22)

La forza di frizione alla riproduzione deve essere fra i 35 e 50 gr. La contra-frizione all'avanzamento rapido deve essere fra i 4 e i 8 gr. In caso di non avvolgimento o di avvolgimento irregolare del nastro nella cassette ci possono tre ragioni:
1. Frizione insufficente.
2. Cattiva contra-frizione.
3. Troppo attrito nella cassette.

Nel primo caso occoviera sostituire la coppia di frizione 57. Nel secondo caso, bisognerà sostituire l'anello di cuoio 77.
Per le altre regolazioni, vedere Fig. 13 e 21.

Consigliamo dopo 500 ore di funzionamento, di pulire la testina di cancellazione, il rullo pressore e il capstan con alcool etilico.

S	422	5205.5603.5604.5206.5204.5207.5605.5208	5209	5210	5211	5212	5001	S
MISC.	D7501 IC7518	D7505.7210.7506	D7502.7503	M421 K423a.b	D7211.7504.TS7510···7514	LA1001 TS7310.7300 VL1002	TS7314.7304 D7312.7302.TS7318.7308.TS7401···7404	MISC.
C	2203···2344 2235.2222···2225 2226.2231···2234 2227.2230 2239 2240 2243.2242 2244 2245.2246.2270.2247.2271.2248.2203.2272 2309 2344 2326···2328.2312···2314 2315.2329.2340 2341 2342 2335.2331							2203···2344 C
	2345···2524 2515 2516 2524.2518 2519 2522 2521 2506.2501 2507.2502 2510 2512.2505 2403 2404 2354 2355 2356 2358.2402.2345.2401							2345···2524
R	3228···3350 3233.3230.3232.3231.3228 3229.3240.3239.3238.3242 3243 3246.3241 3244 3245 3280.3247 3281.3248 3309.3306 3310···3313.3308.3307.3315 3316.3324.3330a.b.c.d.e.f.g 3340 3341.3343.3345.3342.3351.3350.3344.3346···3348							3228···3351 R
	3351···3538 3518.3519 3517 3535 3520 3534 3522.3521.3530.3531.3526···3529.3538.3533 3532 3525 3509···3512 3501···3504.3537.3536.3514.3506 3360 3361...3365.3371.3370.3402.3401.3366···3368							3352···3538

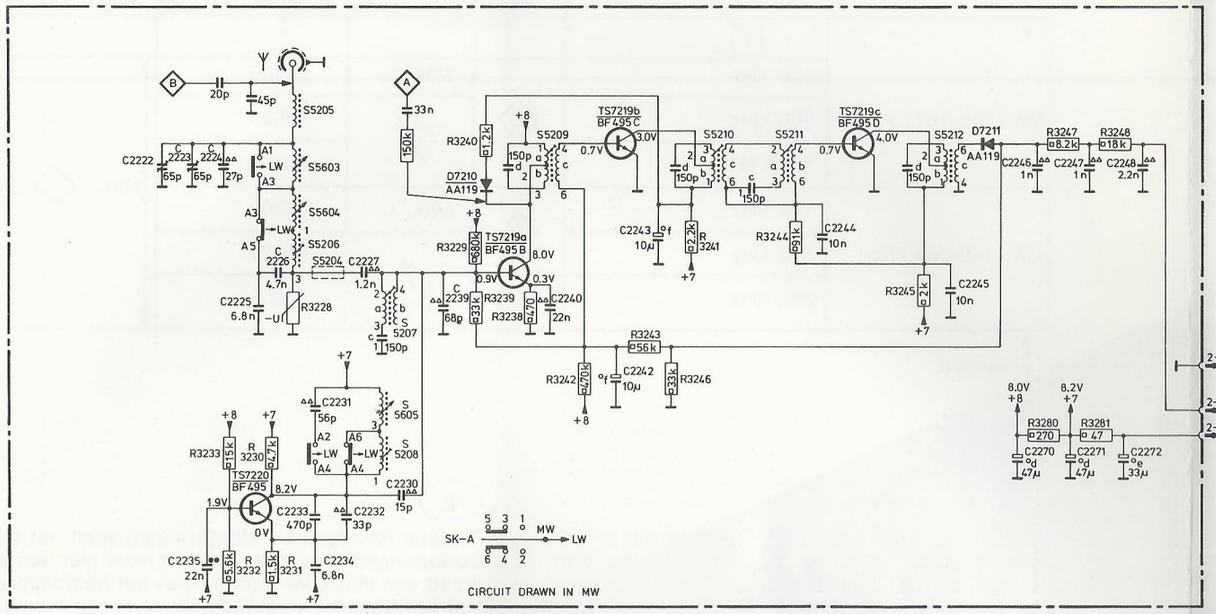

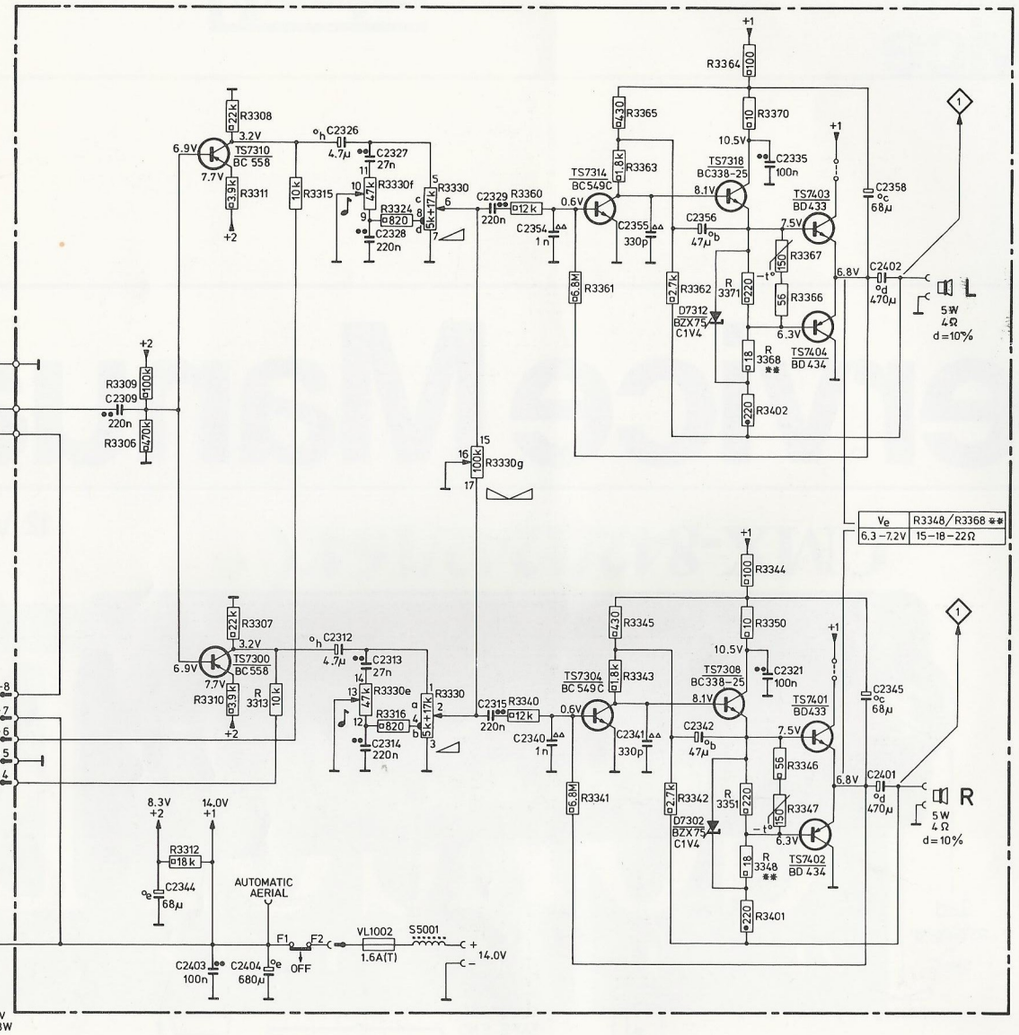

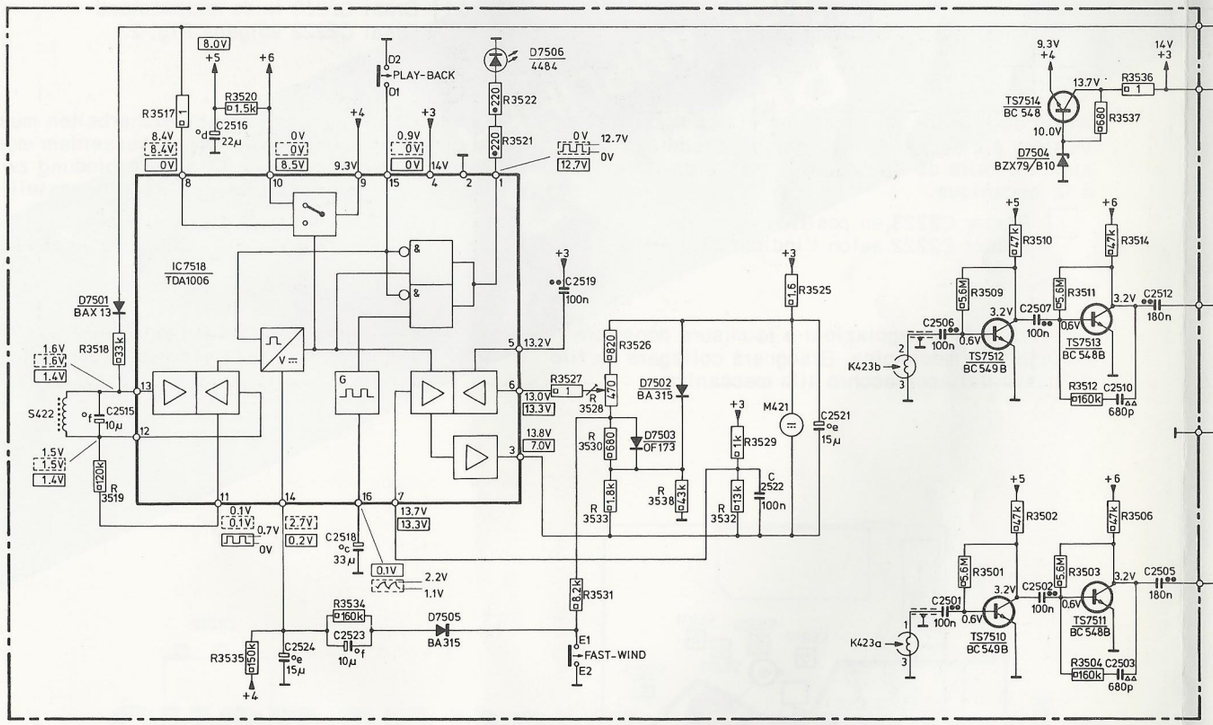

ELECTRONIC VOLTMETER

: CONNECTOR 1 POINT 4 (1-4)

V RADIO

V TAPE-END

V PLAY-BLACK

CARBON RESISTOR E24 SERIES 0.125W } < 1MΩ 5% / > 1MΩ 10%

CARBON RESISTOR E12 SERIES 0.25W

PLATE CERAMIC CAPACITOR

FLAT FOIL POLYESTER CAPACITOR

MINIATURE ELECTROLYTIC CAPACITOR

* b = 4 V, c = 6.3V, d = 10V, e = 16V, f = 25V, g = 63V

8508E7

CS56410

MISC.	7501–7518	TS7510 TS7512.CONN. 2 TS7511.7513 SK–D.D7504.TS7514.D7501.7505.IC7518.SK–E D7503.7502	MISC.
C	2501···2524	2502.2501 2506.2503.2507.2510.2516 2505.2512.2518.2524.2523 2515 2519 2522 2521	C
R	3501···3529	3501 3502.3504.3503.3509···3512.3514.3506.3520···3522 3518 3519.3517 3529.3527.3525.3528 3526	R
	3530···3538	3534 3535 3537 3536 3531.3532.3530.3538.3533	

PRINT 5

PRINT 3+4

MISC.	C	R
7300 ··· 7404	2309 ··· 2404	3306 ··· 3402
CONN.1		
	2309	
	2402	
		3306
		3402
TS7300		3401
	2401	3312
		3309
		3310
	2403	
TS7310	2344	3364
		3368
	2335	
TS7404		3366
TS7403		3370
		3371
		3313
		3365
		3362
		3311
D7312		3363
	2358	3367
	2356	
	2404	
TS7318		3342
		3315
		3345
		3347
		3348
		3307
TS7402	2342	3308
TS7401		
	2345	3351
	2321	
		3341
D7302		3346
SK–F		
TS7308		3350
	2341	3343
		3361
		3340
TS7304		
TS7314	2315	
	2354	
	2328	3316
	2340	3360
	2355	
	2312	
	2314	3324
		3344
	2329	
	2313	
	2327	
	2326	
		3330
MISC.	C	R

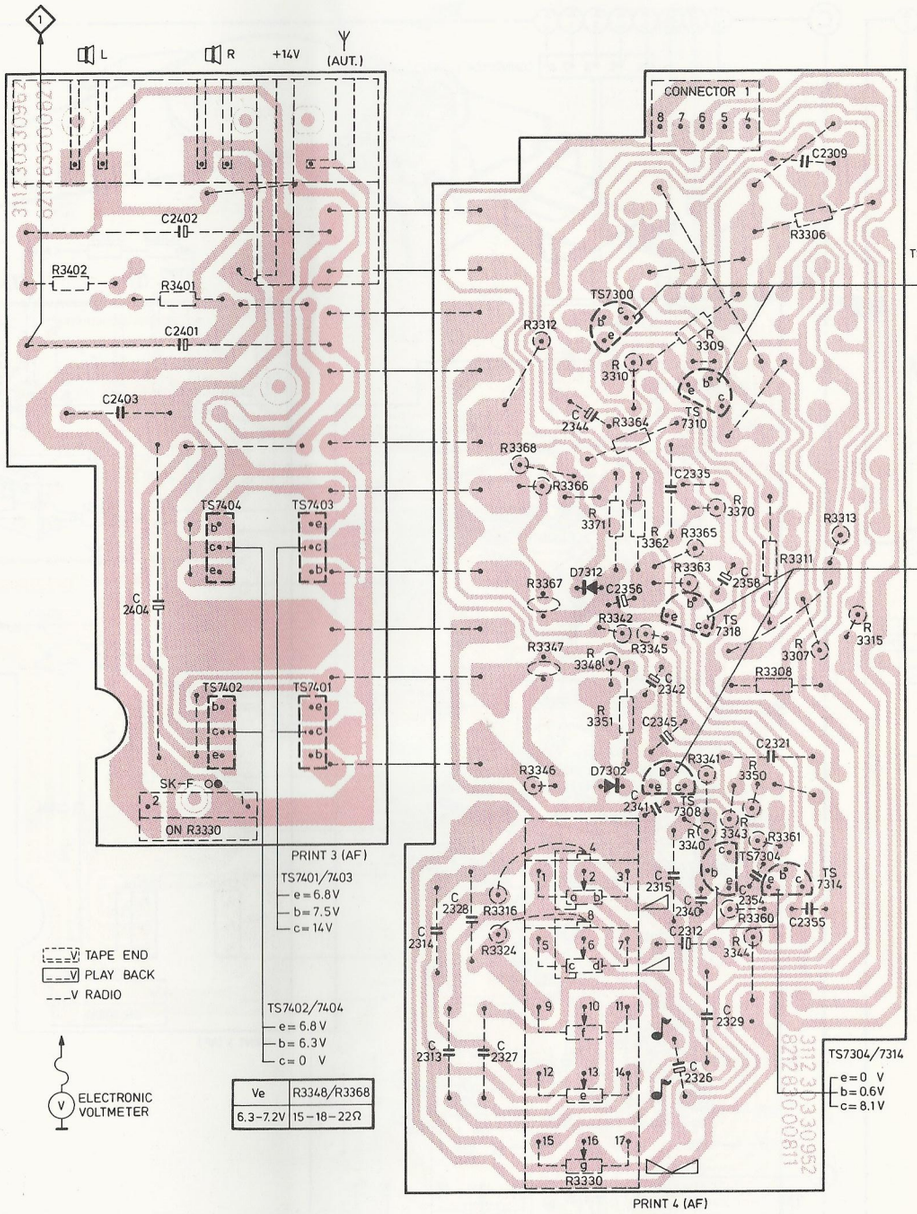

Ve	R3348/R3368
6.3–7.2V	15–18–22Ω

TAPE END
PLAY BACK
RADIO

ELECTRONIC VOLTMETER

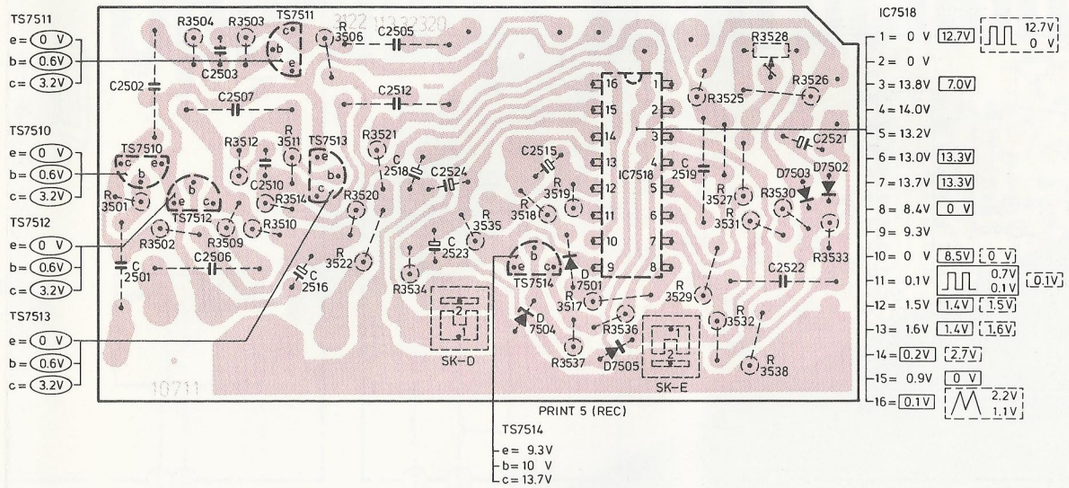

S	5204···5212	5212	5211	5210	5209	5207	5204.5208	5206	5205	S
MISC.	7210···7220	TS7219c.D7211.CONN. 2		TS7219b	D7210.TS7219a		TS7220.SK–A			MISC
C	2222···2272	2245	2248.2246.2272.2247.2244.2243.2242		2223	2271.2222.2240.2239.2270.2227.2230···2235		2226.2225.2224		C
R	3228···3281	3246.3244	3247.3245.3248.3243.3281.3241.3242.3240		3239.3238	3229	3280.3230.3233.3232.3231	3228		R

PRINT 2

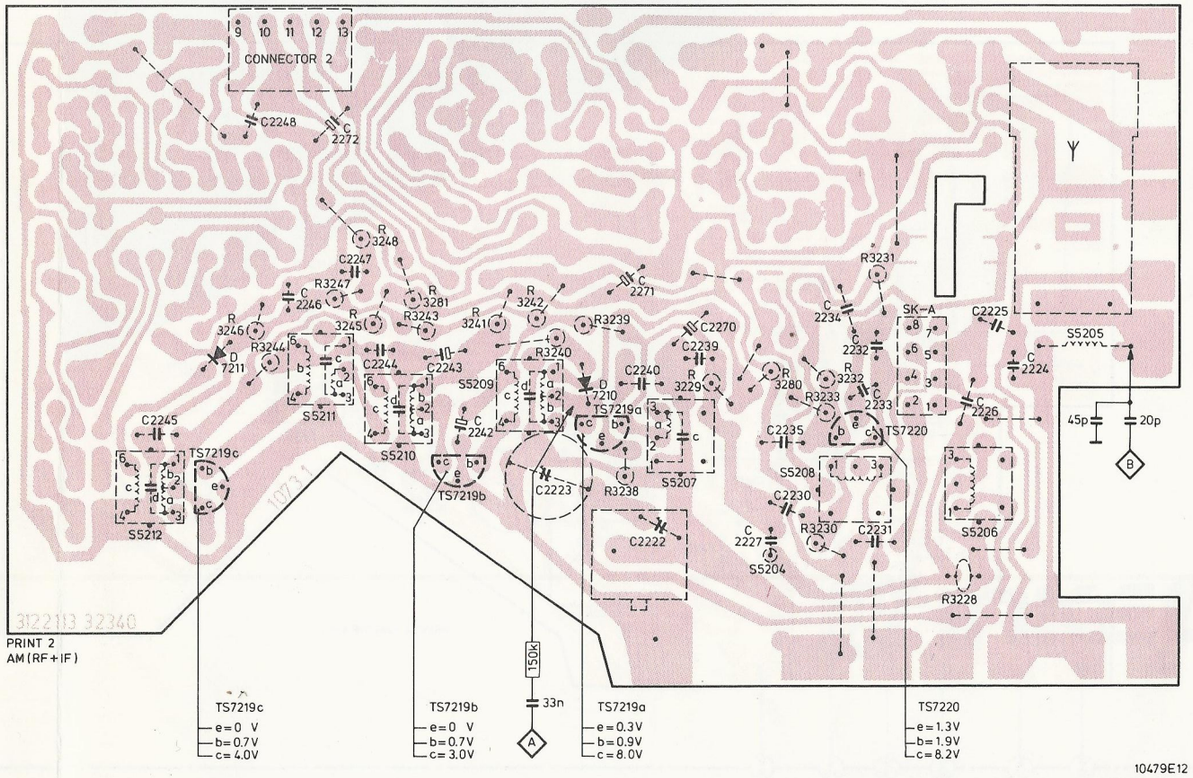

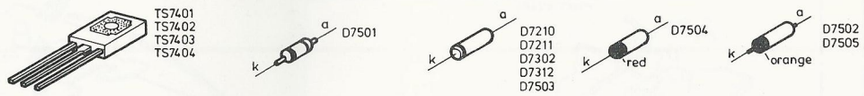

10479E12

CS56411

MISC	D7502.7503	SK-E.IC7518.D7505.7501.TS7514.D7504.SK-D																						MISC.
C	2501···2524	2521.2522				2519				2515				2524.2518.2523.2505.2512				2516.2510.2507.2503.2506.2501						C
R	3501···3529	3526.3528.3527.3525.3529					3517		3519	3518					3506.3520···3522.3514.3509···3512.3501···3504									R
	3530···3538	3533.3530.3538.3532.3531					3536		3537				3535		3534									

UNIT A+B

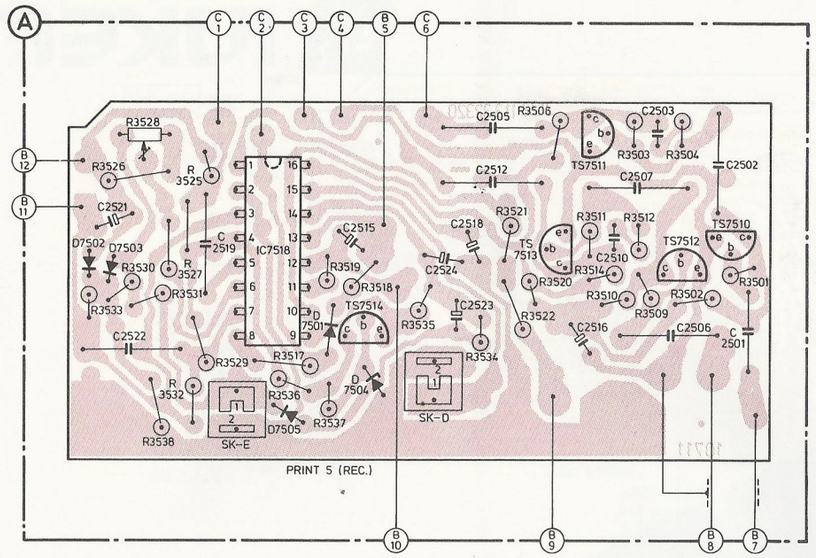

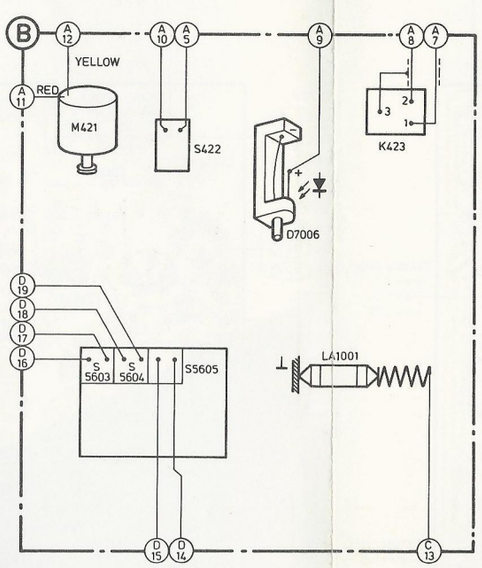

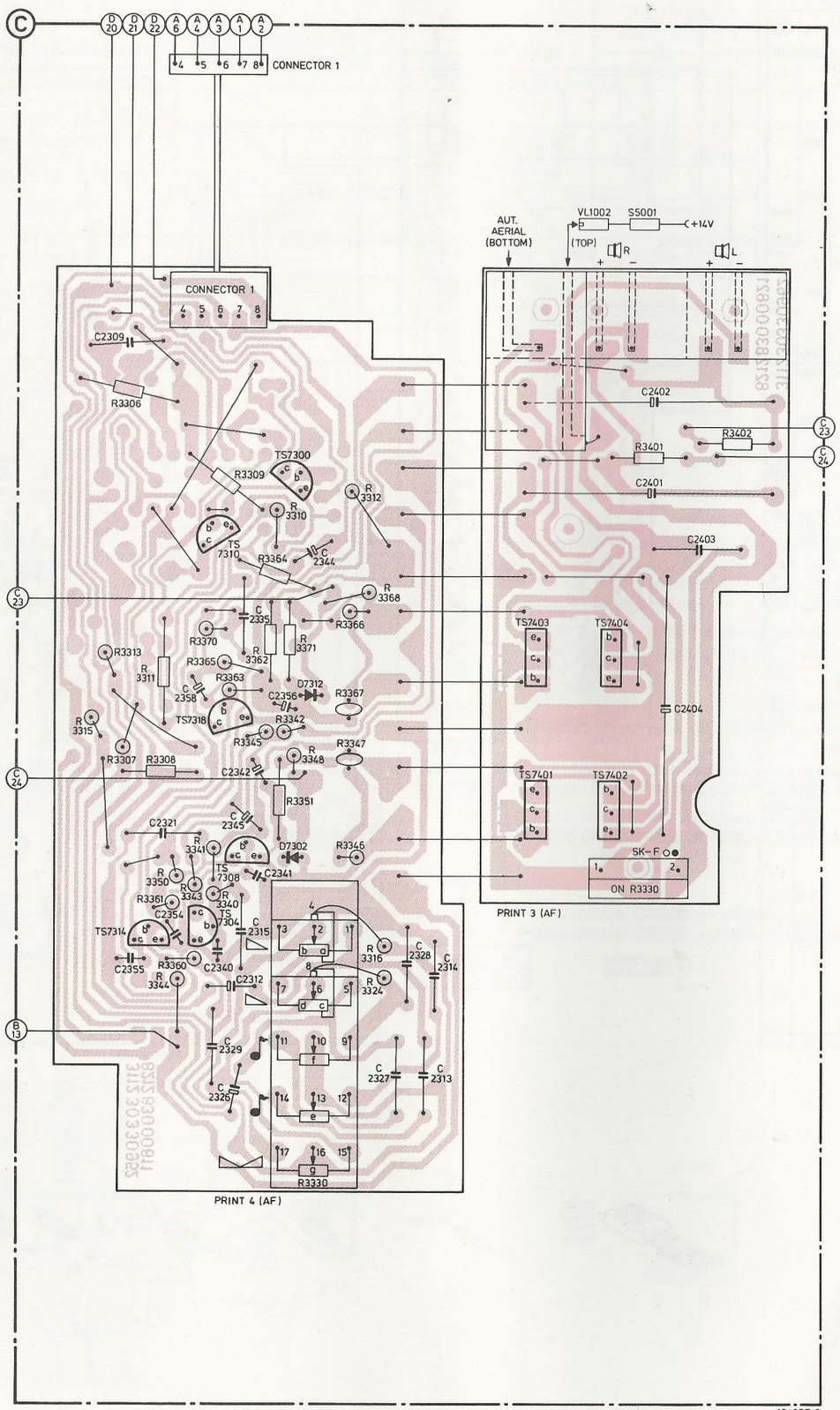

S	5204···5212	5205				5206						5208.5204			5207					5209		5210	5211			5212	S
MISC.	7210···7220									SK-A TS7220						TS7219a D7210				TS7219b				CONN. 2 TS7219c D7211			MISC.
C	2222···2272						2224···2226				2231···2234.2230.2235.2227 2239.2270.2240.2222.2271							2223		2243.2242			2244.2247	2272	2246.2248		2245	C
R	3228···3281							3228					3230···3233	3280		3229	3238	3239	3240	3242	3241	3243	3281		3245.3248.3247.3244	3246		R

UNIT D

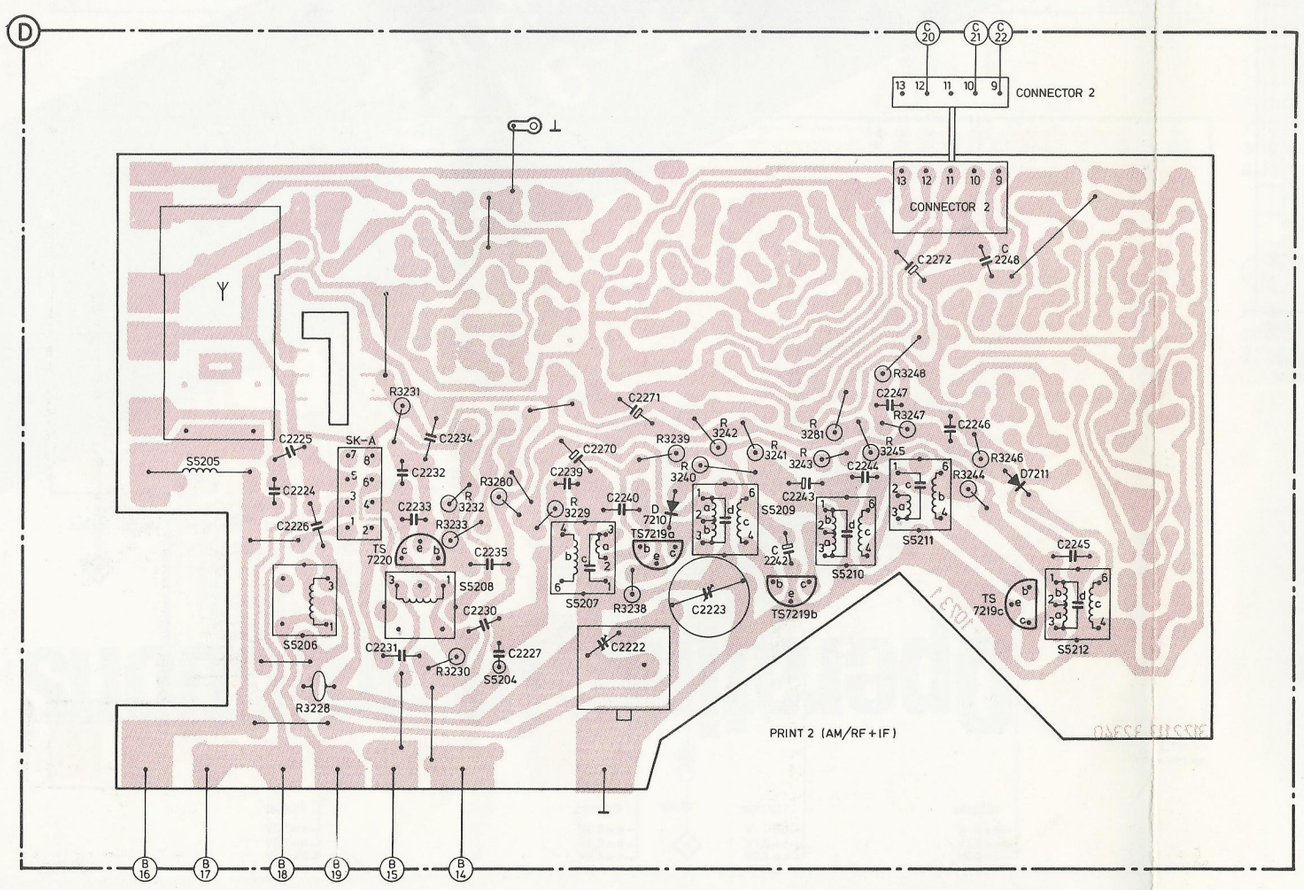

UNIT C

R	C	MISC.
3306	2309	
···	···	
3402	2404	CONN. 1
		VL1002
		S5001
	2309	
	2402	
3306		
3402		
3401		TS7300
3309	2401	
3312		
3310		
	2403	
3364	2344	TS7310
3368		
3366	2335	TS7403
3370		TS7404
3371		
3313		
3362		
3365		
3363		D7312
3367	2356	
3311	2358	
	2404	
3342		TS7318
3315		
3345		
3347		
3348		
3307		
3308	2342	TS7401
		TS7402
3351		
	2345	
	2321	
3346		D7302
3341		SK-F
	2341	TS7308
3350		
3343		
3361		
3340	2354	TS7304
	2315	TS7314
	2328	
3316	2355	
3360	2340	
	2314	
3324	2312	
3344		
	2329	
	2327	
	2313	
	2326	
3330		
R	C	MISC.

10480E12

CS56412

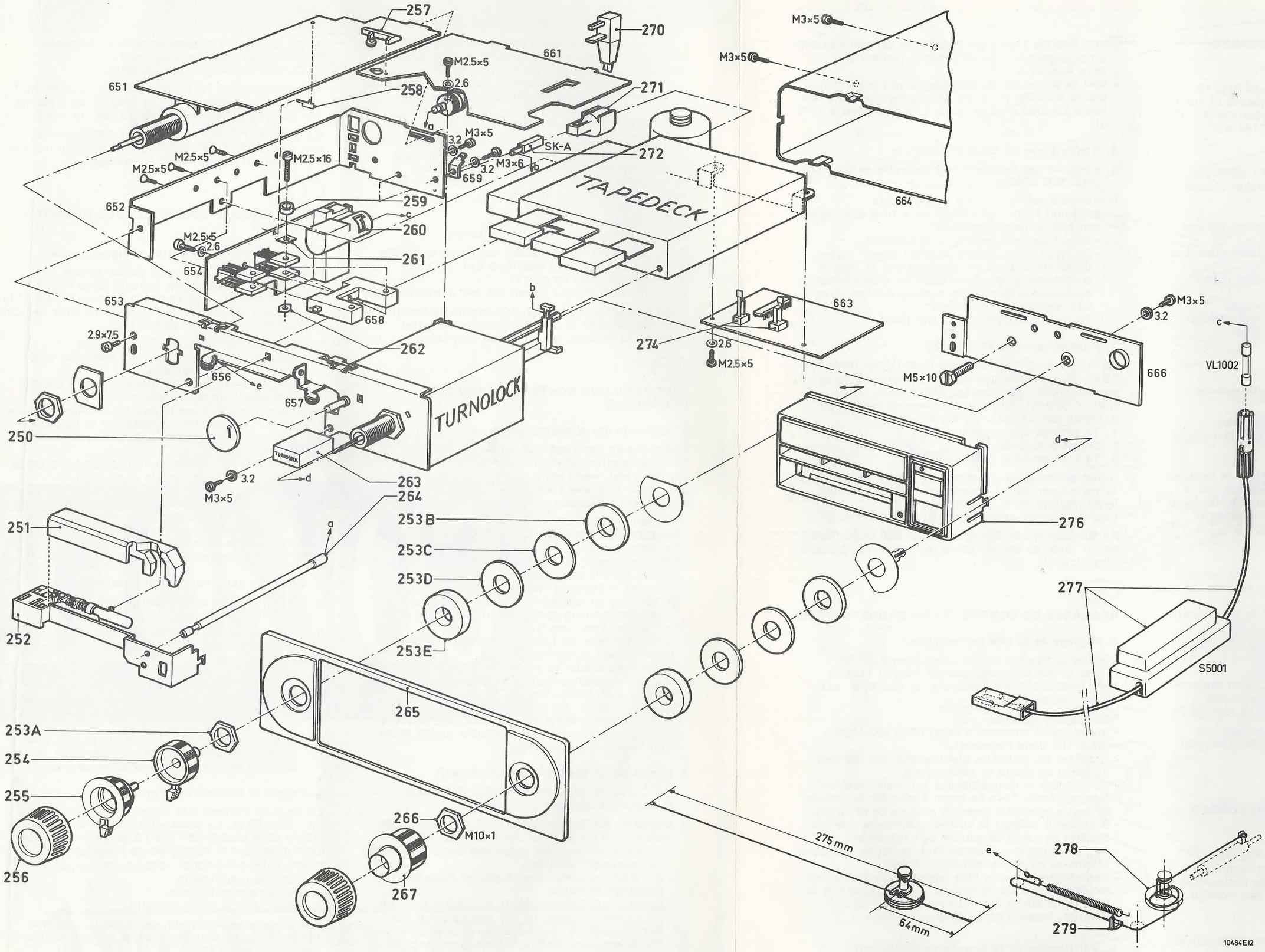

250/80/85/79L	4822 532 60629
250/84/79R	4822 532 60631
251	4822 331 10031
252	4822 466 70302
253	4822 310 10079
254	4822 411 50406
255	4822 411 50405
256	4822 413 40674
257	4822 404 20213
258	4822 535 90995
259	4822 532 50989
260	4822 267 40234
261	5322 255 44057
262	4822 505 10562
263	4822 410 21733
264	4822 535 90997
265	4822 460 10378
266	4822 505 10546
267	4822 413 40675
270	4822 267 40235
271	4822 267 30266
272	4822 278 20323
274	4822 278 20324
276	4822 423 40441
277	4822 321 20339
278	4822 528 80621
279	4822 450 80451

CS56413

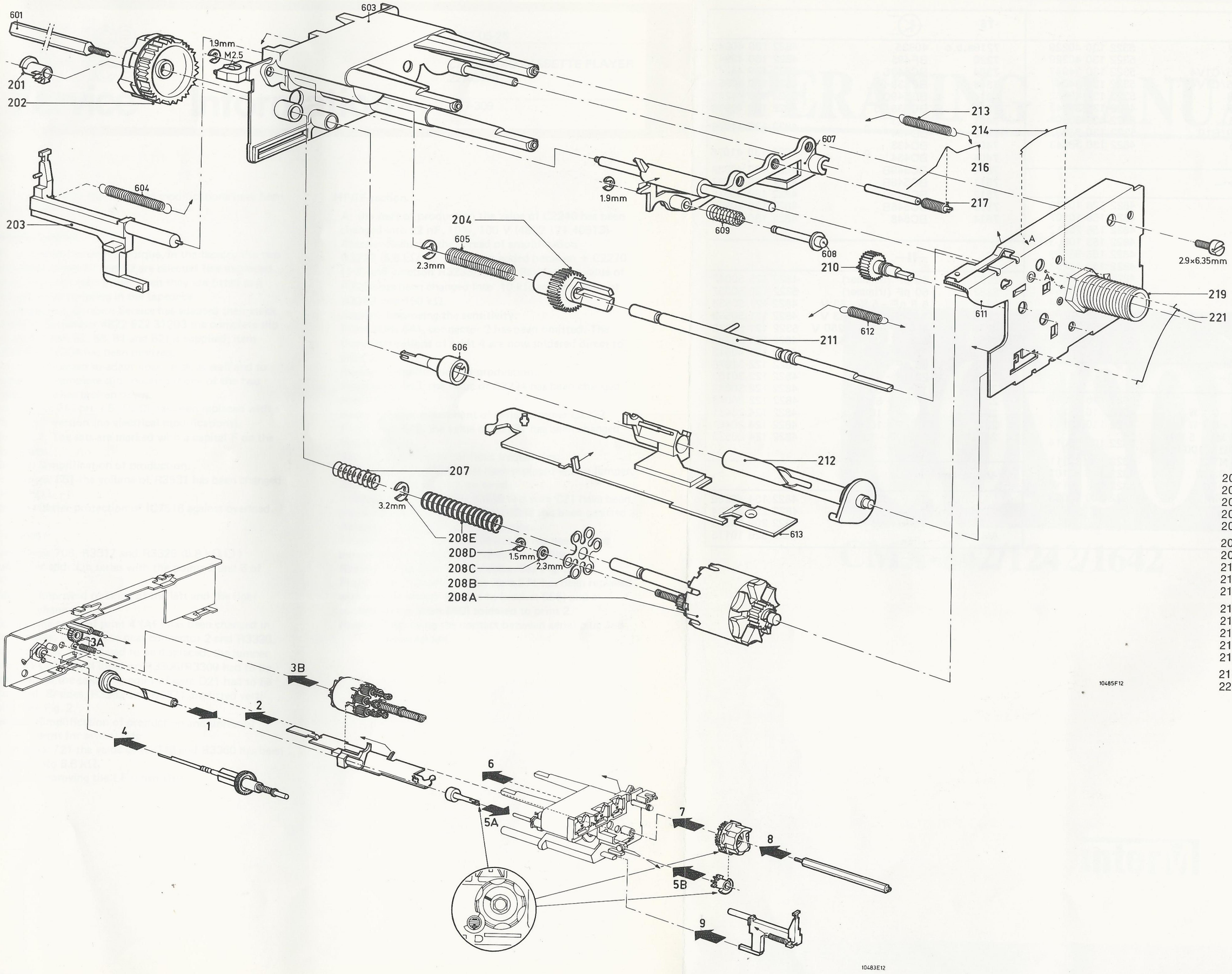

201	4822 522 3 221
202	4822 691 10226
203	4822 404 20211
204	4822 522 31009
207	4822 492 51129
208A-E	4822 528 40196
209	4822 492 62048
210	4822 522 31219
211	4822 522 31218
212	4822 535 90996
213	4822 492 31278
214	4822 492 62045
216	4822 492 62047
217	4822 526 10115
218	4822 526 10109
219	4822 532 20653
221	4822 492 62046

1977-05-26

CAR RADIO CASSETTE PLAYER
22AC460

A77-309

During production the following modifications have been introduced:

Recorder section

. To be sure of the correct torque, in the factory the two gearwheel assies 57 and 62 are selected (see exploded view) to match each other. Then they are fitted as a complete slip coupling in the tapedeck.
Consequently, Concern Service has adapted their stock Under code number 4822 522 31203 the complete slip coupling (item 57, 58, 61 and 62) is supplied; item 4822 522 31204 has been omitted.
You are requested to adapt your stock as well and to replace the complete slip coupling if one of the two components has broken down.

. From week 646 print 5 (REC) has been replaced with a "fall-pipe" version (no electrical modifications).
See Fig. 1. The sets are marked with a capital F on the type plate.
Reason: Simplification of production.

. From week 651 the volume of R3531 has been changed into 10 kΩ.
Reason: Better protection of IC7518 against overload.

LF-section

. From week 708, R3317 and R3325 (6.8 kΩ □) have been added in series with the points 2 and 6 of R3330.
Reason: Improved tracking of the left and the right channel.
Besides, the track of print 4 (AF) has been changed in some places, for instance near connector 2 and R3330. Consequently, C2309 had to be displaced, the jumper between C2309 and junction R3306/R3309 had to be omitted and the soldering point of wire D21 had to be displaced. Besides, R3362 and R3371 are fitted vertically. See Fig. 2.
Reason: Simplification of production and universal print for several sets

. From week 721 the value of R3340 and R3360 has been changed into 6.8 kΩ.
Reason: Improving the LF sensitivity.

HF/IF-section

. At the start of production the value of C2240 has been changed into 22 nF, 10%, 100 V (4822 121 40513)
Reason: Reducing the spread of amplification
R3279 (5.6 kΩ □) has been added between + C2270 (+8) and junction R3233/R3242. Besides, the value of R3233 has been changed into 10 kΩ and the value of R3242 into 150 kΩ.
Reason: Improving the sensitivity.

. From week 641, connector 2 has been omitted. The three connections of print 4 are now soldered direct to print 2.
Reason: Simplification of production.

. From week 643, the value of C2224 has been changed into 47 pF.
Reason: Easier adjustment of aerial trimmer C2222.

. From week 649, the value of C2231 has been changed into 47 pF.
Reason: Adhering to the limit frequencies.

. From week 704, S5205 has been replaced with a jumper.
Reason: S5205 was not required.

. From week 706, C2248, R3248 and wire C21 have been displaced, and the jumper near C2248 has been omitted.
Reason: Simplification of production.

. From week 711, R3249 (150 kΩ □) has been added between junction C2248/R3248 and C2309
Reason: Adaptation of sensitivity. See Fig. 3.

. From week 713 aerial socket item 271 has been replaced with a metal socket (riveted to bracket 666) and a contact spring (item 660) soldered to print 2.
Reason: Improving the contact between aerial plug and aerial socket.

Printed in the Netherlands

MISC	TS7510···7513	D7504	TS7514.SK-D.D7501.7505.IC7518	SK-E	D7503.7502
C	2503 2502 2510 2501 2505···2507.2512.2516.2524.2523 2515 2518			2519 2522 2521	
R	3501···3504.3506.3509···3512.3520.3514. 3522.3534.3535.3521.3537.3518 3519			3525 2528···3532 3538 3526 3533	

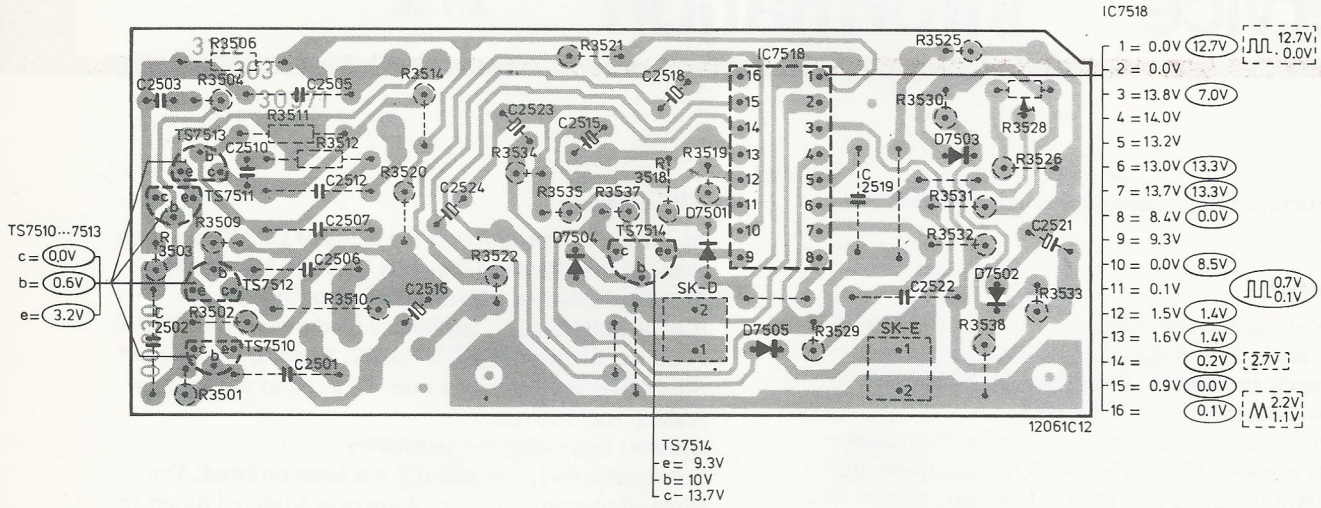

Fig. 1a

MISC	D7502.7503 SK-E	IC7518 D7505.7501 SK-D TS7514	D7504	TS7510···7513
C	2521 2519 2522	2518 2515 2523	2524.2516.2501.2507.2512.2506.2505.2510.2502.2503	
R	3528. 3526 3538 3525 3530···3533 3529	3519 3518 3537 3521 3535 3534 3522 3514 3520	3509···3512 3506 3501···3504	

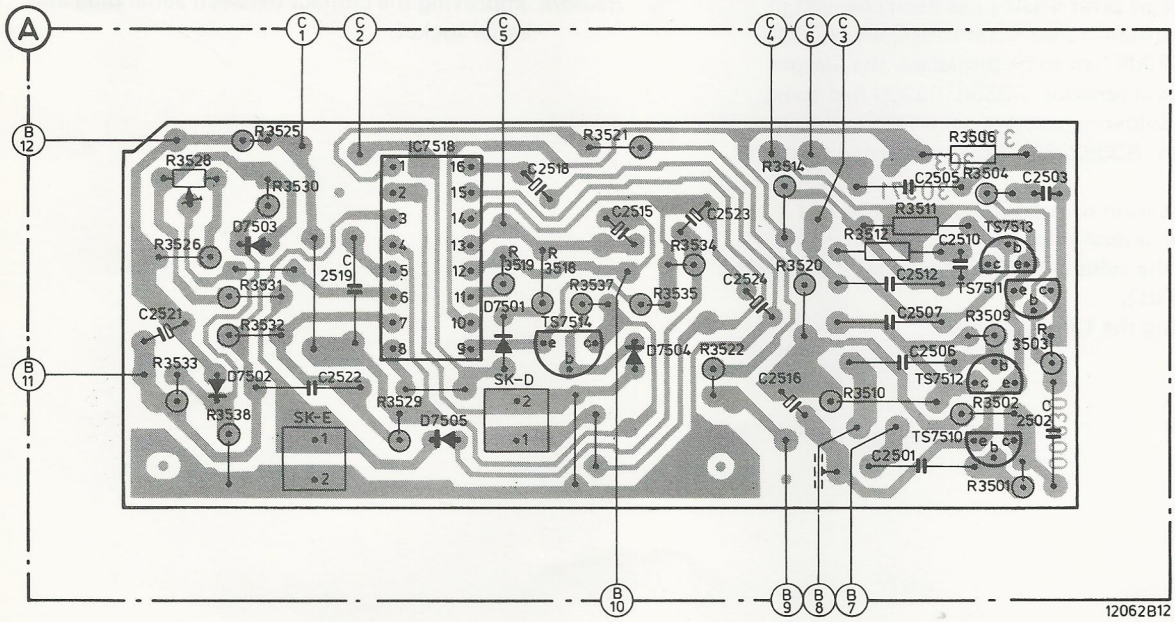

Fig. 1b

MISC	C	R
CONN. 2		
	2309	
		3306
	2402	
		3402
		3401
TS7300		3309
	2401	3312
		3310
TS7310	2403	
	2344	
		3364
		3368
		3366
	2335	
		3370
		3371
TS7403		3313
TS7404		3365
		3311
D7312	2358	3362
	2404	3363
TS7318	2356	3367
		3315
		3342
		3345
		3307
		3348
	2342	3347
		3351
		3308
TS7401		
TS7402	2345	
	2321	
TS7308		3341
D7302		3343
		3346
SK-F	2341	3350
		3340
		3361
TS7304	2315	
	2354	3330
TS7314	2328	3316
	2340	
	2355	3360
	2314	3344
		3324
	2312	3317
	2329	3325
	2313	
	2327	
	2326	

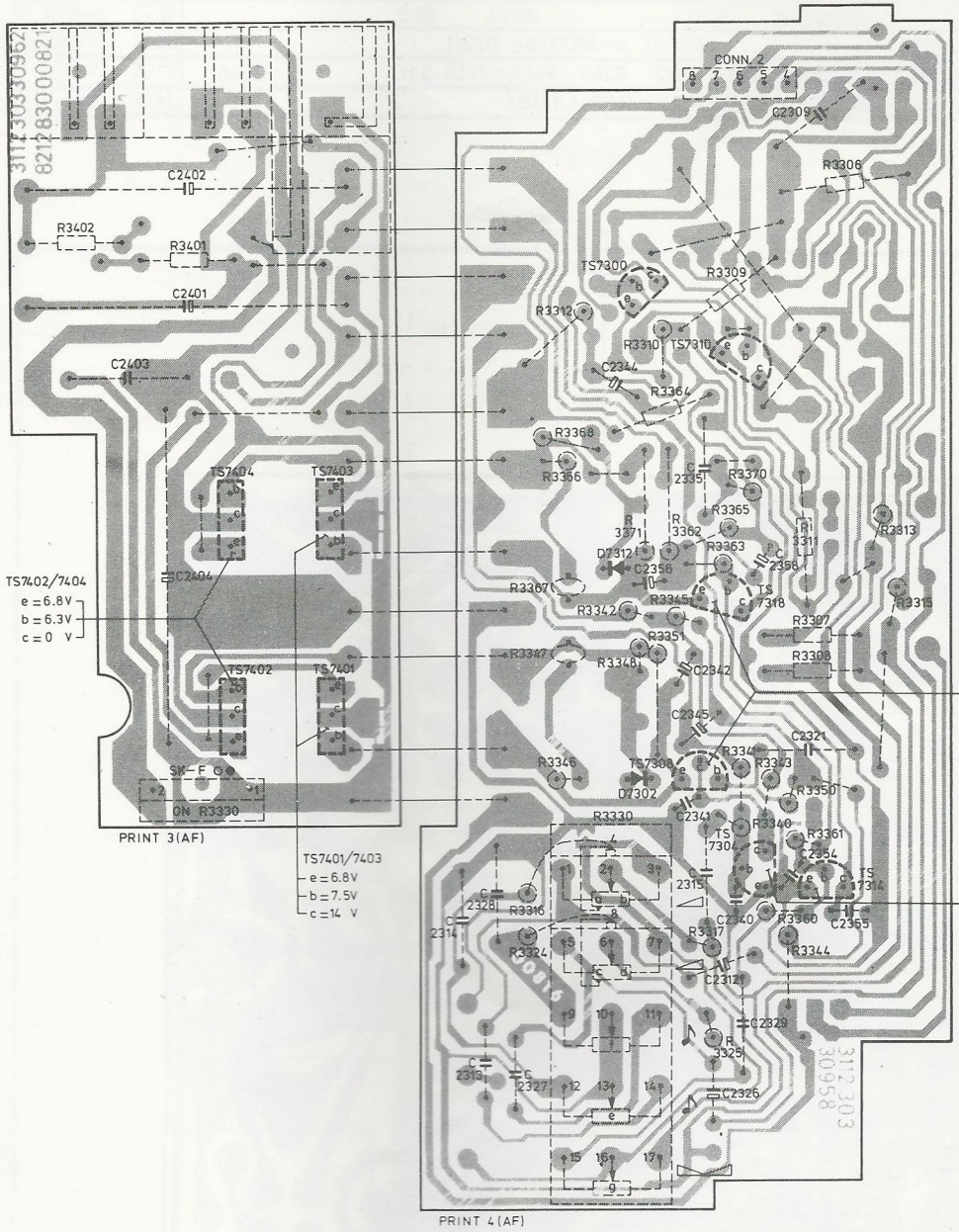

Fig. 2a

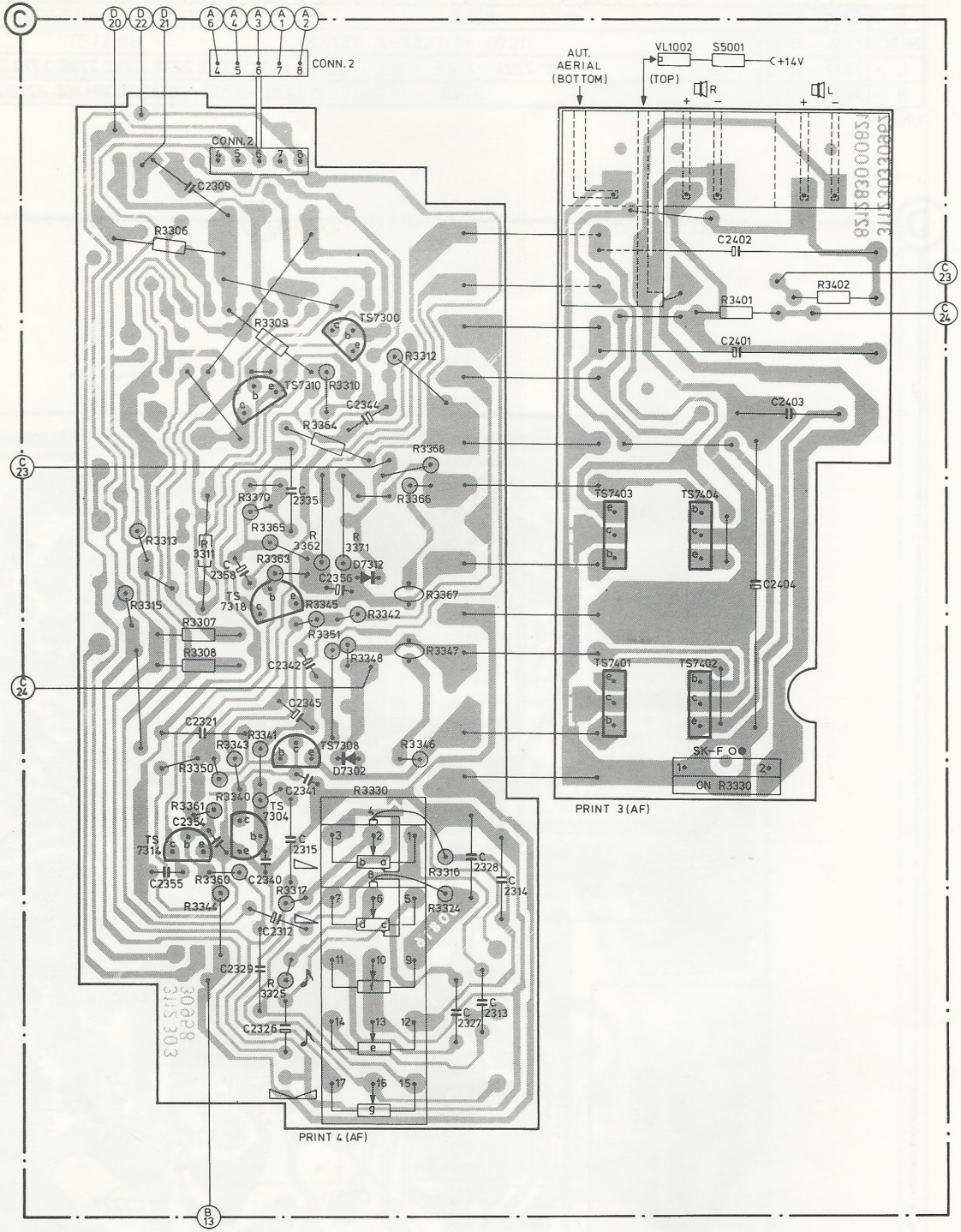

R	C	MISC
		VL1002
		S5001
		CONN. 2
	2309	
3306	2402	
3402		
3401		
3309		TS7300
3312	2401	
3310		
	2403	TS7310
	2344	
3364		
3368		
3366	2335	
3370		
3371		
3313		TS7403
3365		TS7404
3311		
3362	2358	D7312
3363	2404	
3367	2356	TS7318
3315		
3342		
3345		
3307		
3348		
3347	2342	
3351		
3308		
		TS7401
	2345	TS7402
	2321	
3341		TS7308
3343		D7302
3346		
3350	2341	SK-F
3340		
3361		
	2315	TS7304
3330	2354	TS7314
3316	2328	
	2340	
3360	2355	
3344	2314	
3324		
3317	2312	
	2329	
3325		
	2313	
	2327	
	2326	

12063D12

Fig. 2b

S	5204···5212	5206				5208. 5204			5207						5209		5210		5211				5212		S
MISC.	7210···7220			SK-A TS7220								TS7219a D7210			TS7219b						TS7219c D7211			MISC.
C	2222···2272		2224···2226			2231···2234.2230.2235.2227.2239.2270.2240.2222.2271								2223	2243.2242			2244.2247		2272	2246		2245	2248	C
R	3228···3281			3228			3230···3233	3280.3279		3229	3238	3239	3240	3242	3241	3243	3281	3245.3248.3247.3249.3244.3246							R

UNIT D

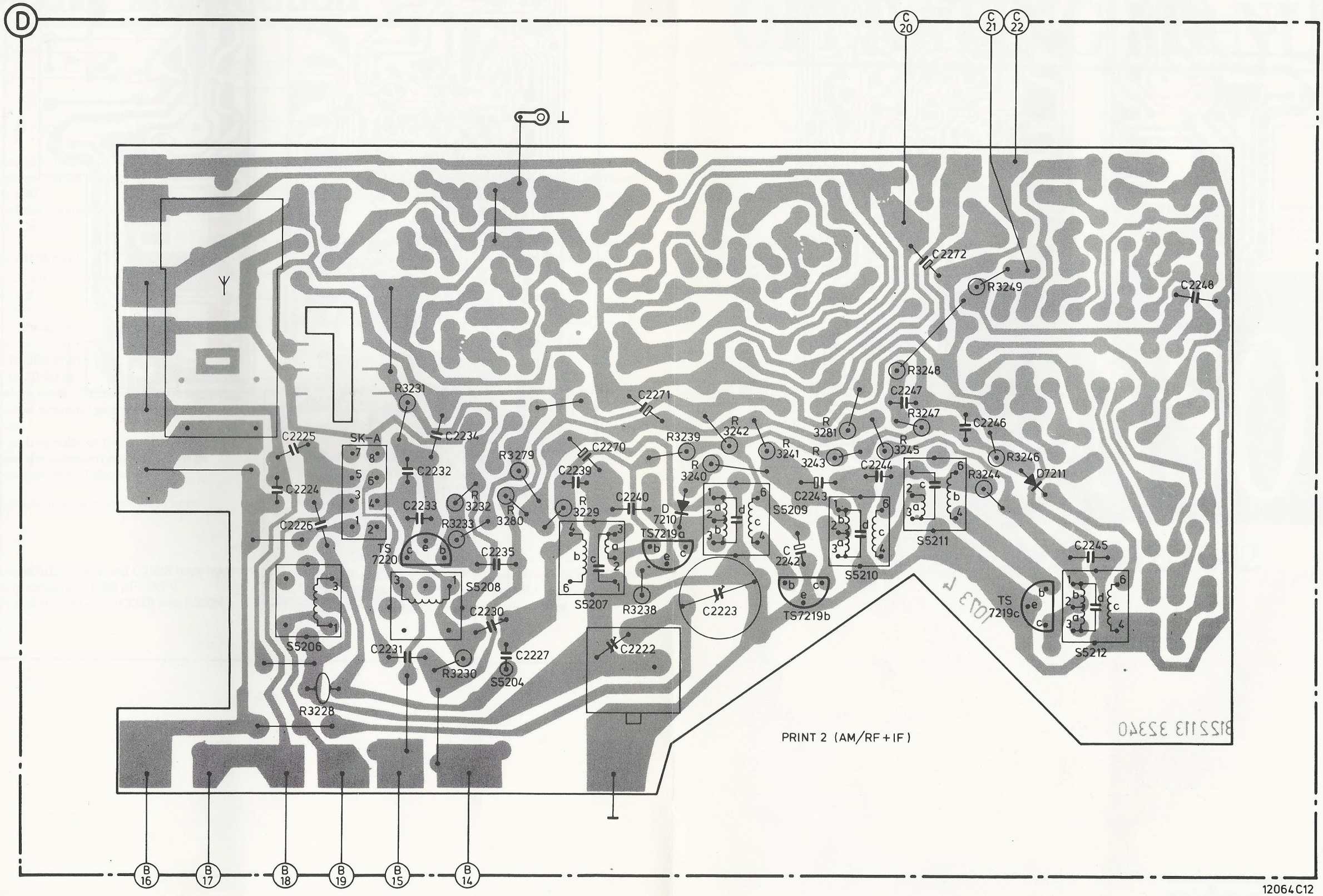

12064C12

Fig. 3

Service Service Service Information

1977-09-30

CARRADIO CASSETTE PLAYER
22AC460

A77-327

Already published: A77-309

Correction to Service Information A77-309:
The change by which connector 2 was deleted is effective from code WA01.
The denomination of the connector on print 4 (AF), see page 2, must be "Conn. 1"

Adjusting the quiescent current

In the Service Manual, adjusting the quiescent current has been mentioned wrongly.
The correct adjustment is:
- Open the bridges in the collectors of TS7401 and TS7403
- Connect an mA-meter across these bridges.
- Using R3348 and R3368 (12 to 27 Ω incl.), adjust the quiescent current to 20-60 mA.

In sets produced before week 732, the quiescent current may have been adjusted wrongly, so that cross-over distortion may occur.
This is audible as a grating noise in the loudspeakers.
To solve this problem the quiescent current has to be adjusted in the manner described above.

During production the following changes have been introduced:

LF-section:

- Effective from code WA02 C2314 and C2328 have been changed to tantalum capacitors 0,68 μF - 35 V (5322 124 14039) and the value of R3316 and R3324 to 680 Ω.
- For the -/85, effective from week 716, a tantalum capacitor of 0,47 μF - 35 V (4822 124 10195) has been fitted in parallel with C2314 and C2328 as a provisional solution.
  Reason: Improving the physiological tone control.
- Effective from week 738 the jumpers at TS7300 have been deleted and the track of print 4 (AF) has been changed (Fig. 1).
  Reason: Streamlining the production

Recorder section:

- Effective from code WA02-718 the value of R3531 has been changed to 15 kΩ.
  Reason: Improving overload protection of IC7518
- Effective from week 721 D7501 has been replaced with type BAW62 (5322 130 30613).
  Reason: Non-availability of BAX13
- Effective from code WA03-726 have been added:
  C2504 between point 1 of playback head K423a and mass and C2509 between point 2 of playback head K423b and mass. C2504, C2509 = 2,7 nF (ΔΔ)
  For this, the print track had to be changed (Fig. 2).
  Reason: Improving the playback of high notes.

AM-HF/IF section:

Effective from week 708, the medium frequency has been changed to 468 kHz for the -/84 and -/88 versions.
Reason: At the suggestion of the Comm. Dept.

Printed in the Netherlands

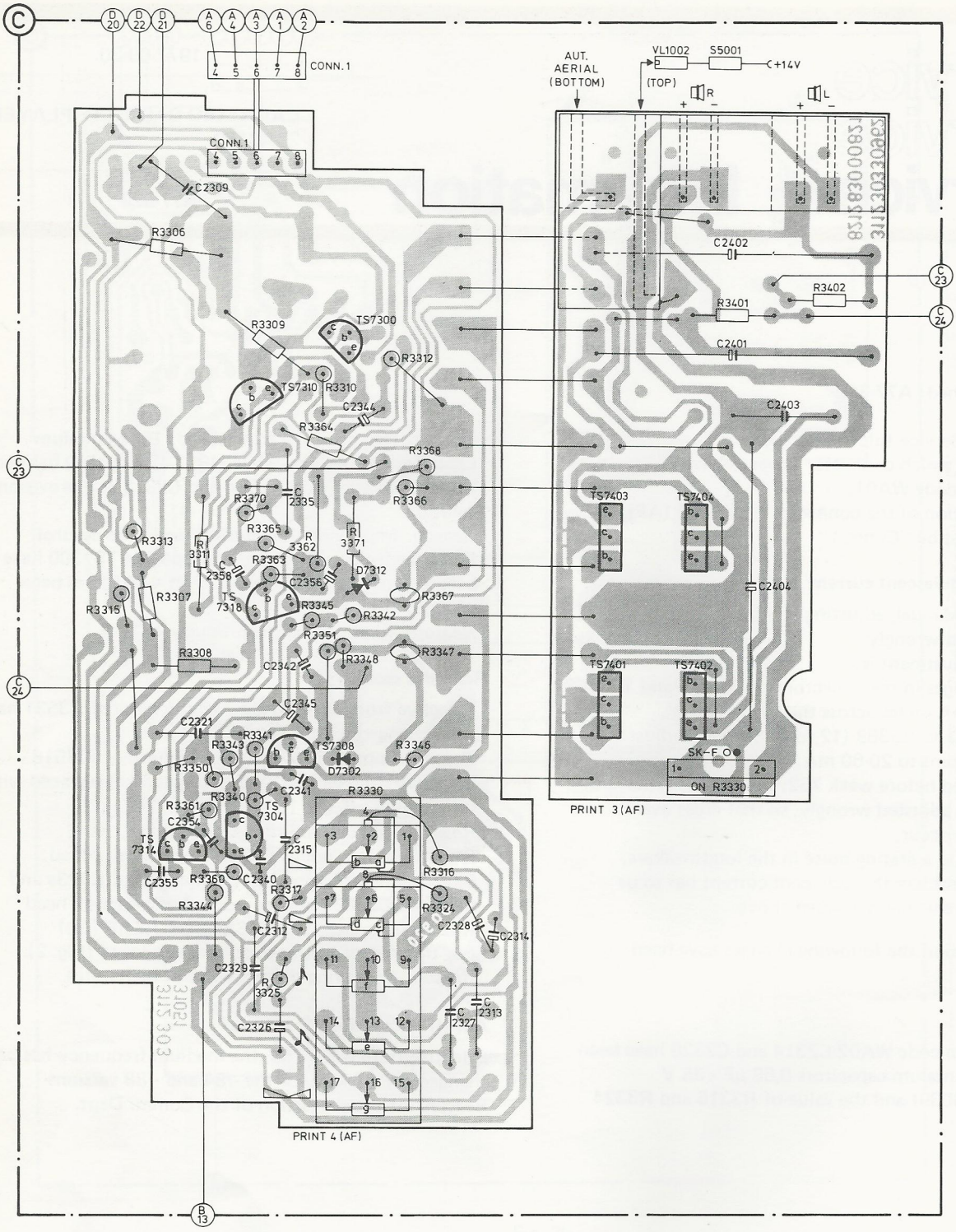

R	C	MISC
		VL1002
		S5001
		CONN.1
	2309	
3306		
	2402	
3402		
3401		
3309		TS7300
	2401	
3312		
3310		
		TS7310
	2403	
	2344	
3364		
3368		
3366		
	2335	
3370		
3371		
3313		TS7403
3365		TS7404
3311		
3362	2358	
3363		D7312
3367	2404	
3315	2356	TS7318
3342		
3345		
3307		
3348		
3347	2342	
3351		
3308		
		TS7401
	2345	TS7402
	2321	
3341		TS7308
3343		D7302
3346		
3350	2341	SK-F
3340		
3361		
	2315	TS7304
3330	2354	
		TS7314
3316		
	2340	
3360	2355	
3344		
3324		
3317		
	2312	
	2328	
	2314	
	2329	
3325		
	2313	
	2327	
	2326	

12063D12A

Fig. 1a

MISC	C	R
CONN.1		
	2309	
	2402	3306
		3402
		3401
TS7300		3309
	2401	3312
		3310
TS7310	2403	
	2344	
		3364
		3368
		3366
	2335	
		3370
		3371
TS7403		3313
TS7404		3365
		3311
D7312	2358	3362
	2404	3363
TS7318	2356	3367
		3315
		3342
		3345
		3307
		3348
	2342	3347
		3351
		3308
TS7401		
TS7402	2345	
	2321	
TS7308		3341
D7302		3343
		3346
SK-F	2341	3350
		3340
		3361
TS7304	2315	
TS7314	2354	3330
		3316
	2340	
	2355	3360
		3344
		3324
	2312	3317
	2328	
	2314	
	2329	
		3325
	2313	
	2327	
	2326	

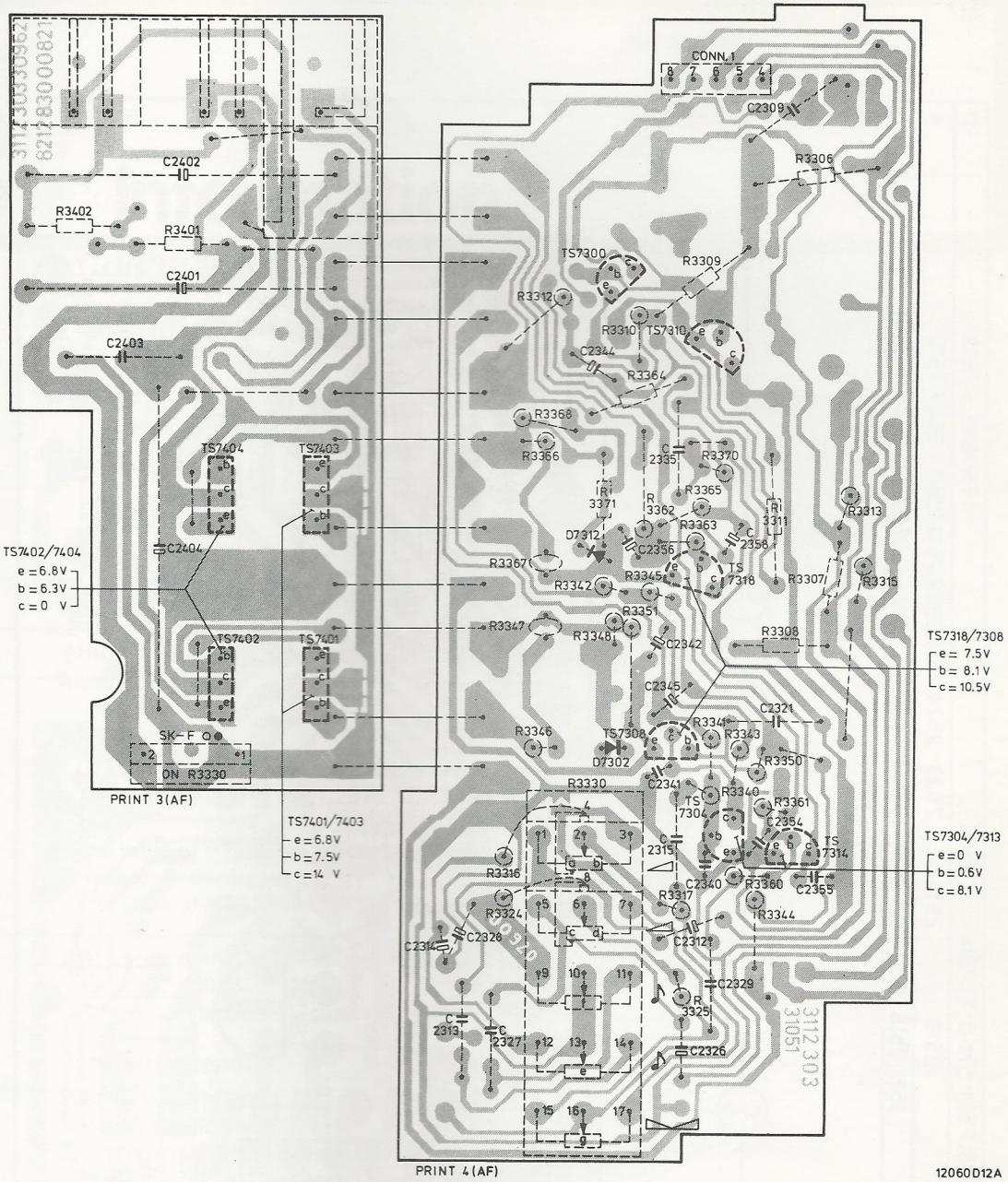

Fig. 1b

MISC	D7502.7503 SK-E IC7518 D7505.7501 SK-D TS7514 D7504 TS7510···7513
C	2521 2519 2522 2518 2515 2523 2524.2516.2509.2512.2501···2507. 2510
R	3528. 3526 3538 3525 3530···3533 3529 3519 3518 3537 3521 3535 3534 3522 3514 3520 3509··3512 3506 3501···3504

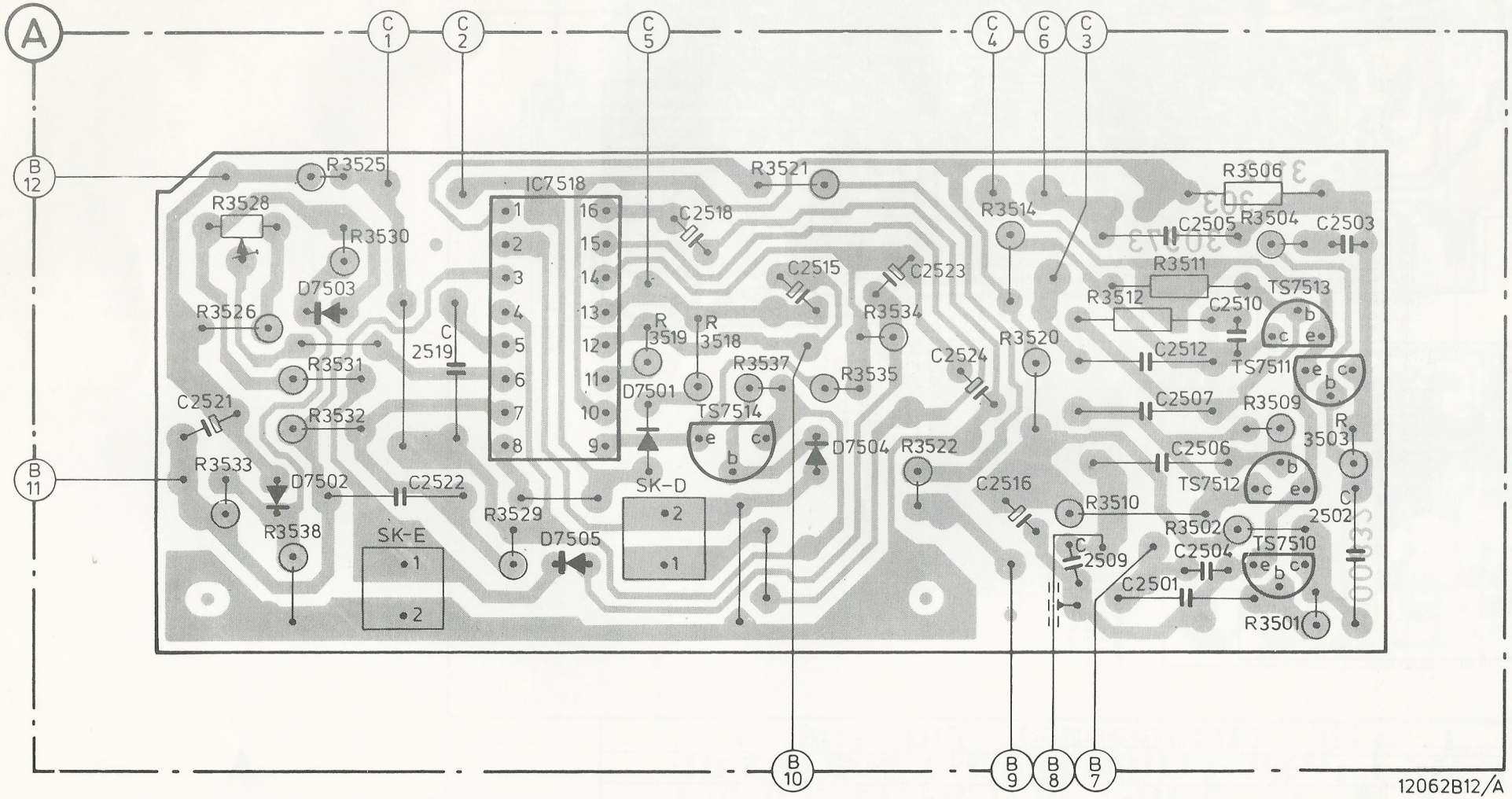

Fig. 2

Service
Service
Service Information

1977-12-08

CAR RADIO CASSETTE PLAYER
22AC460

A77-336

Already published: A77-309; A77-327

Effective from code WA04 the following changes have been introduced:

LF-section:

. C2314 and C2328 have been changed to 120 nF ●●
. The value of C2315 and C2329 has been changed to 100 nF.
. The value of C2309 has been changed to 10 nF
Reason: Better sound quality
. The value of R3316 and R3314 has been changed to 1,8 kΩ.
. Potentiometer R3330 has been replaced with 4822 102 50015
Reason: Better volume control tracking.

AM-HF/IF section:

Added: C2249 (1 nF △△)
Deleted: C2248 and R3248.
The value of C2247 has been changed to 560 pF
The value of R3247 has been changed to 82 kΩ
Also, various components have been relocated, see Fig. 1.
Reason: Better sound quality.

N.B.:
As a provisional solution, in a number of apparatus of the -/84 and -/88 versions, only the changes in the AM–HF/IF section have been effected. This has been done without changing the WA-code.
However, in those cases the print is marked with a long red line.

Printed in the Netherlands

S	5204…5212	5206	5208.5204	5207	5209	5210	5211	5212	S
MISC.	7210…7220	SK-A TS7220		TS7219a D7210	TS7219b			TS7219c D7211	MISC.
C	2222…2272	2224…2226	2231…2234.2230.2235.2227.2239.2270.2240.2222.2271.2272.2223		2243.2242	2244	2246.2249.2247	2245	C
R	3228…3281	3228	3230…3233 3280.3279	3229.3281.3238 3239 3240 3242	3241 3243	3245	3246.3249.3244.3247		R

UNIT D

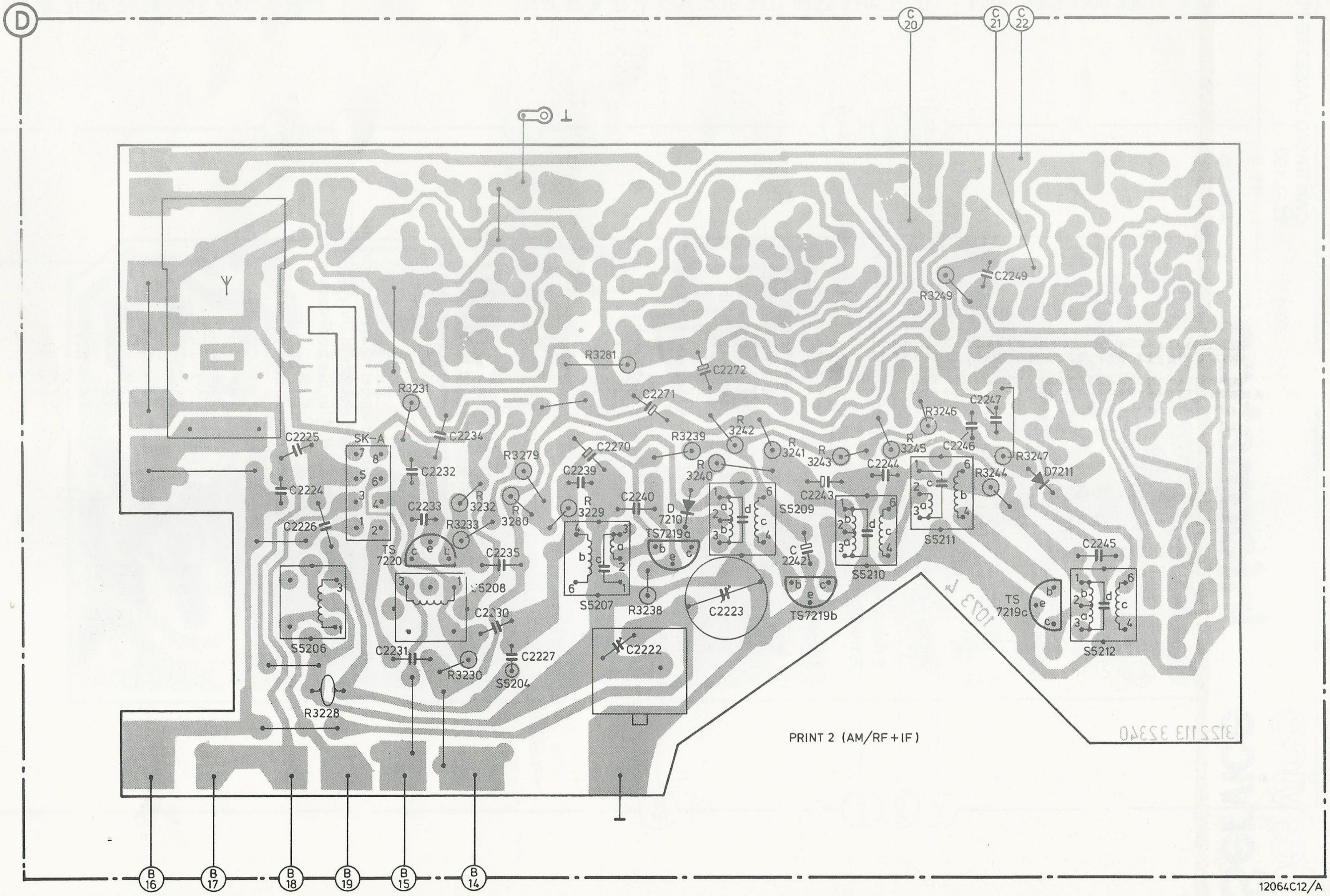

12064C12/A

1979-04-25

CASSETTE AUTO RADIO
22AC460

A79-303

Already issued: A77-309, A77-327

MODIFICATIONS DURING PRODUCTION

AM section

- As from week 748 C2272 has been replaced by R3282 - 1.8 Ω - 0.125 W.
  Reason: In order to prevent change-over from "playback" to "radio" after insertion of a cassette.
- As from week 830 C2222 has been replaced by a trimming capacitor of 80 pF, code 4822 125 50097. Moreover, the printed circuit track has been modified at this location.
  Reason: In order to prevent crackle when adjusting the aerial trimmer.

LF section

- As from week 804 the location of the indications "R/D" and "L/G" on the rear bracket has been corrected. The connection of the **right-hand** loud-speaker (R/D) is now situated directly below the automatic-aerial connection.
  Note: Please adapt drawing 10850A of the Service Manual accordingly.
- As from week 811 the location of C2356 and R3371 has been changed.
  Reason: In order to prevent short-circuiting to the heat sink of the output transistors.

Tape deck

- As from week 733 IC7518 has been replaced by type TDA 1006-S1, code number 4822 209 80406.
  Reason: Standardisation.
- As from week 738 R3545 has been changed to 27 kΩ.
  Reason: Reduction of the temperature rise during fast winding.
- As from week 746 C2504 has been changed to 2.7 nF - 10 % - 63 V, code number 4822 122 31246 and C2509 to 2.7 nF - 5 % - 63 V, code number 5322 121 54065.
  Reason: To avoid microphony.
- Starting from code WA05 D7503 and R3538 have been cancelled, R3530 has been changed to 10 Ω, R3533 to 680 Ω, D7502 has been replaced by BZX79/B4V7 (5322 130 34174) and has also been reversed.
  Reason: Improved temperature compensation.
- As from week 813 C2509 has been changed to 2.7 nF - 10 % - 63 V (4822 122 31246)
- As from week 830 the print switches 274 (SK-D/E) have been replaced by an improved version, code number 4822 278 90341.
  Reason: Simplified mounting
- As from week 835 D7506 has been replaced by CQY54 (4822 130 30914).
  Reason: Standardisation

Amendments to the Service Manual

- In A77-336 the location of the connections C 23 and C 21 is not correct. See the Fig. below
- The item number of the slide turn-o-lock should be 206 instead of 613, code number 4822 403 30293.
- The code number of item 202/79L/80/85 should read 4822 532 60628 that of item 202/79R/84/88 should read 4822 532 60634.
- The code number of the AM core, item 217 should read 4822 526 10109. Item 218 does not appear in this set (see expl. view CS 56 414 and electrical partslist).
- The code number of item 261 should read 4822 255 40115.

Printed in the Netherlands

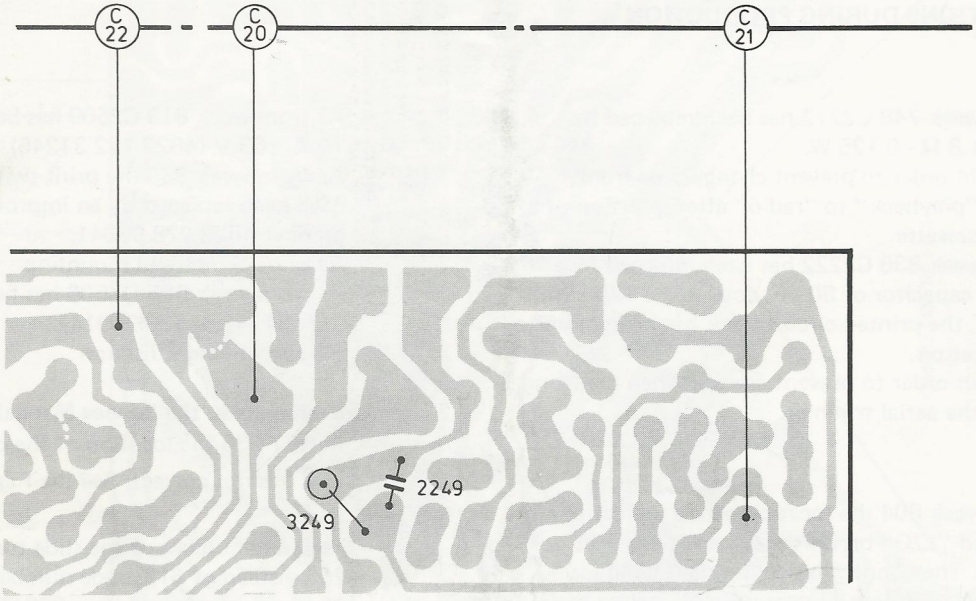

16837A 2