PHILIPS RADIOPLAYER
MODEL 226

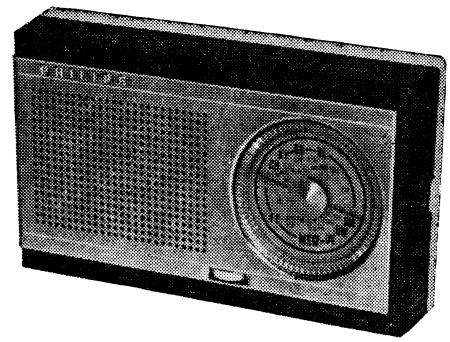

SPECIFICATIONS

Tuning Range	530-1610 Kc/s
Intermediate Frequency	455 Kc/s
Power Supply—Battery	4.5V — 3 x 1.5V type 915, 1015 or 3915
Battery Consumption	7.6mA (approx.) no signal

TRANSISTOR EQUIPMENT AND VOLTAGE/CURRENT ANALYSIS

Transistor Function	Transistor No.	Transistor Type	Collector		Base Volts	Emitter Volts
			Volts	mA		
Frequency Converter	TR1	OC44	3.8	0.43	0.73	0.72
1st I.F. Amplifier	TR2	OC45	3.8	0.38	0.35	0.22
2nd I.F. Amplifier	TR3	OC45	3.8	0.73	0.82	0.69
1st Audio Amplifier	TR4	OC71	1.4	0.49	0.71	0.61
2nd Audio Amplifier	TR5	OC71	4.0	1.1	1.4	1.3
Push Pull Audio Amplifier	TR6	OC74	4.4	2.0	0.2	0.05
Push Pull Audio Amplifier	TR7	OC74	4.4	2.0	0.2	0.05
Demodulator	D1	OA79	Germanium diode			

Voltages measured with a V.T.V.M. Receiver in "no signal" condition.

TO REMOVE CHASSIS FROM CASE.

Remove back of receiver by grasping rear, towards one end, between thumb and fore-finger and front of receiver similarly, then separating. Unscrew knurled screw and remove dial window. Loosen two retaining screws and remove dial scale. Remove screw (adjacent to gang spindle) securing chassis to front case.

The chassis may now be removed from the case front. Replacement is a reversal of the above procedure, however, the following points should be observed:—

Insert speaker end of chassis first, ensuring that the chassis locating lugs slide into the mounting holes in case. Slide earphone socket assembly into cavity in case end. Finally, ensure that the dial window is correctly positioned on tuning gang spindle before tightening knurled screw.

CAPACITORS

Item No.	Description	Type or Code No.
C1, C1A C2, C2A	Tuning Gang with Trimmers	49.002.48
C5	0.047μF 30VW lacquered foil	B1.655.09
C6	0.01μF +50% —20% ceramic	C301GB/H10K
C7	3.9pF ± 0.5pF ceramic	C304AB/L3E9
C8	Part of 1st I.F.T.	
C9	3.2μF 40V electrolytic	C426AE/G3.2
C10	0.047μF 30V lacquered foil	B1.655.09
C11	Part of 2nd I.F.T.	
C12	64pF ± 2% ceramic	C304GH/C64E
C13	0.047μF 30V lacquered foil	B1.655.09
C14	0.047μF 30V lacquered foil	B1.655.09
C15	Part of 3rd I.F.T.	
C16	30pF ± 5% ceramic	C304GH/B30E
C17	80μF 6.4V electrolytic	C426AM/C80
C18	0.0042μF Part of combined	Refer
C19	0.0042μF unit E556ZZ/01	R9, R10
C20	3.2μF 6.4V electrolytic	C426AD/C3.2
C21	220pF Part of combined unit E551ZZ/04	Refer R13
C22	20μF 6.4V electrolytic	C426AM/C20
C23	20μF 6.4V electrolytic	C426AM/C20
C24	0.047μF 30V lacquered foil	B1.655.09

All tolerances are ± 20% unless otherwise specified.

RESISTORS

Item No.	Description	Type or Code No.
R1	8.2kΩ ½W carbon	
R2	1.5kΩ ½W carbon	
R3	2.2kΩ ½W carbon	
R4	150kΩ ½W carbon	
R5	560Ω ½W carbon	
R6	15kΩ ½W carbon	
R7	4.7kΩ ½W carbon	
R8	1kΩ ½W carbon	
R9	15kΩ	
R10	1kΩ	
C18	0.0042μF Combined Unit	E556ZZ/01
C19	0.0042μF	
R11	10kΩ potentiometer with switch	B1.514.87
R12	10kΩ ½W carbon	
R13	56kΩ	
C21	220pF Combined Unit	E551ZZ/04
R14	1.2kΩ ½W carbon	
R15	8.2kΩ ½W carbon	
R16	1.2kΩ ½W carbon	
R17	220Ω ½W carbon	
R18	3kΩ ± 5% ½W carbon	
R19	100Ω ± 5% ½W carbon	
R20	10Ω ± 5% ½W carbon	
R21	4.7kΩ ½W carbon	
R22	270Ω ½W carbon	

All tolerances are ± 10% unless otherwise specified.

INDUCTORS

Item No.	D.C. Resistance (ohms)	Description	Type or Code No.
L1	1.3	Rod Aerial Assembly	A3.986.48
L2	<0.5		
L5, L6, L7	3.8	Oscillator Coil	A3.129.76
L8		1st. I.F. Transformer	A3.129.60
L9	1.5		
L10	<0.5		
L11		2nd I.F. Transformer	A3.129.60
L12	1.5		
L13	<0.5		
L14		3rd I.F. Transformer	A3.129.61
L15	1.5		
L16	<0.5		
L17	344	Driver Transformer	A3.162.18
L18	120		
L19	120		
L20	4.2	Output Transformer	A3.154.22
L21	4.2		
L22	<0.5		
L25		Loudspeaker	AD2216Z

"D.C. Resistance" tolerances are ± 10% unless otherwise specified.

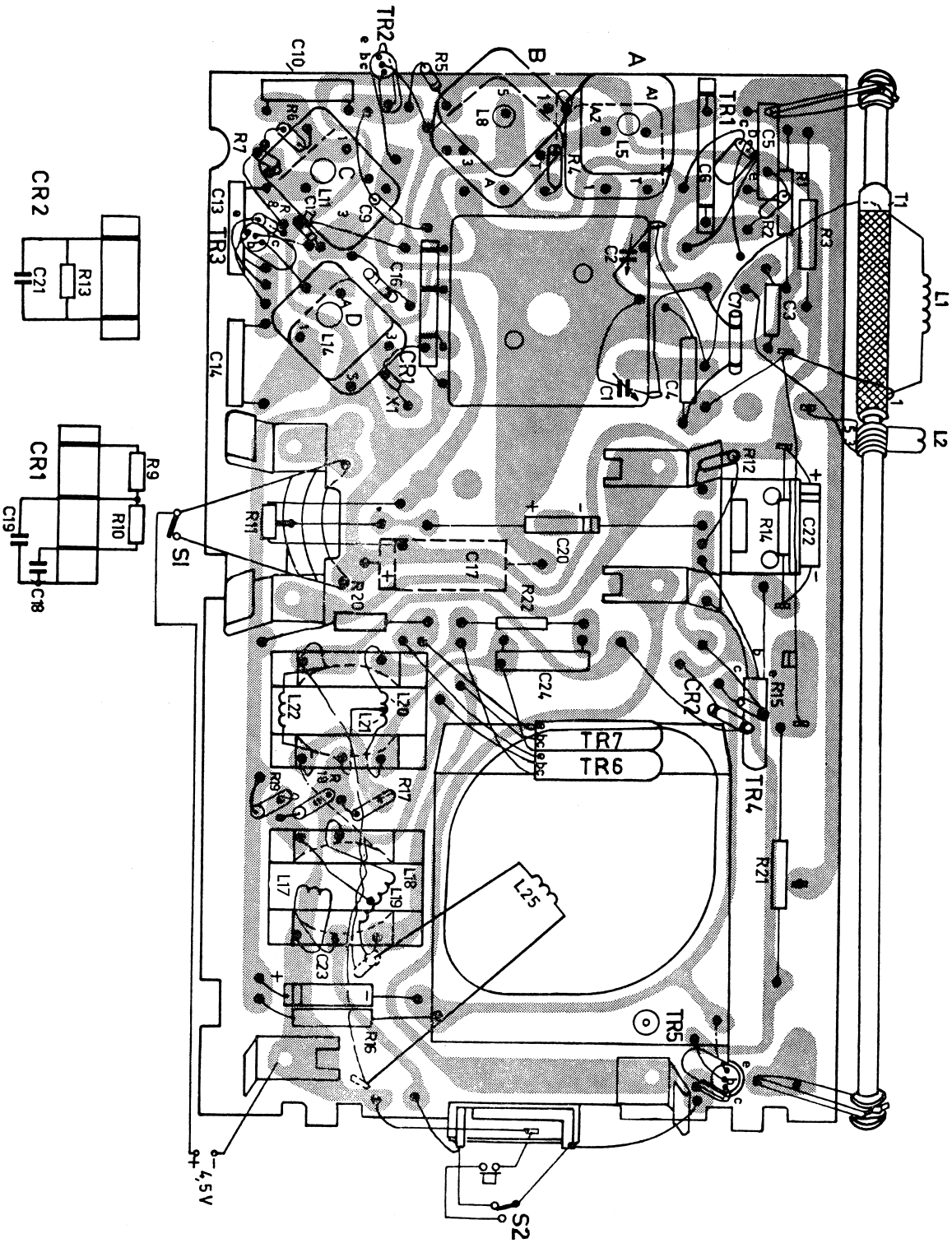
T1
L1
L2
R3
R1
R2
C5
C3
C7
C6
TR1
C4
C1
C2
A
B
A1
L5
L2
R4
L8
R5
TR2
C10
R6
R7
C13
TR3
C9
C11
C12
C16
L11
L14
CR1
X1
C14
R12
C22
R14
R15
CR2
TR4
R21
C20
C17
R22
C24
TR7
TR6
R11
R20
S1
R9
R10
CR1
C19
C18
CR2
R13
C21
L20
L21
L22
R17
R18
R19
L18
L19
L17
C23
R16
L25
TR5
S2
-4,5V

MISCELLANEOUS COMPONENTS

Description	Type or Code No.
Case Assy. front Red (incl. grille, speaker pad)	CR.572.180
Case Assy. front Black (incl. grille, speaker pad)	CR.572.181
Case, leather receiver	CR.572.591
Case, leather earphone	CR.572.592
Earphone Assy.	CZ.165.250
Grommet, aerial rod mtg. x2	P7.060.08/5A
Knob, volume control	A3.784.01

Description	Type or Code No.
Lid Assy. case (incl. support arm and spring)	CR.572.182
Scale, dial (packet of 6 scales)	CR.483.041
Screw, knurled (window securing)	A3.715.34
Socket Assy., earphone	A3.708.19
Spring Contact, battery x3	A3.645.73
Spring Contact, battery	A3.645.74
Spring Contact, battery x2	A3.645.75
Window Assy. dial	A3.763.84

IMPORTANT! When ordering spare parts, quote CODE NUMBER of part and MODEL NUMBER of Receiver. In claiming free replacement under GUARANTEE, return defective part PROMPTLY and quote MODEL and SERIAL NUMBER of Receiver and DATE OF PURCHASE.

PHILIPS

Published by PHILIPS ELECTRICAL INDUSTRIES PTY. LIMITED

Sydney - Newcastle - Melbourne - Adelaide - Perth - Brisbane - Hobart
Canberra - Wollongong

JULY, 1961

HARMAN & JACKA LTD.—PRINTERS

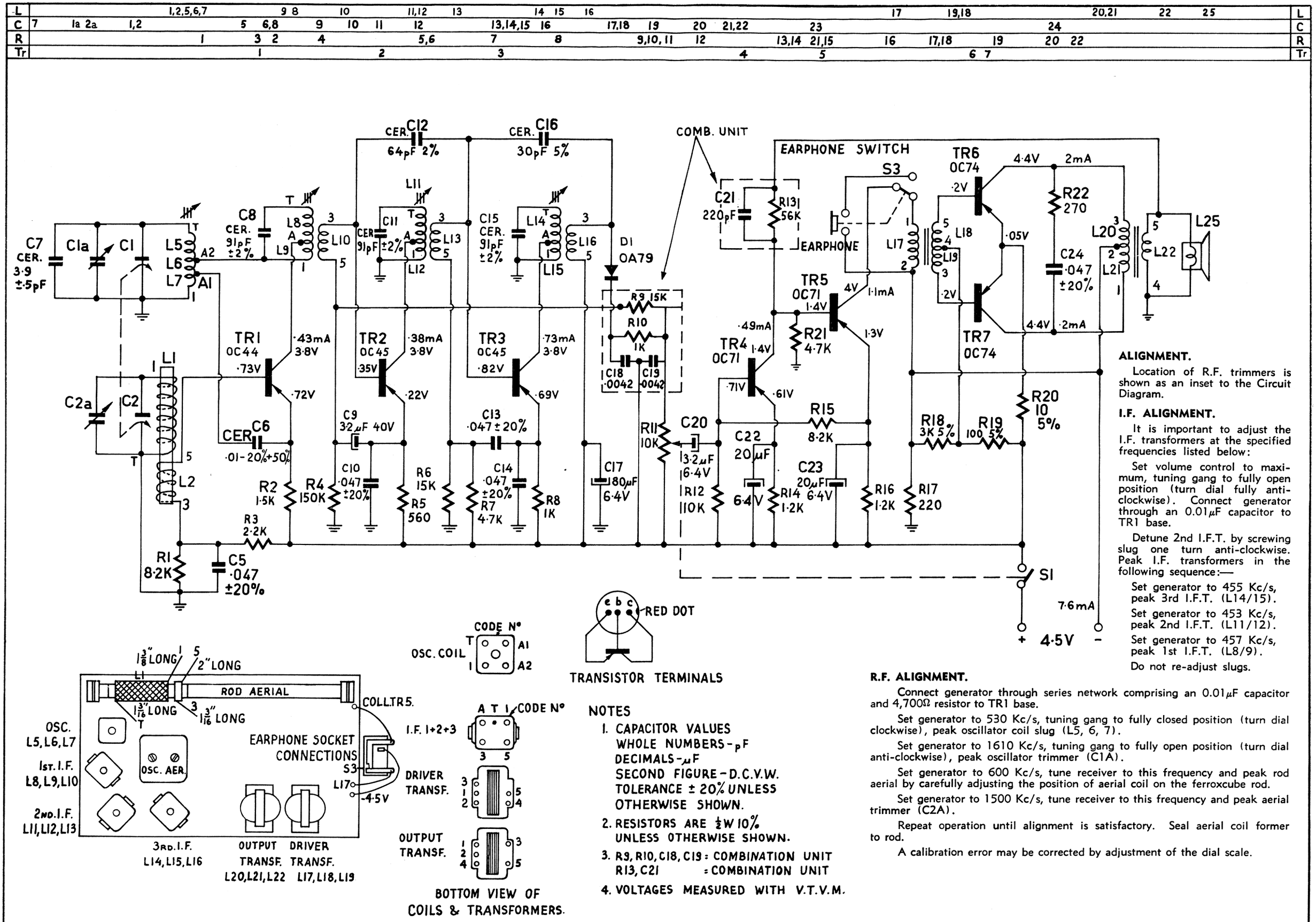

ALIGNMENT.

Location of R.F. trimmers is shown as an inset to the Circuit Diagram.

I.F. ALIGNMENT.

It is important to adjust the I.F. transformers at the specified frequencies listed below:

Set volume control to maximum, tuning gang to fully open position (turn dial fully anti-clockwise). Connect generator through an 0.01μF capacitor to TR1 base.

Detune 2nd I.F.T. by screwing slug one turn anti-clockwise. Peak I.F. transformers in the following sequence:—

Set generator to 455 Kc/s, peak 3rd I.F.T. (L14/15).

Set generator to 453 Kc/s, peak 2nd I.F.T. (L11/12).

Set generator to 457 Kc/s, peak 1st I.F.T. (L8/9).

Do not re-adjust slugs.

R.F. ALIGNMENT.

Connect generator through series network comprising an 0.01μF capacitor and 4,700Ω resistor to TR1 base.

Set generator to 530 Kc/s, tuning gang to fully closed position (turn dial clockwise), peak oscillator coil slug (L5, 6, 7).

Set generator to 1610 Kc/s, tuning gang to fully open position (turn dial anti-clockwise), peak oscillator trimmer (C1A).

Set generator to 600 Kc/s, tune receiver to this frequency and peak rod aerial by carefully adjusting the position of aerial coil on the ferroxcube rod.

Set generator to 1500 Kc/s, tune receiver to this frequency and peak aerial trimmer (C2A).

Repeat operation until alignment is satisfactory. Seal aerial coil former to rod.

A calibration error may be corrected by adjustment of the dial scale.

NOTES

1. CAPACITOR VALUES
   WHOLE NUMBERS - pF
   DECIMALS - μF
   SECOND FIGURE - D.C.V.W.
   TOLERANCE ± 20% UNLESS OTHERWISE SHOWN.
2. RESISTORS ARE ½W 10% UNLESS OTHERWISE SHOWN.
3. R9, R10, C18, C19 = COMBINATION UNIT
   R13, C21 = COMBINATION UNIT
4. VOLTAGES MEASURED WITH V.T.V.M.