TECHNICAL INFORMATION AND SERVICE DATA

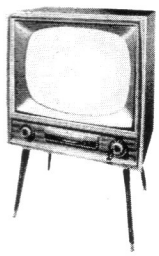

204-T

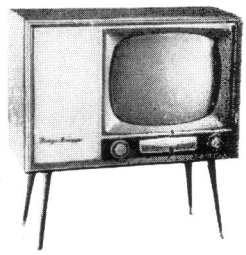

205-C

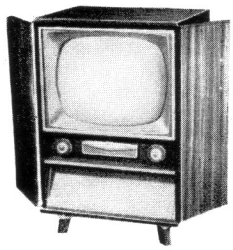

206-C

A.W.A. RADIOLA TELEVISION RECEIVER

Models 204-T, 205-C and 206-C

(21 inch, 24 Valves, A.C. Operated)

Issued by Amalgamated Wireless (Australasia) Ltd.

GENERAL DESCRIPTION

The Models 204-T, 205-C and 206-C are "21-inch," 24-valve, A.C. operated Television Receivers.

Features of design include: Inter-carrier F.M. system; Ratio Detector, Aluminised Kinescope, Amplified A.G.C., A.F.C. Horizontal Hold, Twin Loudspeakers.

ELECTRICAL AND MECHANICAL SPECIFICATIONS

PICTURE SIZE: Approximately 261 sq. ins. on a 21ALP4A Kinescope.

TELEVISION CHANNELS: All 10 V.H.F. channels. (Refer Alignment Procedure)

INTERMEDIATE FREQUENCIES

Video I.F. Carrier Frequency ..... 36.0 Mc/s
Sound I.F. Carrier Frequency ..... 30.5 Mc/s

POWER CONSUMPTION: 200 watts max.

UNDISTORTED AUDIO POWER OUTPUT: 5 watts max.

LOUDSPEAKERS—

Models 204-T, 204-TY, 204-TX and 204-TW:
7" x 5" Permanent Magnet No. 21034 and
7" x 5" Permanent Magnet No. 21045.

Models 205-C, 206-C:
9" x 6" Permanent Magnet No. 21519 and
9" x 6" Permanent Magnet No. 21520.

Models 205-CZ, 205-CY, 205-CX and 205-CW:
9" x 6" Permanent Magnet No. 21177 and
7" x 5" Permanent Magnet No. 21045 and
6½" Permanent Magnet No. 21178.

Models 206-CZ, 206-CY:
9" x 6" Permanent Magnet No. 21177 and
7" x 5" Permanent Magnet No. 21034.

Transformer No. 21147.

V.C. Impedance of combination.
6—8 ohms at 400 c/s.

VALVE COMPLEMENT:

(1) Radiotron 6BQ7A ..... R.F. Amplifier
(2) Radiotron 6U8 ..... R.F. Oscillator and Converter
(3) Radiotron 6AU6 ..... 1st Sound I.F. Amplifier
(4) Radiotron 6AU6 ..... 2nd Sound I.F. Amplifier
(5) Radiotron 6AL5 ..... Ratio Detector
(6) Radiotron 6AV6 ..... A.F. Amplifier
(7) Radiotron 6AQ5 ..... A.F. Output
(8) Radiotron 6BA6 ..... 1st Video I.F. Amplifier
(9) Radiotron 6CB6 ..... 2nd Video I.F. Amplifier
(10) Radiotron 6CB6 ..... 3rd Video I.F. Amplifier
(11) Radiotron 6CB6 ..... 4th Video I.F. Amplifier
(12) Radiotron 6AL5 . Video Detector and A.G.C. Clamp
(13) Radiotron 12BY7 ..... Video Amplifier
(14) Radiotron 6CB6 ..... A.G.C. Amplifier
(15) Radiotron 6SN7GTA .... Vertical Sync. Separator and Horizontal Sync. Separator
(16) Radiotron 6SN7GTA ..... Sync. Amplifier and Vertical Oscillator
(17) Radiotron 6AQ5 ..... Vertical Output
(18) Radiotron 6SN7GTA ..... Horizontal Control and Horizontal Oscillator
(19) Radiotron 6DQ6A ..... Horizontal Output
(20) Radiotron 6AX4GT ..... Damper
(21) Radiotron 1B3GT ..... High Voltage Rectifier
(22) Radiotron 5AS4 ..... Rectifier
(23) Radiotron 5AS4 ..... Rectifier
(24) Radiotron 21ALP4A ..... Kinescope
or (24) Radiotron 21CBP4A ..... Kinescope
ON W SERIES ONLY

SECOND EDITION—5/58

AERIAL INPUT IMPEDANCE
Choice—300 ohms balanced, or 72 ohms unbalanced.

VIDEO RESPONSE ..... To 4.25 Mc/s

FOCUS ..... Electrostatic (Low Voltage)

SWEEP DEFLECTION ..... Magnetic

SCANNING ..... Interlaced, 625 lines

HORIZONTAL SCANNING FREQUENCY ..... 15,625 c/s

VERTICAL SCANNING FREQUENCY ..... 50 c/s

PICTURE REPETITION RATE ..... 25 per second

OPERATING CONTROLS:

Channel Selector Fine Tuning	Concentric.
Power/Volume Brightness	Concentric.
Contrast Horizontal Hold Vertical Hold Tone	Single Controls under Front Panel.

NON-OPERATING CONTROLS (not including R.F. and I.F. adjustments)

Height ..... screwdriver adjustment under front panel

Vertical Linearity ..... screwdriver adjustment under front panel

Horizontal Drive..... rear chassis adjustment

Horizontal Sine Wave ..... top chassis adjustment

Horizontal Linearity ..... rear chassis adjustment

Width ..... rear chassis adjustment

A.G.C. Control ..... rear chassis adjustment

Focus ..... rear chassis adjustment

Picture Centring ..... above chassis adjustment

Deflection Yoke ..... above chassis adjustment

Ion Trap Magnet ..... above chassis adjustment

HIGH VOLTAGE WARNING

OPERATION OF THIS RECEIVER OUTSIDE THE CABINET INVOLVES A SHOCK HAZARD FROM THE RECEIVER POWER SUPPLIES. WORK ON THE RECEIVER SHOULD NOT BE ATTEMPTED BY ANYONE WHO IS NOT THOROUGHLY FAMILIAR WITH THE PRECAUTIONS NECESSARY WHEN WORKING ON HIGH VOLTAGE EQUIPMENT. DO NOT OPERATE THE RECEIVER WITH THE HIGH VOLTAGE COMPARTMENT SHIELD REMOVED. MAKE SURE THAT THE EARTH STRAP BETWEEN THE CHASSIS AND THE KINESCOPE ASSEMBLY IS SECURELY FASTENED BEFORE TURNING THE RECEIVER ON.

KINESCOPE HANDLING PRECAUTIONS

DO NOT INSTALL, REMOVE OR HANDLE THE KINESCOPE IN ANY MANNER UNLESS SHATTER-PROOF GOGGLES ARE WORN. PEOPLE NOT SO EQUIPPED SHOULD BE KEPT AWAY WHILE HANDLING KINESCOPES. KEEP THE KINESCOPE AWAY FROM THE BODY WHILE HANDLING.

When the receiver has been switched off after operating for a time, the kinescope will retain a certain charge. Therefore it is advisable to discharge it before handling.

The kinescope bulb encloses a high vacuum and, due to its large surface area, is subjected to considerable air pressure. Therefore, kinescopes must be handled with more care than ordinary receiving valves.

The large end of the kinescope bulb, particularly that part at the rim of the viewing surface, must not be struck, scratched or subjected to more than moderate pressure at any time. When installing, if the valve sticks or fails to slip smoothly into its socket or deflecting yoke, do not force it, but investigate and remove the cause of the trouble. All Radiotron replacement kinescopes are packed in special cartons and should be left in the cartons until required for installation.

OPERATING INSTRUCTIONS.

The following adjustments are necessary when turning the receiver on for the first time:

1. Turn the POWER/VOLUME control clockwise to switch the receiver "ON" and set the control near the middle of its range. An interval of about one minute is necessary for the valves to heat before satisfactory operation is obtained.

2. Set the CHANNEL SELECTOR to the desired channel.

3. Turn the FINE TUNING control fully anti-clockwise.

4. Adjust the VOLUME control, until the desired volume is obtained.

5. Turn the BRIGHTNESS control to the extreme anti-clockwise position and then clockwise until a pattern appears on the screen.

6. Adjust the VERTICAL hold control until there is no vertical movement of the pattern.

7. Adjust the HORIZONTAL hold control until a picture is obtained.

8. Adjust the FINE TUNING, CONTRAST and BRIGHTNESS controls until the picture contrast and brightness is satisfactory.

9. After switching from one channel to another, it may be necessary to repeat adjustments 4 and 8.

10. When the set is switched on again after an idle period, it should not be necessary to repeat the adjustments unless the positions of the controls have been altered. If any adjustment is necessary, adjustment No. 8 is generally sufficient. However, if the controls have been altered it may be necessary to repeat adjustments 1 to 8.

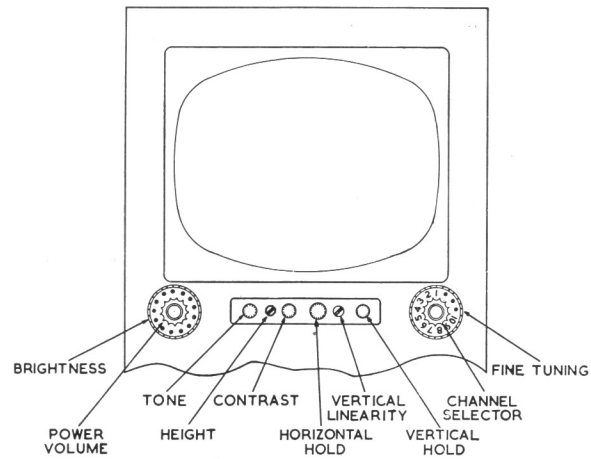

FIG. 1—RECEIVER OPERATING CONTROLS

INSTALLATION INSTRUCTIONS

UNPACKING

These receivers, complete with valves, are packed in cardboard cartons.

Take the receiver from the carton and remove the wooden packing block from the base of the cabinet.

Refer to the label inside the cabinet and make sure that the valves are in their correct sockets and pressed firmly down.

Check to see that the kinescope high voltage lead clip is in place.

Plug the power cable into a 200-240 volts, A.C. Power Point after making sure that the power cable is wired to the correct transformer tap. Refer to the instructions on the cabinet back.

Connect the aerial to be used to the terminals at the rear of the cabinet. The in-built aerial may be used if conditions indicate that satisfactory reception will be obtained.

AERIAL INPUT

A 300 ohm aerial input is provided. However, by rewiring the matching unit input plug, as shown in the circuit diagram, a 72 ohm co-axial cable may be used.

In locations where a very strong signal is likely to cause overloading of the receiver, an attenuator of the type shown in Fig. 10 should be used.

INITIAL OPERATION CHECK

Turn the Power/Volume control clockwise to switch the receiver "ON" and check all operations.

This instrument has been accurately aligned by the manufacturer with precision instruments and should require no further adjustments. However, a check should be made of all the various functions and if further adjustments are found necessary the following should be carried out.

ION TRAP MAGNET ADJUSTMENT

Set the ion trap magnet approximately in the position shown in Fig. 2. Adjust the magnet by moving it backward or forward, at the same time rotating it slightly around the neck of the kinescope, for the brightest raster on the screen. Reduce the brightness control setting until the raster is slightly above average brilliance. Re-adjust the ion trap magnet for maximum raster brilliance. The final touches of this adjustment should be made with the brightness control at the maximum clockwise position with which good line focus can be maintained.

DEFLECTION YOKE ADJUSTMENT (Fig. 2)

If the lines of the raster are not horizontal or squared with the kinescope, rotate the deflection yoke until this condition is obtained. Tighten the yoke adjustment nuts.

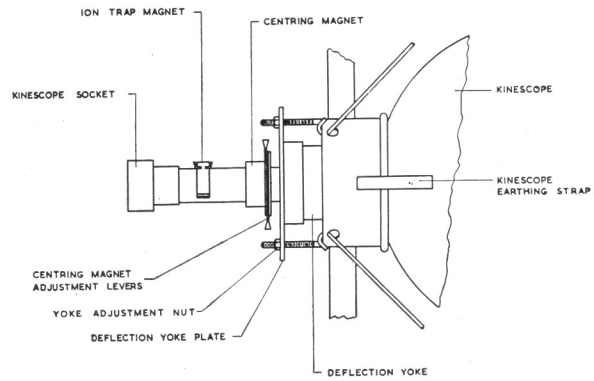

FIG. 2

FOCUS ADJUSTMENT (Fig. 3)

This adjustment has been made at the factory and it should only be necessary to re-adjust if the kinescope is replaced. In this case, adjust the focus control (R231) on the rear of the chassis until maximum definition of the line structure of the raster is obtained.

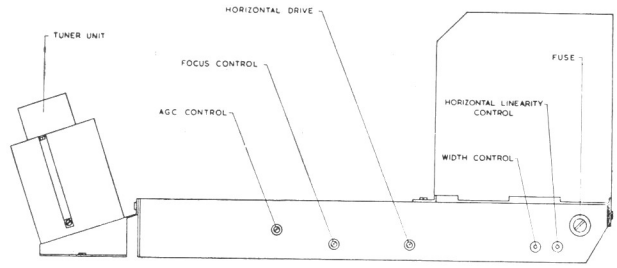

FIG 3
REAR CHASSIS ADJUSTMENTS

PICTURE ADJUSTMENTS

It will now be necessary to obtain a test pattern or picture in order to make further adjustments.

When the Horizontal Oscillator and A.G.C. system are operating correctly, it should be possible to synchronise the picture at this point. However, if the A.G.C. control is not adjusted correctly and the receiver is overloading, it may be impossible to synchronise the picture.

If the receiver is overloading, turn R311 (on the rear of the chassis, Fig. 3) anti-clockwise until the receiver operates normally and the picture can be synchronised.

CHECK OF HORIZONTAL OSCILLATOR ADJUSTMENT

Turn the horizontal hold control to the extreme clockwise position. The picture will be out of synchronisation with a minimum of 12 bars slanting downwards towards the left. Turn the control slowly anti-clockwise. The number of diagonal black bars will gradually reduce and when only 1½ to 3 bars remain, the picture will synchronise with further slight anti-clockwise rotation of the control. The picture should remain synchronised for approximately two full turns of additional anti-clockwise rotation of the control. Continue to turn the control anti-clockwise until the picture falls out of synchronisation. Turning the control beyond the fall-out position should produce between 2 and 5 bars before motorboating occurs. Motorboating should occur before the extreme anti-clockwise position is reached.

When the receiver passes the above checks and the picture is normal and stable, the horizontal oscillator is correctly aligned. Therefore, the "Horizontal Oscillator Adjustment" may be by-passed.

HORIZONTAL OSCILLATOR ADJUSTMENT

If during the above check the receiver failed to hold synchronisation over two full anti-clockwise turns of the control from the pull-in point, the following adjustments are necessary.

Turning the horizontal hold control anti-clockwise will produce a number of bars before motorboating occurs. Adjust the horizontal sine wave coil (L401) until 3 or 4 bars are present before motorboating occurs, when the horizontal hold control is turned anti-clockwise from the fall-out point.

If it is impossible to synchronise the picture and the A.G.C. system is correctly adjusted, it will be necessary to align the Horizontal Oscillator by the method laid down in the Alignment Procedure.

CENTRING ADJUSTMENT

The electrostatic focus kinescope is equipped with special centring magnets. These are in the form of two discs mounted on a non-magnetic tube which is placed around the neck of the kinescope at a distance of about ¼" behind the deflection yoke plate. When the magnets are rotated on the tube so that the levers are opposite, maximum centring effect is produced. To shift the picture, rotate one of the magnets with respect to the other. To shift the picture in the desired direction, rotate the entire centring magnet assembly on the neck of the kinescope. By alternately rotating one magnet with respect to the other, then rotating the entire assembly around the neck of the valve, correct centring of the picture can be obtained.

WIDTH, DRIVE AND HORIZONTAL LINEARITY ADJUSTMENTS

Adjustment of the horizontal drive control affects the high voltage applied to the kinescope. In order to obtain the highest possible voltage and hence the brightest and best focussed picture, turn the horizontal drive trimmer (C409) anti-clockwise until a bright white line begins to appear in approximately the centre of the raster. Then, turn the control clockwise until the line disappears.

Turn the horizontal linearity control (L402) clockwise until the picture begins to cramp on the right-hand side and then anti-clockwise until the cramping disappears and the best linearity is obtained.

Adjust the width control (L404) to obtain correct picture width. This is with the picture extending approximately ¾" on either side of the kinescope mask and normal picture brightness.

A slight re-adjustment of these three controls may now be necessary to obtain the best linearity.

Adjustments of the horizontal drive control affect the horizontal hold and locking range. Therefore, re-check the oscillator alignment.

HEIGHT AND VERTICAL LINEARITY ADJUSTMENTS

The height control (R334) has more effect on the bottom of the picture than the top, tending to give bottom stretch or cramp, depending on the setting of the control. The opposite effect is noticeable with variation of the vertical linearity control (R341) in that it tends to give top stretch or cramp depending on its position. Therefore, to adjust for height and linearity, the two controls should be adjusted in conjunction, so that approximately ½" of the picture extends beyond the top and bottom of the kinescope mask while maintaining the best linearity from top to bottom. The centring may have to be adjusted to obtain the above condition.

A.G.C. THRESHOLD CONTROL

The A.G.C. threshold control (R311) is adjusted at the factory and should not require any further re-adjustment.

To check the adjustment, tune in a strong signal and synchronise the picture. Momentarily remove the signal by switching off the channel and back again. If the picture re-appears immediately, the receiver is not overloading, due to incorrect setting of R311. If the picture does not re-appear immediately, or bends excessively, R311 should be re-adjusted.

Turn R311 fully anti-clockwise. The raster may be bent slightly, but this should be disregarded. Now turn R311 clockwise until there is a very slight bend or change of bend in the picture. Then turn R311 anti-clockwise just enough to remove this bend or change of bend.

If the signal is weak, the above method may not work, as it may be impossible to get the picture to bend. In this case, turn R311 clockwise until the snow in the picture becomes more pronounced, then anti-clockwise until the best signal to noise ratio is obtained.

The A.G.C. control adjustment should be made on a strong signal if possible. If the control is set too far clockwise on a weak signal, the receiver may overload when a strong signal is received.

CHASSIS REMOVAL

To remove the chassis from the cabinet, for repair or the installation of a new kinescope, proceed as follows:

Remove the control knobs by pulling them straight off their spindles.

Disconnect the loudspeaker, aerial, yoke, high voltage cables and kinescope cradle earthing strap.

Disconnect the kinescope socket.

The chassis is held in the cabinet by 5 bolts through the base of the cabinet. Removal of these enables the chassis to be withdrawn.

KINESCOPE HANDLING PRECAUTIONS

Do not install, remove or handle the kinescope in any manner unless shatter-proof goggles are worn. People not so equipped should be kept away while handling kinescopes.

Keep the kinescope away from the body while handling.

REMOVAL AND INSTALLATION OF KINESCOPE

(Except X and W models.)

First disconnect the kinescope socket, yoke and high voltage cables.

Loosen 2 winged nuts in the front roof of the cabinet.

Remove the top glass retainer, safety glass and mask.

Remove 4 hexagon screws from the slide rails of the kinescope assembly.

Gently slide the kinescope and cradle out from the front of the cabinet and place face down on a covered table to avoid scratching.

Slide the centring magnet and ion trap magnet from the neck of the kinescope.

Remove the deflection yoke retaining plate and deflection yoke.

Unscrew two turnbuckles on the rods holding the deflection yoke hood to the kinescope bulb.

Loosen two screws on either side of the straps around the kinescope bulb and ease the cradle and deflection yoke hood from the kinescope.

Replace the kinescope by reversing the removal procedure, making sure that the dust seal is in its correct position.

When viewed from the rear of the cabinet, the high voltage contact on the kinescope should be on the right hand side.

When re-tightening the screws on the straps around the kinescope bulb, tighten them evenly and equally.

SAFETY GLASS REMOVAL

(Except X and W models.)

Remove the cabinet back and loosen two winged nuts in the front roof of the cabinet.

Remove the top glass retainer and the safety glass will be free to lift out.

When replacing the glass, carry out the above instructions in reverse.

NOTE: A different kinescope mounting and cabinet design is used in the X and W series necessitating a new procedure for kinescope and safety glass removal.

REMOVAL OF KINESCOPE IN X AND W SERIES

For the console models remove the chassis as described above.

For the table model remove the chassis as described above and both 7" x 5" speakers.

Remove the three bolts holding the kinescope cradle—one on the roof support and two on the slide rails.

Gently slide the kinescope and cradle assembly out the back of the cabinet and place face down on a covered table to avoid scratching the glass surface.

Unclip the ion trap magnet from the neck of the kinescope (X model only).

Loosen the yoke clamp and slide the yoke and centring magnet assembly from the neck of the kinescope.

Loosen the holding screws on the strap around the kinescope bulb and ease the cradle off the tube.

Replacing the kinescope is the reverse of the above procedure, making sure that the dust seal is in its correct position.

When viewed from the rear of the cabinet, the high voltage contact on the kinescope should be on the right hand side.

SAFETY GLASS REMOVAL

Remove the chassis and kinescope in the manner described above. The mask and safety glass are retained by a wooden bar at the base of the mask. Remove the Philips head screw securing this bar. Holding the mask and glass assembly in one hand, remove the wooden bar by sliding it to one side until the opposite end is free of its recess and the bar may then be lifted out. The mask and safety glass are then removed by allowing them to slide downwards and out.

Replacing the safety glass is the reverse of the above procedure.

RECEIVER LOCATION

The owner should be advised of the importance of placing the receiver in the proper location in the room.

The location should be chosen to agree with the following—

Away from windows so that bright light will not shine directly on the screen or in the viewer's eyes. However, some illumination in the room is desirable.

To give easy access for operation and comfortable viewing.

To permit convenient connection of the external aerial.

Convenient to a power point.

To allow adequate ventilation.

REPLACEMENT OF FUSES

The 1.5A mains fuse is accessible through a hole in the rear cover at the bottom right hand corner. When replacing this fuse, make certain that the receiver is disconnected from the power mains.

The 375 mA B+ fuse is only accessible on removal of the rear cover. Before removing this fuse, ensure that the set is switched off. Even when this is done there is a possibility of shock, if the fuse has blown, due to charge retained by C421. To avoid this, short together the two fuse terminals before attempting to replace this fuse.

ALIGNMENT PROCEDURE

TESTING INSTRUMENTS

To properly service the television receiver, it is recommended that the following testing instruments be available—

(1) A.W.A. Television Sweep Generator, type A56036.

(2) A.W.A. Cathode Ray Oscilloscope (C.R.O.), type A56031.

(3) A.W.A. Television Calibrator, type A56057.

(4) A.W.A. Voltohmyst, type A56010.

(5) A.W.A. Universal Measuring Bridge, type A56048.

AUSTRALIAN TELEVISION CHANNELS

Channel No.	Picture Carrier Freq. Mc/s	Sound Carrier Freq. Mc/s	Receiver R.F. Osc. Freq. Mc/s
1	50.25	55.75	86.25
2	64.25	69.75	100.25
3	86.25	91.75	122.25
4	133.25	138.75	169.25
5	140.25	145.75	176.25
6	175.25	180.75	211.25
7	182.25	187.75	218.25
8	189.25	194.75	225.25
9	196.25	201.75	232.25
10	210.25	215.75	246.25

SOUND I.F. ALIGNMENT

NOTE: When two positions of the core appear to give the correct adjustment, the following apply:—

* coil tuned with core close to chassis.

† coil tuned with core close to can top.

Connect the output of the Television Calibrator to pin 1 of V204 (4th Video I.F.).

Set the Calibrator frequency at 5.5 Mc/s.

Connect the Voltohmyst D.C. probe to pin 1 of V103 and set the range switch at +5 volts D.C.

Adjust the following transformers for a peak output, reducing the input so that the Voltohmyst maintains a reading of +5 volts. T102 secondary (bottom core)*, T102 primary (top core)†, T101 (bottom core)* and T206 (bottom core).*

Disconnect the Voltohmyst probe from V103 and connect it to the junction of R106 and C110.

Re-adjust T102 secondary core for zero voltage reading on the Voltohmyst. The voltage, before re-adjusting, should lie between +0.5 and —0.5 volts.

VIDEO I.F. ALIGNMENT

Connect a source of —5 volts D.C. bias to the junction of R201 and C204.

Turn the A.G.C. control to the extreme clockwise position.

Connect the Voltohmyst D.C. probe to pin 2 of V206 (Video Amplifier).

Connect the output of the calibrator to the tuner (TP2) through a 1000 pF capacitor using short leads. Set the tuner on Channel 6. Set the fine tuning control to its mechanical centre and check that the oscillator frequency is 211.25 Mc/s. ± 0.5 Mc/s.

Adjust the calibrator to the frequencies shown and adjust the following transformers for a peak output, reducing the input so that the Voltohmyst maintains a reading of approximately —3 volts.

33.5 Mc/s ..... T204 (bottom core)*

35.3 Mc/s ..... T203 (bottom core)*

31.9 Mc/s ..... T202 (bottom core)*

Adjust the calibrator to the frequencies shown and adjust the following for a minimum output, increasing the input to maintain an output of approximately —1 volt.

28.5 Mc/s ..... L202 (bottom core)*

30.5 Mc/s ..... T201 trap (top core)†

37.5 Mc/s ..... L201 (bottom core)*

Disconnect the Voltohmyst.

Connect the C.R.O. to pin 2 of V206 (Video Amplifier) using the network shown in Fig. 4.

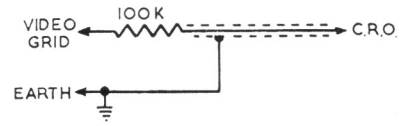

FIG. 4

Connect the sweep generator to pin 1 of V204 (4th Video I.F.). Set the output from the sweep generator at its maximum.

Adjust T205 primary (top core)† and secondary (bottom core)* so that the 36 Mc/s. marker falls at 85% response and the curve is flat topped. The required response is shown in Fig. 5.

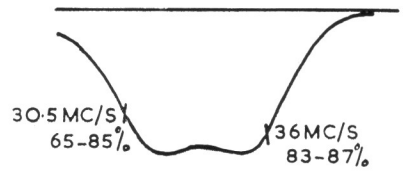

FIG. 5

Connect the sweep generator to the aerial input terminals of the matching unit. Use a 4-pin plug for this purpose and keep the leads to the termination of the sweep output cable very short. It is advisable to have on hand a special cable for connection from tuner to sweep generator with a resistive pad (Fig. 12) having balanced connections, direct to the plug.)

Connect a bias source to the A.G.C. terminal of the tuner and set the bias to —3 volts. The I.F. bias remains at —5 volts. Connect the vertical input of the C.R.O. direct to TP1 on the tuner with a shielded lead. Earth the shield at the tuner.

Set the sweep generator on channel 6.

Check that the R.F. response as viewed on the C.R.O. conforms with that shown in Figs. 13 and 14.

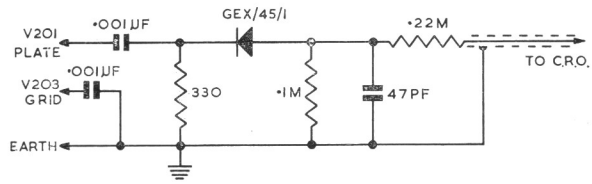

FIG. 6 – LINK CIRCUIT JIG.

Connect the "Link Circuit" jig (Fig. 6) to the chassis next to T203. Connect the crystal lead to pin 5 of V201 (1st Video I.F.) and the "earthy" lead to pin 1 of V203 (3rd Video I.F.). Connect the C.R.O. to the output of the crystal probe.

Loosely couple the calibrator to the plate of V201 making sure that this connection does not change the output waveform.

Set the sweep generator output to give 0.1 volts p/p output on the C.R.O. This corresponds to max. sensitivity on the A.W.A. C.R.O. A56031.

Reduce the capacitance of trimmer C201 to a minimum. Adjust T201 secondary (bottom core)* and T2 core (tuner)* for a round topped response with the 36 Mc/s. marker at 80%. T2 affects the marker position whilst T201 affects the tilt of the response top. Increase the capacitance of C201 to give the 31.75 Mc/s. marker at 70%. Repeat this series of adjustments, if necessary, to give the response curve shown in Fig. 7.

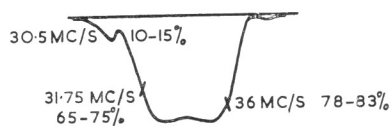

FIG. 7

Remove the "Link Circuit" jig from the chassis and reconnect the C.R.O. to pin 2 of V206 (Video Amplifier).

Loosely couple the calibrator into the I.F. amplifier by connecting it to the I.F. input shield making sure that the output waveform is unchanged by the connection.

View the overall response with 5 volts peak to peak output and re-adjust T204, T203 and T202 if necessary, to give the 36 Mc/s. marker at 45%, the 31.75 Mc/s. marker at 60% and a flat topped response. Increase the C.R.O. gain 10 times and check that the accompanying sound (30.5 Mc/s.) lies between 2% and 4%. The required overall response is shown in Fig. 8.

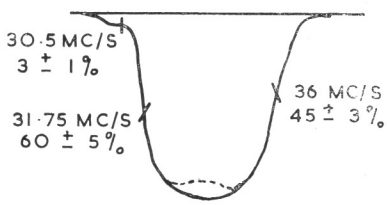

FIG 8

VIDEO I.F. ALIGNMENT

NOTE: All models with "Y" stamped on the back of the chassis are aligned in the following manner. (See circuit page for electrical modifications on this model.)

Connect a source of —5 volts D.C. bias to the junction of R201 and C204.

Turn the A.G.C. control to the extreme clockwise position.

Connect the Voltohmyst D.C. probe to pin 2 of V206 (Video Amplifier).

Connect the output of the calibrator to the tuner (TP2) through a 1000 pF capacitor using short leads. Set the tuner on Channel 6. Set the fine tuning control to its mechanical centre and check that the oscillator frequency is 211.25 Mc/s. ± 0.5 Mc/s.

Adjust the calibrator to the frequencies shown and adjust the following transformers for a peak output, reducing the input so that the Voltohmyst maintains a reading of approximately —3 volts.

33.5 Mc/s ..... T204 (bottom core)*
35.3 Mc/s ..... T203 (bottom core)*
31.9 Mc/s ..... T202 (bottom core)*

Adjust the calibrator to the frequencies shown and adjust the following for a minimum output, increasing the input to maintain an output of approximately —1 volt.

28.5 Mc/s ..... T201 trap (top core)†
30.5 Mc/s ..... L202 (bottom core)*
37.5 Mc/s ..... L201 (bottom core)*

Disconnect the Voltohmyst.

Connect the C.R.O. to pin 2 of V206 (Video Amplifier) using the network shown in Fig. 4.

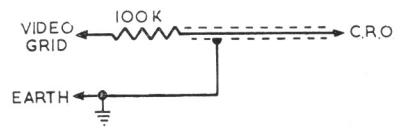

FIG. 4

Connect the sweep generator to pin 1 of V204 (4th Video I.F.). Set the output from the sweep generator at its maximum.

Adjust T205 primary (top core)† and secondary (bottom core)* so that the 36 Mc/s. marker falls at 85% response and the curve is flat topped. The required response is shown in Fig. 5.

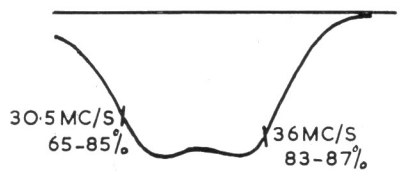

FIG. 5

Connect the sweep generator to the aerial input terminals of the matching unit. Use a 4-pin plug for this purpose and keep the leads to the termination of the sweep output cable very short. It is advisable to have on hand a special cable for connection from tuner to sweep generator with a resistive pad (Fig. 12) having balanced connections, direct to the plug.)

Connect a bias source to the A.G.C. terminal of the tuner and set the bias to —3 volts. The I.F. bias remains at —5 volts. Connect the vertical input of the C.R.O. direct to TP1 on the tuner with a shielded lead. Earth the shield at the tuner.

Set the sweep generator on channel 6.

Check that the R.F. response as viewed on the C.R.O. conforms with that shown in Figs. 13 and 14.

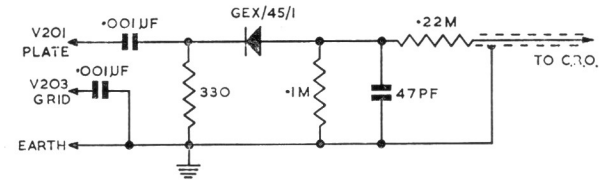

FIG. 6 – LINK CIRCUIT JIG.

Connect the "Link Circuit" jig (Fig. 6) to the chassis next to T203. Connect the crystal lead to pin 5 of V201 (1st Video I.F.) and the "earthy" lead to pin 1 of V203 (3rd Video I.F.). Connect the C.R.O. to the output of the crystal probe.

Loosely couple the calibrator to the plate of V201 making sure that this connection does not change the output waveform.

Set the sweep generator output to give 0.1 volts p/p output on the C.R.O. This corresponds to max. sensitivity on the A.W.A. C.R.O. A56031.

Reduce the capacitance of trimmer C201 to a minimum. Adjust T201 secondary (bottom core)* and T2 core (tuner)* for a round topped response with the 36 Mc/s. marker at 80%. T2 affects the marker position whilst T201 affects the tilt of the response top. Increase the capacitance of C201 to give the 31.75 Mc/s. marker at the low-frequency peak of the response. Repeat this series of adjustments, if necessary, to give the response curve shown in Fig. 7.

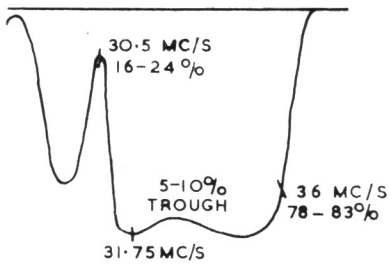

FIG 7

Some tilt may be necessary to keep the trough within the limits of 5-10%, but this tilt should not exceed 15%.

Remove the "Link Circuit" jig from the chassis and reconnect the C.R.O. to pin 2 of V206 (Video Amplifier).

Loosely couple the calibrator into the I.F. amplifier by connecting it to the I.F. input shield making sure that the output waveform is unchanged by the connection.

View the overall response with 5 volts peak to peak output and re-adjust T204, T203 and T202 if necessary, to give the 36 Mc/s. marker at 45%, the 31.75 Mc/s. marker at 70% and a flat topped response. Increase the C.R.O. gain 10 times and check that the accompanying sound (30.5 Mc/s.) lies between 2% and 4%. The required overall response is shown in Fig. 8.

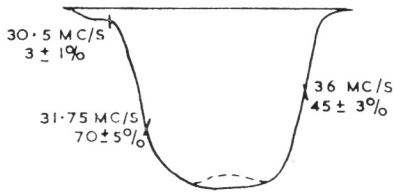

FIG. 8

TUNER ALIGNMENT

NOTE: More recent receivers are equipped with tuners with the aerial matching unit mounted on a bakelite plate within the body of the tuner. Refer to the 207-C, 209-C Service Manual for alignment and layout information on this type.

A tuner unit which is completely out of alignment, due to most unusual circumstances, should be re-aligned by carrying out the procedure listed below in correct order. In cases where only slight re-adjustment is necessary, due to component or valve failure, the tuned circuits associated with them need only be re-adjusted. In such cases, follow the appropriate procedure.

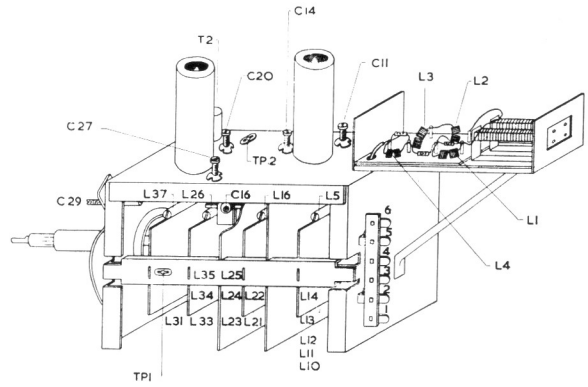

FIG 9A—TUNER ADJUSTMENTS

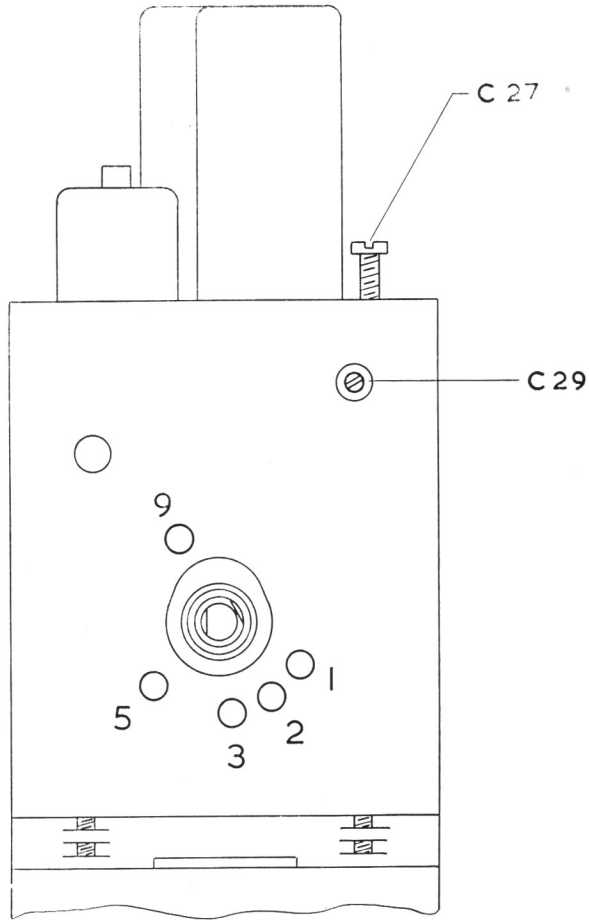

FIG. 9B OSCILLATOR ADJUSTMENTS

ALIGNMENT OF AERIAL MATCHING UNIT

The aerial matching unit is accurately aligned at the factory and no adjustment of the unit should be attempted in the customer's home, since slight mis-adjustment may cause serious attenuation of the signal, especially on channel 1. The R.F. unit is aligned with a particular matching unit in place and if for any reason a new matching unit is installed, the R.F. unit should be re-aligned.

To align the aerial matching unit, disconnect C7 from the junction of C3 and L4. Remove the aerial matching unit from the tuner and clip it to the side of the chassis. Connect the output of the aerial matching unit, via a 1000 pF capacitor, to pin 1 of V202, keeping the leads as short as possible.

Remove the 1st Video I.F. valve (V201).

Connect a variable bias source to the junction of R201 and C204 and set the bias to approximately —5 volts. Connect the A.W.A. television calibrator to the aerial input socket (with 72 ohms connections) and adjust its output, until a convenient output is measured at the grid of V206. This convenient output may be negative D.C. volts if measured with the A.W.A. Voltohmyst, or 400 cycle modulation observed on the C.R.O. if a modulated signal is used. Tune the calibrator to 36.0 Mc/s and adjust the inductance of L1 and L4, by varying the distance between turns, for a minimum output indication.

Remove the 1000 pF capacitor, bias and replace V201.

Connect a 300 ohm ½ watt composition resistor from the junction of C3 and L4 to earth with short leads.

Connect the C.R.O. low capacitance crystal probe across the 300 ohm resistor and turn the C.R.O. gain to maximum.

Connect the sweep generator to the matching unit aerial terminals with the 300 ohm line plug connections. To prevent coupling reactance from the sweep generator into the matching unit, it is advisable to connect a resistance pad (Fig. 10), constructed with short leads, to the input terminals.

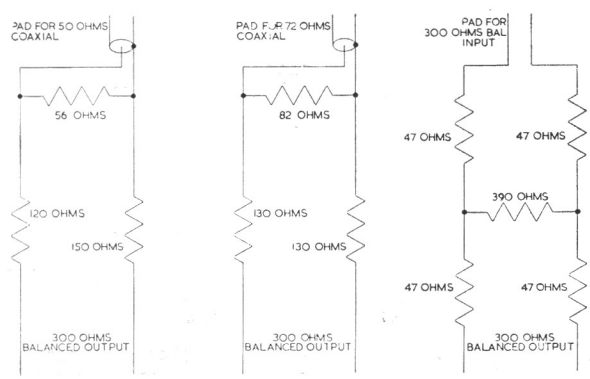

FIG. 10—SWEEP ATTENUATOR PADS

Connect the calibrator loosely to the matching unit terminals. It will be found convenient to use the pad in Fig. 12 for this purpose.

Set the sweep generator to sweep from 42—52 Mc/s. This may be achieved with the A.W.A. Sweep Generator Type A56036 by switching the generator to channel 1 and screwing the core in several turns.

Adjust L2 and L3 to obtain the response shown in Fig. 11. (Note that adjustment to L3 affects the shoulder of the response curve, whilst L2 affects the position of the 46.5 Mc/s point.)

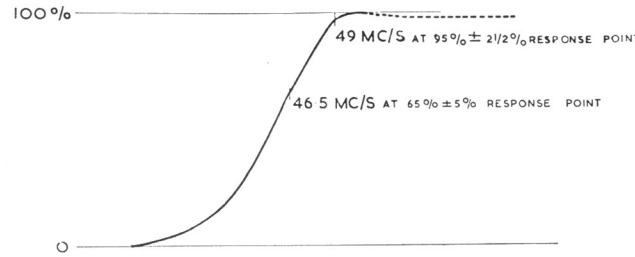

FIG. 11—AERIAL MATCHING UNIT RESPONSE

Remove the 300 ohm resistor, crystal probe connections, seal L1, L2, L3 and L4 in position and replace covers.

Re-connect C7 to the junction of C3 and L4.

R.F. ALIGNMENT

For complete tuner alignment the tuner must be removed from the receiver. Disconnect the co-axial lead from the I.F. transformer at the junction of C201 and T201. Extension leads for B+, Filament and Earth connections to the tuner will be required. For final adjustment of oscillator frequencies, the procedure for adjustment of the oscillator with covers in position may be carried out with the tuner mounted in its normal position.

COMPLETE R.F. ALIGNMENT

Remove cover from tuner.

Connect the sweep generator to the aerial input terminals of the matching unit. Use a 4 pin plug for this purpose and keep the leads to the termination of the sweep output cable very short. (It is advisable to have on hand a special cable for connection from tuner to sweep generator with a resistive pad (Fig. 12) having balanced connections, direct to the plug.)

Connect a bias source to the A.G.C. terminal of the tuner and set the bias to —3 volts while making all adjustments for correct responses. Connect the vertical input of the C.R.O. direct to TP1 on the tuner with a shielded lead. Earth the shield at the tuner.

Terminate the inner connector of the I.F. co-axial cable with a 47 ohm composition resistor.

Adjust C29 if necessary such that the end of the core is level with the outer sleeve when the fine tuning control is turned to the extreme clockwise position.

Switch on the receiver or power supply to the tuner and carry out the following adjustments with the correct voltages: 265V H.T., 6.3V Filament and—3V Bias.

Switch to channel 6 and turn the fine tuning control to the middle of its range.

Loop an insulated wire from the R.F. input terminal of the calibrator around the 6U8 valve with its cover removed.

Switch to channel 10 and adjust L37 to give oscillator frequency of 246.25 Mc/s.

Switch to channel 9 and adjust L38 to give oscillator frequency of 232.25 Mc/s.

Switch to channel 6 and re-adjust C27, if necessary, to 211.25 Mc/s.

Repeat the above procedure until no adjustment is necessary for correct oscillator frequencies on channels 10, 9 and 6 within ± 0.3 Mc/s. Channel 8 and 7 have no separate frequency adjustment, but the frequency will be found to be 225.25 Mc/s and 218.25 Mc/s ± .3 Mc/s respectively, if adjustments of 10, 9 and 6 frequency are carried out correctly. Make sure that the presence of the insulated wire loop from the calibrator does not change the frequencies.

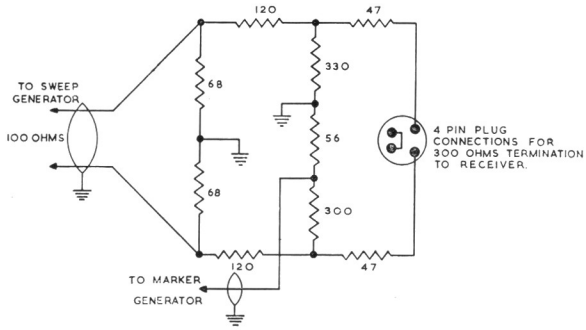

FIG 12 — INPUT PAD

Connect the calibrator to the input pad from the sweep generator as shown in Fig. 12.

Switch the tuner and sweep generator to channel 6 and adjust the output to give a response pattern on the C.R.O. Detune the core of T2 (convertor I.F. transformer) when adjusting response curves until no variation of curve is observed on the C.R.O. Adjust C11, C14, C16 and C20 for correct response shape, with markers, from calibrator at video and sound carrier frequencies, correctly placed on the response curve. Be sure that the pattern shown on the C.R.O. is not disturbed by a 50 c/s pick-up. A direct earth strap between tuner, C.R.O. and power supply will eliminate this interference.

The correct adjustment of C11 is indicated by maximum amplitude at a frequency midway between video and sound markers. C16 is adjusted for the required bandwidth on top of the response curve. C20 affects the frequency of the response mainly and C14 the symmetry. C11 also affects symmetry and tilt but should always be adjusted for the maximum output in the centre.

Switch the tuner and sweep generator to channel 10 and adjust the calibrator to give video and sound markers. Adjust L5 for maximum output between video and sound markers and L26, L16 for correct curve. L16 affects mainly the frequency of the response and L26 the symmetry.

Return to channel 6 and observe the response curve. If re-adjustment is necessary, repeat the procedure contained in the previous three paragraphs, until correct response is obtained on channels 6 and 10 without recourse to adjustment. Observe the responses on channels 9, 8 and 7 which should be within the tolerances shown in Fig. 13.

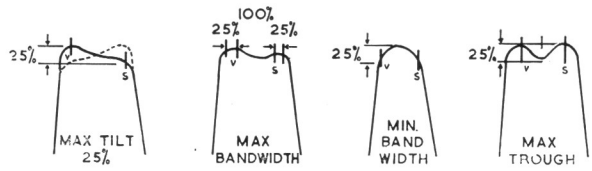

FIG. 13—RESPONSE CURVE TOLERANCES, ALL CHANNELS

Re-check the oscillator frequency adjustment as in the first paragraph of this section. If re-adjustment is necessary, check the response curves of channels 10 and 6. Re-adjust if necessary.

Then proceed as follows:

Switch to channel 5 and adjust screw in L42 to give oscillator frequency of 176.25 Mc/s.

Switch to channel 3 and adjust screw in L44 to give oscillator frequency of 122.25 Mc/s.

Switch to channel 2 and adjust screw in L45 to give oscillator frequency of 100.25 Mc/s.

Switch to channel 1 and adjust screw in L46 to give oscillator frequency of 86.25 Mc/s.

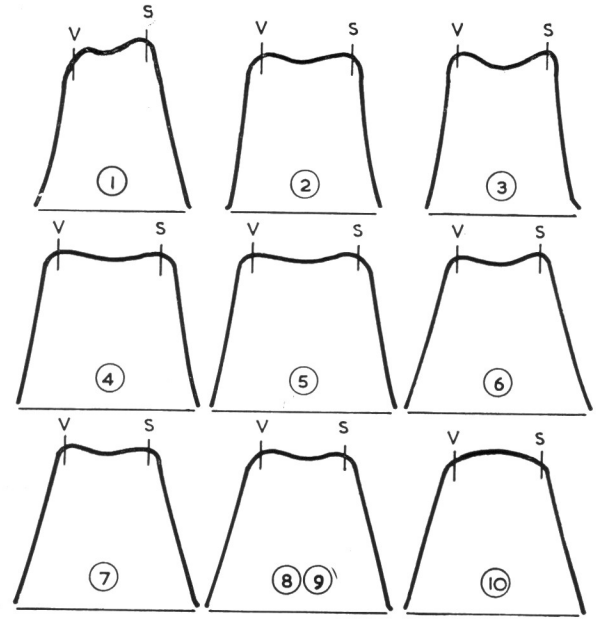

FIG. 14
TUNER RESPONSE CURVES

Switch tuner and sweep generator to channel 5 and spread or close turns of L21 and L31 to give correct curve as shown in Fig. 14. Adjust L10, in the R.F. amplifier grid circuit for maximum response in the centre of the channel. L21 affects the frequency of the response mainly and L31 the symmetry.

Switch to channel 4 and if necessary adjust L22 and L11 for correct response.

Switch to channel 3 and spread or close the turns of L23 and L33 to give approximately the correct response. Spread or close the turns of L12, in grid circuit, for maximum response at the centre frequency which corresponds to the minimum hollow in the top of the curve.

Switch to channels 2 and 1 in turn and adjust—

L24, L34, L13 on channel 2

L25, L35, L12 on channel 1

for correct response curve.

Re-check response curves of channels 10 and 6, and re-adjust C14, C20, L16, L26 if necessary. Then re-check response curves of channels 5, 4, 3, 2 and 1.

FINAL OSCILLATOR ADJUSTMENT

Replace the cover on the tuner unit and with the calibrator R.F. input lead looped around the 6U8 valve, re-adjust C27 on channel 6, L37 on channel 10, L38 on channel 9 for the correct frequency when the fine tuning control is in its central position. Then re-adjust screws through the front of the tuner for correct frequencies on channels 5, 3, 2 and 1.

Check that the correct frequency on all channels is obtained without adjustments when the fine tuning control is rotated ± 45° from its centre position. Check that the oscillator injection voltage, measured with the Voltohmyst D.C. probe at TP2, is between 2.0 and 5.0 volts.

Make sure that the screws retaining the covers are firmly in position and that the covers are well fitted to maintain a low oscillator radiation.

SPECIAL NOTES

1. Always align with the correct bias of —3 volts which is an average figure of the A.G.C. potential.

2. The cover on the aerial matching unit must be in position whilst adjusting the tuner R.F. responses.

3. The cover of the tuner must be in position when making final adjustment to frequency of local oscillator.

4. Detune the core of T2 (converter I.F. transformer) when adjusting response curves until no variation of the curve is observed on the C.R.O.

HORIZONTAL OSCILLATOR ALIGNMENT

Normally the adjustment of the horizontal oscillator is not considered to be a part of the alignment procedure, but since the oscillator waveform adjustment may require the use of an oscilloscope, it usually can not be done conveniently in the field. The waveform adjustment is made at the factory and normally should not require re-adjustment in the field. However, the waveform adjustment should be checked whenever the receiver is aligned or whenever the horizontal oscillator operation is incorrect.

When no C.R.O. is available the horizontal oscillator may be aligned and checked as follows:

Tune in a station, if available, or, using a generator to provide the appropriate synchronising signals, synchronise the picture by adjusting the horizontal and vertical hold controls respectively. If the picture cannot be synchronised, short circuit the sine wave stabilising coil (L401) and then adjust the horizontal hold control until synchronisation is obtained. Remove the short circuit and adjust the core in L401 until the picture is again synchronised. If synchronisation is still unobtainable, adjust the horizontal hold control slowly, in conjunction with the core in L401, until the picture is synchronised.

Check for over-drive and make any necessary re-adjustments to the horizontal hold control or to the core in the sine wave stabilising coil.

To check if the correct adjustment has been made, turn the horizontal hold control to the extreme clockwise position. The picture should be out of synchronisation, with a minimum of twelve bars slanting downwards to the left. Turn the control slowly anti-clockwise. The number of diagonal black bars will be gradually reduced and when only 1½ to 3 bars sloping downward to the left are obtained, the picture will synchronise upon slight additional anti-clockwise rotation of the control. The picture should remain in synchronisation for approximately two full turns of additional anti-clockwise rotation of the control. Continue turning the control anti-clockwise until the picture falls out of synchronisation. Rotation beyond the "fall-out" position should produce between 2 and 5 bars before motorboating occurs. Motorboating should be reached before the control reaches the extreme anti-clockwise position.

If an oscilloscope is available, the procedure is as follows:

Connect the low capacity probe of the C.R.O. to the terminal of L401 which is connected to C406 and R408. Dress the probe at least one inch away from the sine wave coil (L401). Turn the horizontal hold control so that the picture is in synchronisation. The pattern on the C.R.O. should be as shown in Fig. 15A. If not, adjust the sine wave coil until nominal waveform, as shown, is obtained. Remove the C.R.O. on completion of this adjustment.

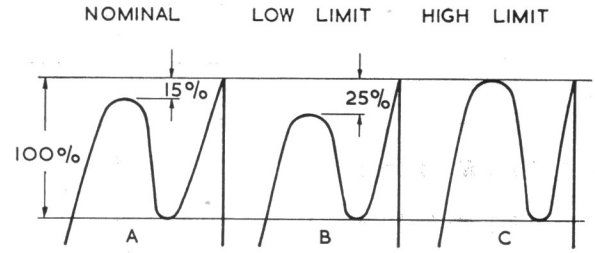

FIG. 15—HORIZONTAL OSCILLATOR WAVE FORMS

When the receiver passes the above checks and the picture is normal and stable, the horizontal oscillator is properly aligned.

SENSITIVITY CHECK

A comparative sensitivity check can be made by operating the receiver on a weak signal from a television station and comparing the picture and sound obtained to that obtained on other receivers under the same conditions.

This weak signal can be obtained by connecting the service department aerial to the receiver through a ladder type attenuator pad. The number of stages in the pad depends upon the signal strength available at the aerial. A sufficient number of stages should be inserted so that a somewhat less than normal contrast picture is obtained when the contrast control is in the extreme clockwise position. Only carbon type resistors should be used to construct the pad.

A.G.C. CONTROL ADJUSTMENT

Disconnect all test instruments except the oscilloscope which should be connected to pin 7 of V206.

Connect an aerial to the receiver aerial terminals.

Turn the A.G.C. control to the extreme anti-clockwise position.

Tune in a strong signal and adjust the oscilloscope to see the video waveform.

Turn the A.G.C. control clockwise until the tips of sync. begin to be compressed and then anti-clockwise until no compression is obtained.

RESPONSE CURVES

The response curves referred to throughout the alignment procedure were taken from a production set, but some variations can be expected.

CRITICAL LEAD-DRESS

1. All leads in the video I.F., sound I.F. and video circuits to be as short as possible.

2. Any non-insulated carbon resistors to be dressed so as to avoid possible contact with the chassis or other components.

3. Bypass capacitor (C105) under sound I.F. shield to be laid in such a way as to avoid a short to shield.

4. The following components in the video amplifier stage to be kept clear of the chassis and other metal parts in order to avoid excessive stray capacitances: C228, C229, C232, L206, L207, L208, R224, R229.

5. High voltage capacitors C416, C417, C418 and C419 to be dressed so as to avoid possible breakdown to chassis or other components.

6. High voltage leads to the plate of V402 and the side connection of the kinescope to be dressed as far from adjacent metal parts as possible.

7. All high voltage (16KV) wiring and connections to be kept free of sharp spikes and discontinuities likely to cause corona.

8. Any high wattage resistors (wire wound) to be dressed clear of other components which may be damaged because of fairly high body temperature.

9. Dress power leads away from the volume control and 6AV6 input circuit.

10. When the chassis is mounted in the cabinet, keep the lead to the cathode of the kinescope dressed clear of the metal parts of the chassis and the high voltage yoke leads.

D.C. RESISTANCE OF WINDINGS

WINDING		D.C. RESISTANCE IN OHMS
Tuner Windings		*
L201	37.5 Mc/s Trap	*
L202	28.5 Mc/s Trap	*
L203	I.F. Filter Choke	*
L204	Video Detector Filter Choke	3
L205	Video Detector Peaking Coil	7.5
L206	5.5 Mc/s Trap	1.5
L207	Video Amplifier Shunt Peaking Coil	12
L208	Video Amplifier Series Peaking Coil	6
L401	Horizontal Sine Wave Coil	45
L402	Horizontal Linearity Coil	19
L403	H.T. Choke	*
L404	Width Coil	
	Red—T402	12
	Red—R417	3.3
L405	Deflection Yoke	22
L406	Deflection Yoke	22
L407	Deflection Yoke	15
L408	Deflection Yoke	15
L409	Filter Choke	40
T101	Sound I.F. Transformer	1
T102	Ratio Detector Transformer	
	Primary	8
	Secondary	*
T103	Audio Output Transformer	
	Primary	380
	Secondary	*
T201	I.F. Link Transformer	
	Primary	*
	Secondary	*
T202	1st Video I.F. Transformer	
	Primary	*
	Secondary	*
T203	2nd Video I.F. Transformer	
	Primary	*
	Secondary	*
T204	3rd Video I.F. Transformer	
	Primary	*
	Secondary	*
T205	4th Video I.F. Transformer	
	Primary	*
	Secondary	*
T206	Sound Take Off Transformer	
	2—3	1.6
	1—3	4.7
T301	Vertical Oscillator Transformer	
	Primary (Grid)	450
	Secondary (Cathode)	130
T302	Vertical Output Transformer	
	Primary	550
	Secondary	14
T401	Horizontal Blocking Oscillator Transformer	
	YE—Anode	23
	YE—C405	60
T402	Horizontal Output Transformer	
	1—2	4
	2—3	20
	3—4	9.5
	4—5	12
	5—Anode	300
T403	Power Transformer	
	Primary	7
	Secondary	45

* Less than 1 ohm.

The above readings were taken on a standard chassis, but substitution of materials during manufacture may cause variations and it should not be assumed that a component is faulty if a slightly different reading is obtained.

MECHANICAL REPLACEMENT PARTS

Description.	Part No.	Code No.
MAIN CHASSIS:—		
Anode Cap. H.V. Rectifier		188011
Anode Cap. and Lead. Horizontal Output	40044	
Base, Tuner Mounting	40727	
Bracket, Chassis. Rear Mounting	40201	
Bracket, Chassis. Side Mounting	40214	
Bracket, Width and Linearity Coils	40213	
Cable, Volume Control	49711	
Clip, Bakelite Mounting		211019
Clip, Chassis Mounting		211022
Connector, Kinescope Ultor	40018	
Coupling, Contrast Control	40206	
Cover, Power Transformer	40025	
Dial Lamp Holder	4195	
Dial Lamp Holder Spring	25773	
Fuse Holder (B+)	40209	
Fuse Holder (Mains) Screw out		400024
Fuse Holder (Mains) Pull out	40845	
Insulator, Contrast Control Mounting	40725	
Insulator, H.V. Rectifier Socket Mounting	40030	
Magnet, Centring	40405	
Magnet, Ion Trap	40247	
Plate, ON/OFF—Vol. Brightness	40200	
Plate, Preset Control Mounting	40196	
Plug, Speaker		481215
Retainer, Yoke	40243	
Screen, I.F. Input	40215	
Screen, Sound I.F.	40012	
Shield, H.V. Rectifier	40034	
Shield, Horizontal Output Transformer	40036	
Shield Cover, Horizontal Output Transformer	40037	
Socket, Kinescope		794598
Socket, 8 Pin Wafer		793036
Socket 7 Pin Less Register		794576
Socket, 7 Pin Less Register Mica Filled		794578
Socket, 7 Pin with Register		794574
Socket, 8 Pin Mica Filled		794582
Socket, 9 Pin Mica Filled		794591
Spindle, Contrast Control Extension	40205	
Spring, Earthing Deflection Yoke	40564	
Spring, Contact. Chassis to Base Shield	40509	
Terminal Panel, Aerial	40411	
TUNER UNIT:—		
Tuner	40129	
Bracket, Support	40724	
Cable, Tuner to I.F.	49714	
Cover, Main Body	40152	
Cover, Front	40153	
Pin Jack Assembly	27685	
Terminal Panel Assembly	40612	

Description.	Part No.	Code No.
FINE TUNING ASSEMBLY:—		
Detent Mech. Assembly	40144	
Guide, Fine Tuning Spring	40140	
Lever Assembly	40165	
Retainer, Spring. Fine Tuning	40141	
Spring, Fine Tuning	40502	
Spring, Lever	40500	
Spring, Wiper	40507	
MISCELLANEOUS:—		
Bracket, Control Box Mounting	40292	
Cabinet, 204-T-TY	28141	
Cabinet, 204-TX-TW	37752	
Cabinet, 205-C-CZ-CY	28146	
Cabinet, 205-CX-CW	37753	
Cabinet, 206-C-CZ-CY	28147	
Clamp, Baffle (204-T)	40728	
Control Box Assembly	40289	
Cover, Kinescope Base	40732	
Cradle, Strap Assembly L.H.	40745	
Cradle, Strap Assembly R.H.	40746	
Dust Seal, Kinescope	40731	
Glass Retainer. Top	40715	
Glass Retainer. Bottom	40717	
Hood Assembly	40712	
Hood Cushion	40714	
Hood Support	40707	
Hood Support Stud	40238	
Knob Assembly, Brightness	40229	
Knob Assembly, Channel Selector	40733	
Knob Assembly, Fine Tuning	40226	
Knob Assembly, ON/OFF Volume	40228	
Knob, Horizontal Hold	40197	
Plate, Speaker Mounting (204-T)	40264	
Mask, Kinescope	40713	
Retainer, Horizontal Hold Knob	40198	
Safety Glass	40701	
Strap, Earthing. Kinescope Mount to Chassis	40710	
Washer, Horizontal Hold Knob	40199	

SOCKET VOLTAGES

No signal input. A.G.C. maximum clockwise. All D.C. voltages measured with Voltohmyst. All voltages in Tuner (V1, V2) measured with Voltohmyst with 0.1 megohm resistor in series with the D.C. probe.

* Do not measure. † Measured with Voltohmyst fitted with high voltage probe.

NOTE: These voltages were taken on a typical chassis, but some variations should be expected on individual chasses.

Valve No.	Type and Function	Anode to Chassis		Screen Grid to Chassis		Cathode to Chassis		Control Grid to Chassis		Remarks
		Pin No.	Volts	Pin No.	Volts	Pin No.	Volts	Pin No.	Volts	
V1	6BQ7A R.F. Amplifier	6	250	—	—	8	130	7	128	
	R.F. Amplifier	1	130	—	—	3	1.2	2	0	
V2	6U8 Converter	6	120	3	120	7	0	2	—2 to —5	
	R.F. Oscillator	1	230	—	—	8	120	9	115	
V101	6AU6 1st Sound I.F.	5	132	6	132	7	0.75	1	—0.25	
V102	6AU6 2nd Sound I.F.	5	132	6	132	7	0	1	—2.4	
V103	6AL5 Ratio Detector	2	—8.5	—	—	5	2.2	—	—	
		7	2.3	—	—	1	8.6	—	—	
V104	6AV6 A.F. Amplifier	7	96	—	—	2	.03	1	—0.91	
V105	6AQ5 A.F. Output	5	253	6	268	2	11.9	7	0	
V201	6BA6 1st Video I.F. Amplifier	5	131	6	131	7	1.6	1	0	
V202	6CB6 2nd Video I.F. Amplifier	5	255	6	255	2	144	1	144	
V203	6CB6 3rd Video I.F. Amplifier	5	126	6	126	2	0.94	1	0	
V204	6CB6 4th Video I.F. Amplifier	5	205	6	137	2	1.6	1	0	
V205	6AL5 Video Detector	7	—0.91	—	—	1	0	—	—	
	A.G.C. Clamp	2	—0.1 to +0.4	—	—	5	0	—	—	
V206	12BY7 Video Amplifier	7	158	8	144	1	0.70	2	—0.86	
V207	21ALP4A Kinescope	Side Contact	15.5KV†	10	420	11	80	2	0 to 135	Pin 2—With variation of brightness control. Side contact—Zero Beam Current. **NOTE:** Pin 6 = 550V Focus Control maximum clockwise.
V301	6CB6 A.G.C. Amplifier	5	2 to 8	6	280	2, 7	135	1	35 to 50	
V302A	½6SN7GTA Vertical Sync. Separator	2	70	—	—	3	0	1	—6 to —12	
V302B	½6SN7GTA Horizontal Sync. Separator	5	280	—	—	6	140	4	125	
V303A	½6SN7GTA Sync. Amplifier	5	50	—	—	6	0	4	—1 to +1	
V303B	½6SN7GTA Vertical Oscillator	2	140	—	—	3	0	1	—34	With height and linearity controls adjusted for correct raster.
V304	6AQ5 Vertical Output	5	250	6	260	2	22	1	0	
V401	6SN7GTA Horizontal Control	2	280	—	—	3	1 to 10	1	—17	Oscillator frequency approx. 15,625 c/s.
	6SN7GTA Horizontal Oscillator	5	200	—	—	6	0	4	—90	
V402	6DQ6A Horizontal Output	Top Cap	5.6KV Peak*	4	160	8	9.5	5	—25	
V403	1B3GT High Voltage Rectifier	Top Cap	15.5KV Peak*	—	—	7, 2	15.5KV†	—	—	
V404	6AX4GT Damper	5	280	—	—	3	4.2KV Peak*	—	—	
V405	5AS4 Rectifier	4, 6	270 A.C.	—	—	2, 8	290	—	—	
V406	5AS4 Rectifier	4, 6	270 A.C.	—	—	2, 8	290	—	—	

Junction of C413 and C415, 680V D.C.

In some chassis, R415 was a 20K ohms 2 watt resistor
In some chassis, C111 was an 0.047 uF ± 10% 200V paper capacitor
In some chassis, C210 was a 470 pF + 100% — 0% Hi-K ceramic disc
In some chassis, C407 was an 0.001 uF ± 10% 1,000V paper capacitor
In some chassis, R408 was a 68K ohms ± 10% 1/2 watt resistor
In some chassis, C420 was a 150 pF 2.500V tubular capacitor
In some chassis, R421 was a 4.7K ohms ± 10% 1/2 watt resistor
In some chassis, T103 was No. 21147

Other changes incorporated since circuit was drawn:

C114: Changed from .0047 uF to .01 uF ± 10% 400V paper
C310: Changed from .0068 uF to .018 uF ± 10% 400V paper
C324: Changed from .0047 uF to .018 uF ± 10% 400V paper
C423: Added .1 uF ± 20% 600V paper across C231D
C424: Added .001 uF ± 10% 1,600V paper across R421
R307: Changed from 680K to 560K ± 10% ½ watt
R412: Changed from 820K to 1 megohm ± 10% 1 watt
R416: Changed from .47 ohm to 1.5 ohms ± 10% ½ watt

In the "Y" series the following modifications have taken place:—

C102: Changed from .01 uF to .0047 uF ± 10% 400V paper
C105: Changed from .01 uF to .0033 uF ± 10% 400V paper
T201: Coil 41041 now replaces previous 40072 type
C203: Changed from a 12 pF to a 5.6 pF ± 5% N.P.O. capacitor

The following components have been added:—

C233: 5.6 pF ± 5% N.P.O. ceramic (see circuit below)
R232: 47K ohms ± 10% ½ watt (see circuit below)
C234: .0047 uF Hi-K Disc (in parallel with C231A)
R122: 100 ohms ± 10% ½ watt from cathode V102 to earth

It has also been necessary to earth the I.F. input shield to the earth tag on the terminal strip containing I.F. A.G.C. point.

NOTE: All receivers incorporating the "Y" modification require a different video I.F. alignment procedure (see page 7).

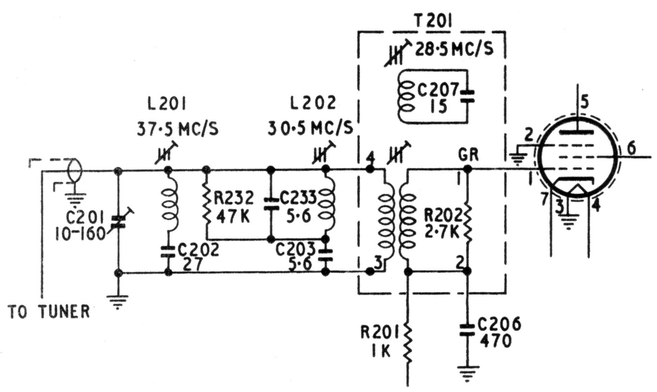

CIRCUIT A.W.A. TELEVISION RECEIVER MODELS 204T, 205C & 206C

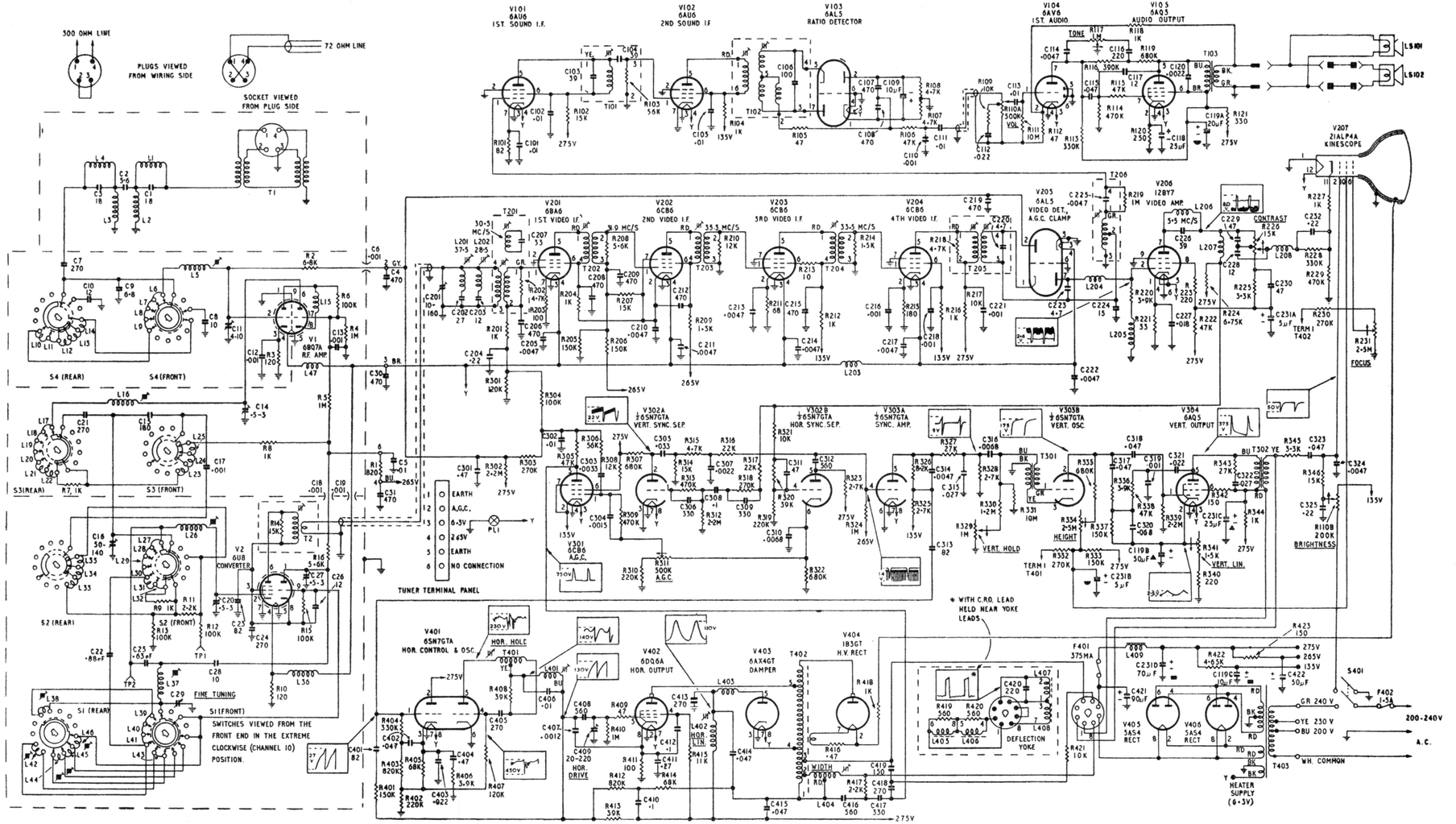

All voltages shown on waveforms measured with a Voltohmyst.

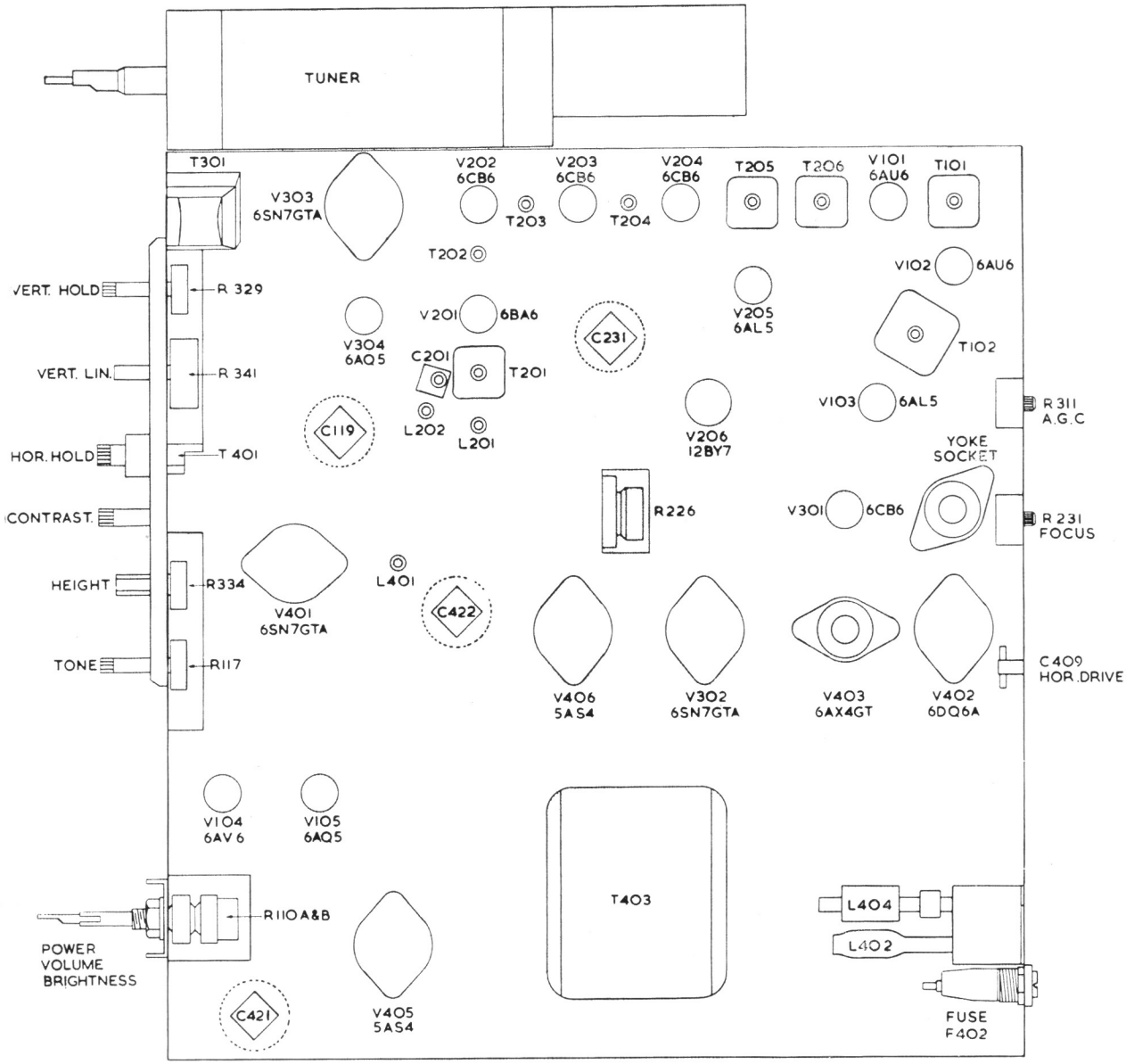

FIG. 17. UNDER CHASSIS ALIGNMENT ADJUSTMENTS

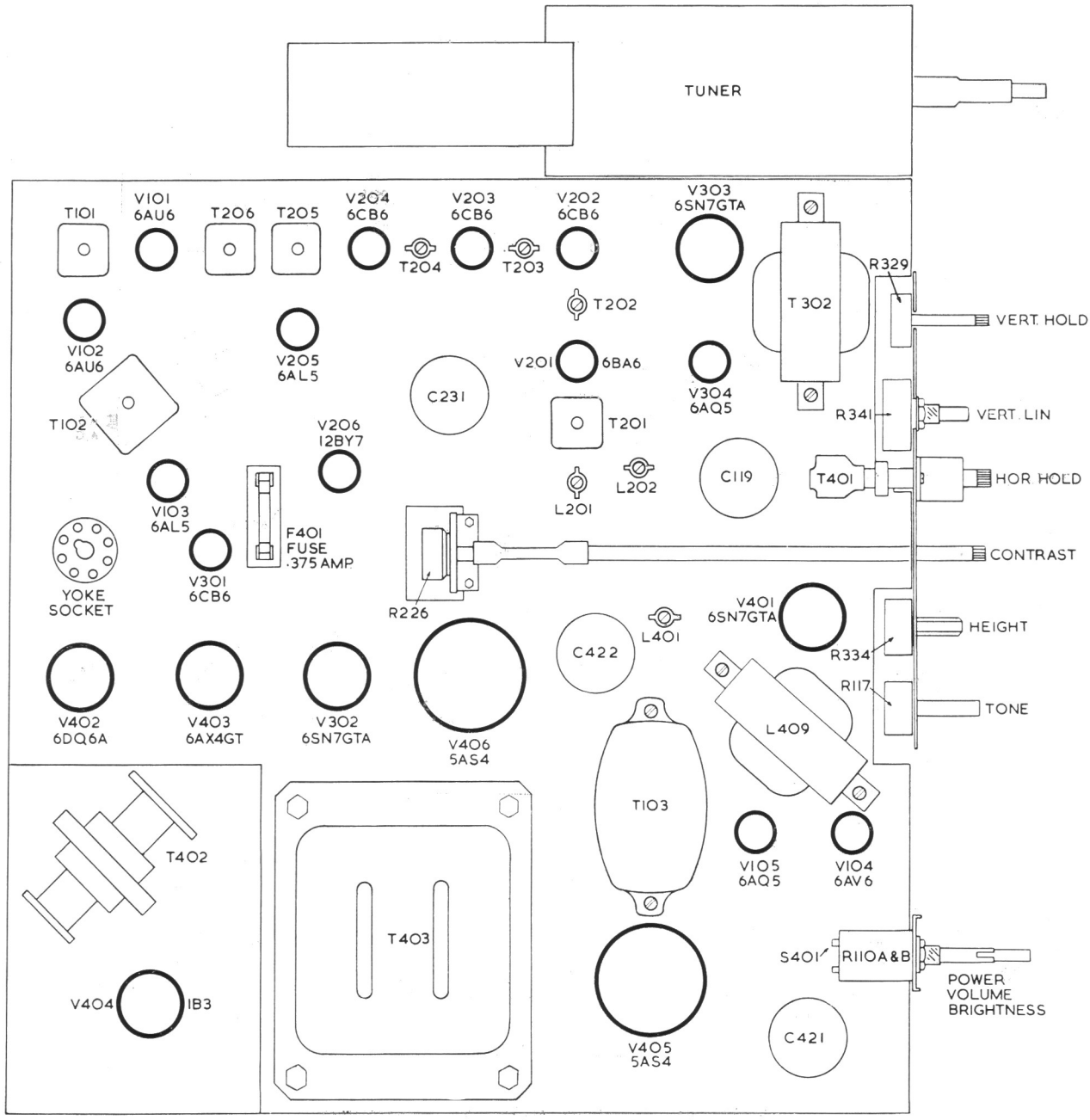

FIG. 18. TOP CHASSIS ALIGNMENT ADJUSTMENTS

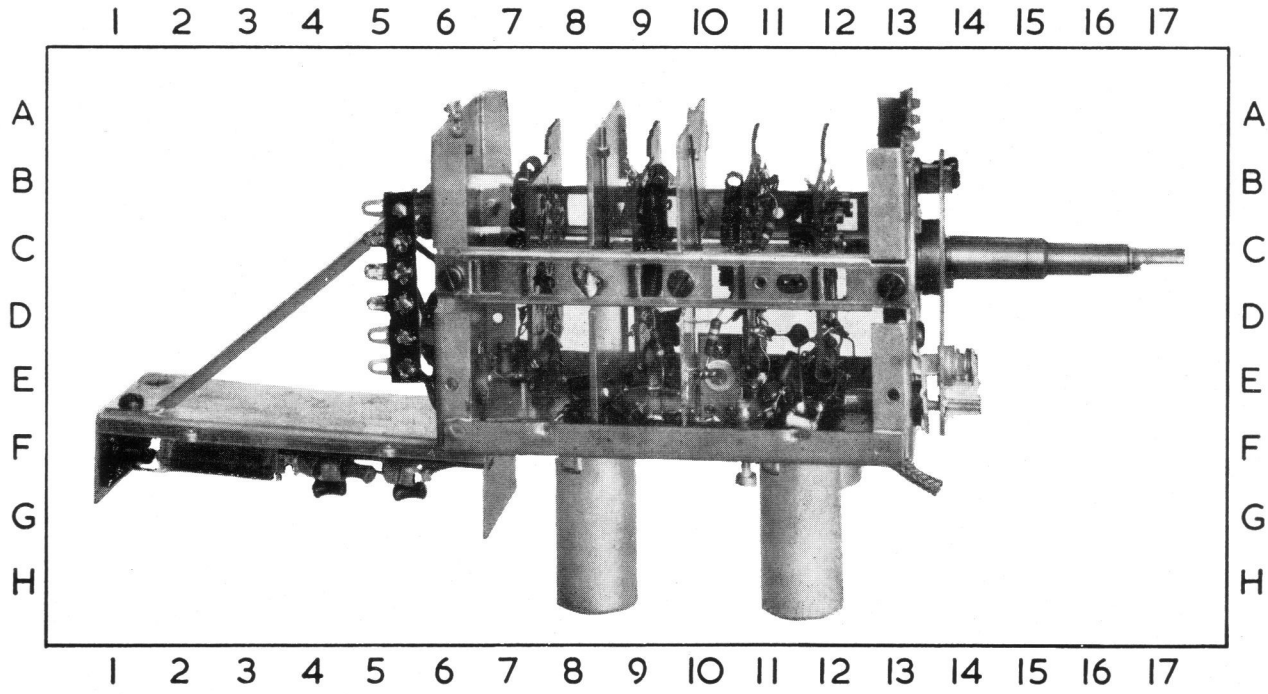

FIG.19
TUNER LAYOUT

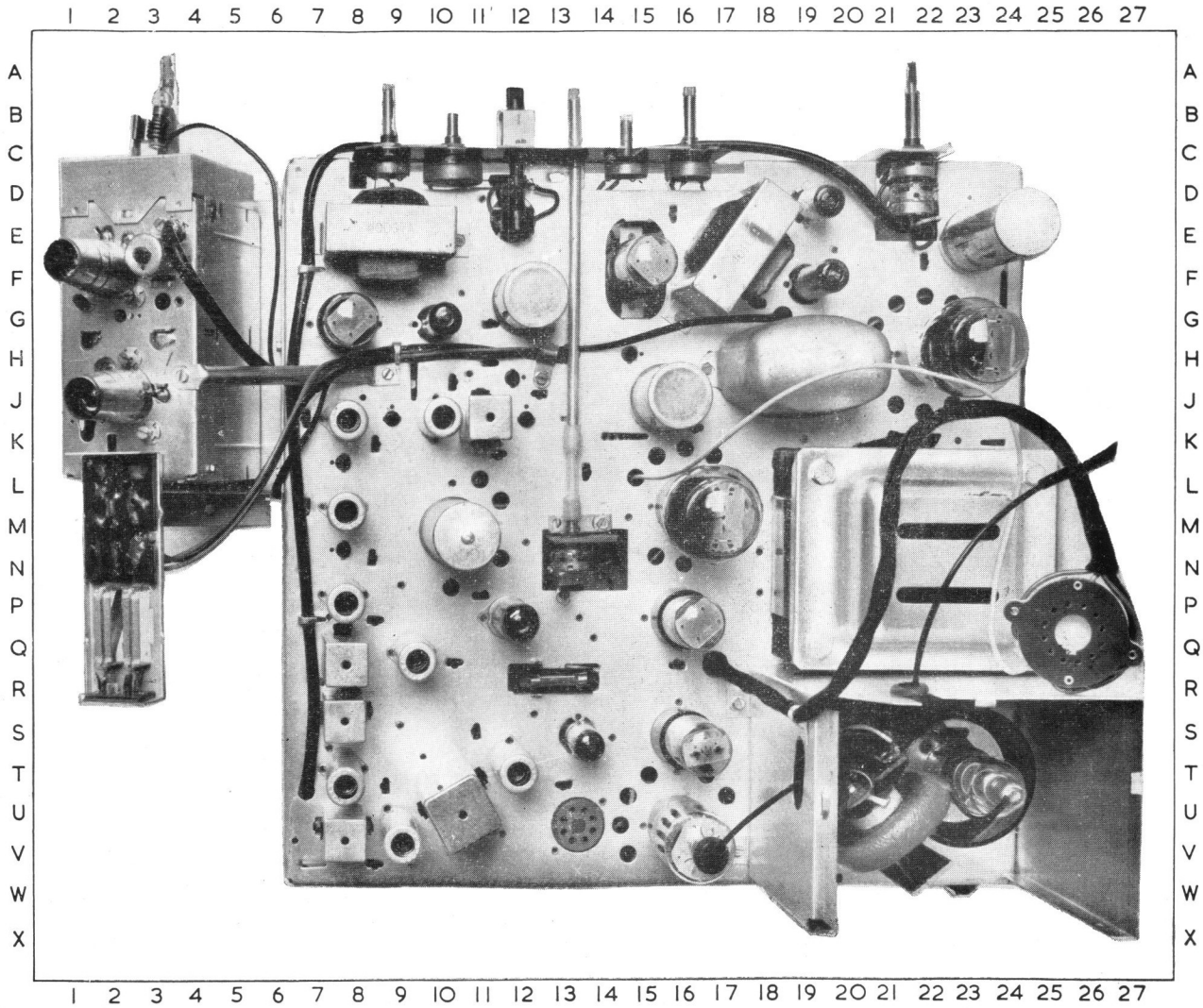

FIG. 20
TOP LAYOUT

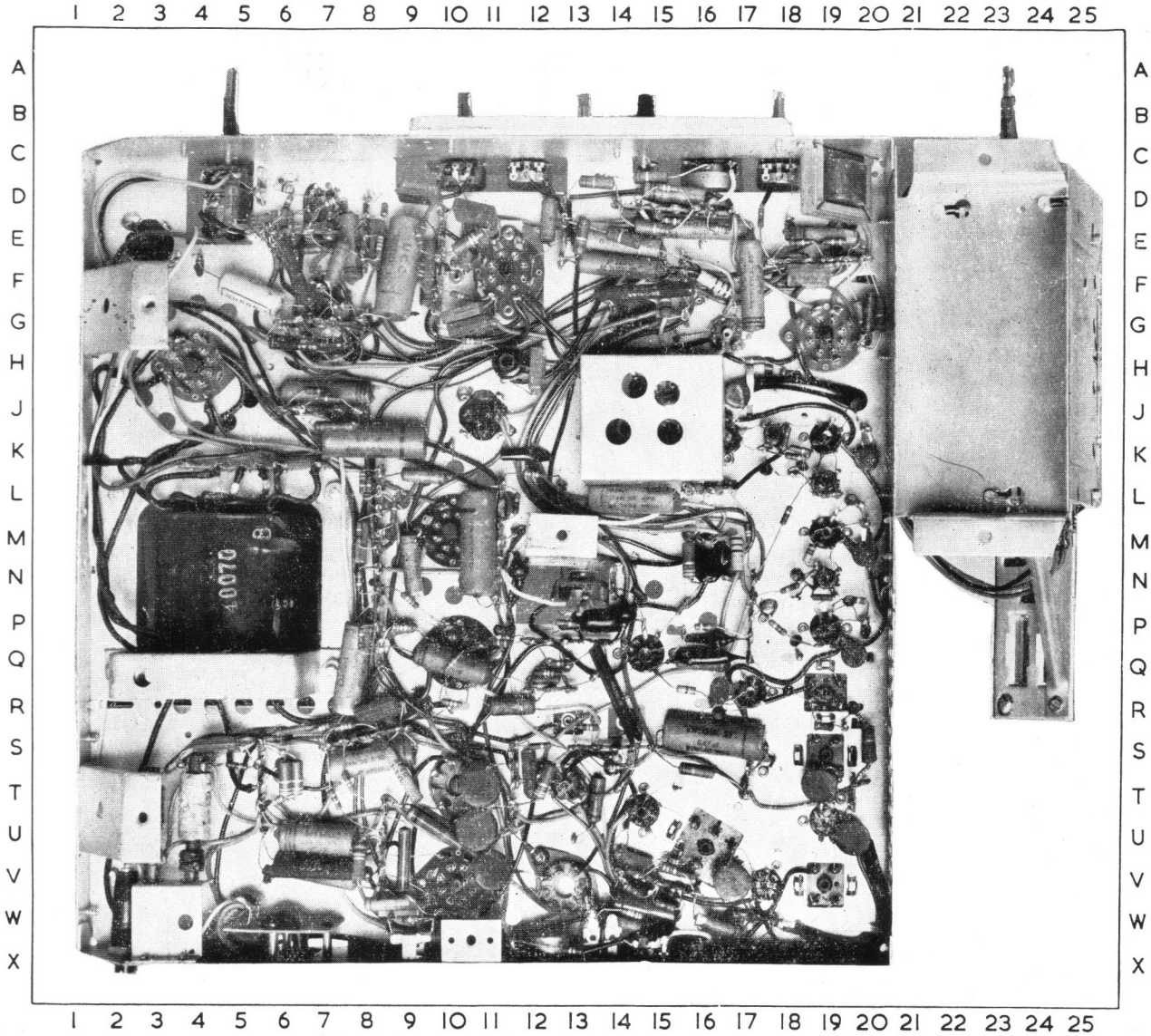

FIG. 21
BOTTOM LAYOUT

CIRCUIT CODE

CODE No.	DESCRIPTION	PART No.	FIG. No.	LOCATION
	INDUCTORS			
L1	Composite Filter Coils	40344	19	F4
L2		40345	19	F4
L3		40346	19	F5
L4		40347	19	F5
L5	Aerial Section Inductor	40300	19	E7
L6	Aerial Section Segment		19	D8
L7			19	C8
L8		40169	19	C8
L9			19	B8
L10	Channel 5 Aerial Section Inductor	40304	19	B7
L11	Channel 4 Aerial Section Inductor	40305	19	B7
L12	Channel 3 Aerial Section Inductor	40314	19	B7
L13	Channel 2 Aerial Section Inductor	40315	19	C7
L14	Channel 1 Aerial Section Inductor	40316	19	C7
L15	Interstage Coupling 6BQ7A	40108	19	E8
L16	6BQ7A Plate Section Inductor	40312	19	E9
L17	S3 Rear 6BQ7A Plate Section Segment		19	D9
L18			19	D9
L19		40169	19	C9
L20			19	C9
L21	Channel 5 6BQ7A Plate Sect. Inductor	40302	19	C9
L22	Channel 4 6BQ7A Plate Sect. Inductor	40303	19	B9
L23	Channel 3 6BQ7A Plate Sect. Inductor	40317	19	B9
L24	Channel 2 6BQ7A Plate Sect. Inductor	40318	19	C9
L25	Channel 1 6BQ7A Plate Sect. Inductor	40319	19	D9
L26	Converter Grid Section Inductor	40311	19	E11
L27	S2 Front Converter Grid Section Segment		19	E11
L28			19	D11
L29		40168	19	C11
L30			19	C11
L31	Channel 5 Converter Grid Sect. Inductor	40301	19	B11
L32	Channel 4 Converter Grid Sect. Inductor	40170	19	B11
L33	Channel 3 Converter Grid Sect. Inductor	40320	19	B10
L34	Channel 2 Converter Grid Sect. Inductor	40321	19	C10
L35	Channel 1 Converter Grid Sect. Inductor	40322	19	D10
L36	Oscillator Filament Choke	40107	19	E11
L37	Oscillator Section Inductor	40313	19	E12
L38	Channel 9 Oscillator Section Inductor	40310	19	D11
L39	Oscillator Section Segment		19	D12
L40		40167	19	C12
L41			19	C12
L42	Channel 5 Oscillator Sect. Inductor	40306	19	B12
L43	Channel 4 Oscillator Sect. Inductor	40182	19	B12
L44	Channel 3 Oscillator Sect. Inductor	40307	19	B12
L45	Channel 2 Oscillator Sect. Inductor	40308	19	C12
L46	Channel 1 Oscillator Sect. Inductor	40309	19	C12
L47	6BQ7A Filament Choke	40106	19	E9
L201	37.5 Mc/s. Trap	40073	20	J12
L202	28.5 Mc/s. Trap	40074	20	H12
L203	I.F. Filament Choke	40368	21	N20

CODE No.	DESCRIPTION	PART No.	FIG. No.	LOCATION
	INDUCTORS (continued)			
L204	Detector Filter Choke	40323	21	Q16
L205	Diode Load Peaking Coil	40117	21	P16
L206	5.5 Mc/s. Trap	40120	21	P13
L207	Video Amplifier Shunt Peaking Coil	40118	21	P14
L208	Video Amplifier Series Peaking Coil	40119	21	N12
L401	Horizontal Sine Wave Coil	40050	20	H15
L402	Horizontal Linearity Coil	40048	21	U3
L403	Choke	602019 or		
L404	Horizontal Width Coil	214516	21	T9
L405	Deflection Yoke	40770	21	T4
L406		40760		
L407				
L408				
L409	Filter Choke	40113A	20	E19

CODE No.	DESCRIPTION			PART No.	FIG. No.	LOCATION
	RESISTORS					
R1	820 ohms	± 10%	½ watt		19	E5
R2	6.8K ohms	± 10%	½ watt		19	E7
R3	120 ohms	± 10%	½ watt		19	E8
R4	1 megohm	± 10%	½ watt		19	F8
R5	1 megohm	± 10%	½ watt		19	F9
R6	100K ohms	± 10%	½ watt		19	F8
R7	1K ohms	± 10%	½ watt		19	B9
R8	1K ohms	± 10%	½ watt		19	E9
R9	1K ohms	± 10%	½ watt		19	B11
R10	120 ohms	± 10%	½ watt		19	E12
R11	3.3K ohms	± 10%	½ watt		19	C11
R12	100K ohms	± 10%	½ watt		19	D11
R13	100K ohms	± 10%	½ watt		19	E10
R14	15K ohms	± 5%	½ watt		19	E12
R15	100K ohms	± 10%	½ watt		19	F12
R16	5.6K ohms	± 10%	½ watt		19	F11
R101	82 ohms	± 10%	½ watt		21	U19
R102	15K ohms	± 10%	3 watts		21	T6
R103	56K ohms	± 10%	½ watt (in T101)		20	V8
R104	1K ohms	± 10%	½ watt		21	V17
R105	47 ohms	± 10%	½ watt		21	V15
R106	47K ohms	± 10%	½ watt		21	V15
R107	4.7K ohms	± 5%	½ watt		21	V14
R108	4.7K ohms	± 5%	½ watt		21	V15
R109	10K ohms	± 10%	½ watt		21	E4
R110A	500K ohms	Volume		40350	20	D22
R110B	200K ohms	Brightness		40350	20	C22
R111	10 megohms	± 10%	½ watt		21	D6
R112	47 ohms	± 10%	½ watt		21	D6
R113	330K ohms	± 10%	½ watt		21	E7
R114	470K ohms	± 10%	½ watt		21	E8

CIRCUIT CODE

CODE No.	DESCRIPTION			PART No.	FIG. No.	LOCATION
	RESISTORS (continued)					
R115	47K ohms	± 10%	½ watt		21	F7
R116	390K ohms	± 10%	½ watt		21	D7
R117	1 megohm	Tone		40736	20	C16
R118	1K ohm	± 10%	½ watt		21	D6
R119	680K ohms	± 10%	½ watt		21	D8
R120	250 ohms	± 10%	5 watts (W.W.)		21	E6
R121	330 ohms	± 10%	3 watts (W.W.)		21	H7
R201	1K ohms	± 10%	½ watt		21	K16
R202	4.7K ohms	± 5%	½ watt (in T201)		20	J11
R203	100 ohms	± 5%	½ watt		21	K16
R204	1K ohms	± 10%	½ watt		21	K18
R205	150K ohms	± 10%	½ watt		21	L17
R206	150K ohms	± 10%	½ watt		21	M17
R207	15K ohms	± 10%	½ watt		21	K18
R208	5.6K ohms	± 5%	½ watt		21	J18
R209	1.5K ohms	± 10%	½ watt		21	L18
R210	12K ohms	± 5%	½ watt		21	L19
R211	68 ohms	± 5%	½ watt		21	L20
R212	1K ohms	± 10%	½ watt		21	N18
R213	10 ohms	± 10%	½ watt		21	M18
R214	1.5K ohms	± 5%	½ watt		21	N19
R215	180 ohms	± 10%	½ watt		21	N20
R216	1K ohms	± 10%	½ watt		21	P18
R217	10K ohms	± 10%	2 watts		21	S20
R218	4.7K ohms	± 5%	½ watt (in T205)		20	R8
R219	1 megohm	± 10%	½ watt		21	T19
R220	3.9K ohms	± 5%	½ watt		21	P16
R221	33 ohms	± 10%	½ watt		21	R16
R222	47K ohms	± 10%	1 watt		21	N15
R223	220 ohms	± 10%	½ watt		21	P15
R224	6.75K ohms	± 10%	10 watts (W.W.)		21	R14
R225	3.3K ohms	± 10%	½ watt		21	P13
R226	15K ohms	Contrast		40354	20	N13
R227	1K ohms	± 10%	½ watt		21	L11
R228	330K ohms	± 10%	½ watt		21	M11
R229	470K ohms	± 10%	½ watt		21	L12
R230	270K ohms	± 10%	½ watt		21	S7
R231	2.5 megohms	Focus		40352	21	X12
R301	120K ohms	± 5%	½ watt		21	L16
R302	2.2 megohms	± 5%	1 watt		21	S16
R303	270K ohms	± 5%	½ watt		21	S14
R304	100K ohms	± 5%	½ watt		21	S13
R305	47K ohms	± 10%	1 watt		21	T12
R306	56K ohms	± 10%	½ watt		21	S12
R307	680K ohms	± 10%	½ watt		21	N9
R308	12K ohms	± 10%	½ watt		21	T14
R309	470K ohms	± 10%	½ watt		21	W14
R310	220K ohms	± 10%	½ watt		21	X13
R311	500K ohms	A.G.C.		40351/2	21	X15

CODE No.	DESCRIPTION			PART No.	FIG. No.	LOCATION
	RESISTORS (continued)					
R312	2.2 megohms	± 10%	½ watt		21	Q8
R313	470K ohms	± 10%	½ watt		21	P9
R314	15K ohms	± 10%	½ watt		21	L9
R315	4.7K ohms	± 10%	½ watt		21	L8
R316	22K ohms	± 10%	½ watt		21	L8
R317	22K ohms	± 10%	½ watt		21	Q13
R318	270K ohms	± 10%	½ watt		21	Q12
R319	220K ohms	± 10%	½ watt		21	Q10
R320	39K ohms	± 10%	½ watt		21	Q11
R321	10K ohms	± 10%	½ watt		21	Q13
R322	680K ohms	± 10%	½ watt		21	R10
R323	2.7K ohms	± 10%	½ watt		21	N8
R324	1 megohm	± 10%	½ watt		21	M8
R325	2.7K ohms	± 5%	½ watt		21	F19
R326	8.2K ohms	± 10%	1 watt		21	G20
R327	27K ohms	± 10%	1 watt		21	G20
R328	2.7K ohms	± 10%	½ watt		21	E19
R329	1 megohm	Vert. Hold		40399	20	C9
R330	1.2 megohms	± 10%	½ watt		21	D17
R331	10 megohms	± 10%	½ watt		21	E18
R332	270K ohms	± 10%	½ watt		21	S7
R333	150K ohms	± 10%	½ watt		21	T8
R334	2.5 megohms	Height		40367	20	C14
R335	680K ohms	± 10%	½ watt		21	E16
R336	3.9K ohms	± 10%	½ watt		21	E15
R337	150K ohms	± 10%	½ watt		21	D15
R338	47K ohms	± 5%	2 watts		21	D14
R339	2.2 megohms	± 10%	½ watt		21	H17
R340	220 ohms	± 10%	1 watt		21	D15
R341	1.5K ohms	Vert. Linearity		40355	20	C10
R342	150 ohms	± 10%	1 watt		21	F16
R343	27K ohms	± 10%	2 watts		21	E13
R344	1K ohms	± 10%	1 watt		21	G15
R345	3.3K ohms	± 10%	½ watt		21	J7
R346	15K ohms	± 10%	½ watt		21	J7
R401	150K ohms	± 10%	½ watt		21	G10
R402	220K ohms	± 10%	½ watt		21	F10
R403	820K ohms	± 10%	½ watt		21	F9
R404	330K ohms	± 10%	½ watt		21	F10
R405	68K ohms	± 10%	½ watt		21	E9
R406	3.9K ohms	± 10%	½ watt		21	G7
R407	120K ohms	± 10%	1 watt		21	E10
R408	39K ohms	± 10%	½ watt		20	D12
R409	47 ohms	± 10%	½ watt		21	W10
R410	1 megohm	± 10%	½ watt		21	W9
R411	100 ohms	± 10%	5 watts (W.W.)		21	V7
R412	820K ohms	± 10%	1 watt		21	V8
R413	39K ohms	± 10%	1 watt		21	V9
R414	68K ohms	± 10%	½ watt		21	T7

CIRCUIT CODE

CODE No.	DESCRIPTION	PART No.	FIG. No.	LOCATION
	RESISTORS (continued)			
R415	11K ohms ± 10% 3 watts		21	U10
R416	.47 ohms ± 20% ½ watt (high volt. box)			
R417	2.2K ohms ± 10% ½ watt		21	S5
R418	1K ohms ± 10% ½ watt (high volt. box)			
R419	560 ohms ± 10% ½ watt (in yoke)			
R420	560 ohms ± 10% ½ watt (in yoke)			
R421	10K ohms ± 10% ½ watt		21	U12
R422	4.65K ohms ± 10% 10 watts (W.W.)		21	G14
R423	150 ohms ± 10% 1 watt		21	M17
	CAPACITORS			
C1	18 pF Tubular ± 5% NPO		19	G4
C2	5.6 pF Tubular ± 5% NPO		19	F5
C3	18 pF Tubular ± 5% NPO		19	F6
C4	470 pF Disc + 100% — 0% K5000		19	E5
C5	0.01 uF Disc + 100% — 0% K5000		19	D6
C6	0.001 uF Feed Thru + 100% — 0% K5000		19	E6
C7	270 pF Tubular ± 20% K1200		19	E7
C8	10 pF Tubular ± 5% NPO		19	E7
C9	6.8 pF Tubular ± 5% NPO		19	E8
C10	12 pF Tubular ± 5% NPO		19	D8
C11	4 - 10 pF Trimmer	231123	19	E7
C12	0.001 uF Disc + 100% — 0% K5000		19	E8
C13	0.001 uF Disc + 100% — 0% K5000		19	E9
C14	0.5 - 3 pF Trimmer	231122	19	E9
C15	180 pF Style "B" Tubular ± 5% N750		19	D9
C16	50 - 140 pF Trimmer Mica	40038	19	E10
C17	0.001 uF Feed Thru + 100% — 0% K5000		19	D10
C18	0.001 uF Feed Thru + 100% — 0% K5000		19	E10
C19	0.001 uF Feed Thru + 100% — 0% K5000		19	D10
C20	0.5 - 3 pF Trimmer	231122	19	E11
C21	270 pF Tubular ± 20% K1200		19	E9
C22	0.88 pF Bead ± 20% NPO		19	B11
C23	82 pF Style "C" Disc ± 10% N750		19	E12
C24	270 pF Disc ± 20% K1200		19	F12
C25	0.63 pF Bead ± 20% NPO		19	D11
C26	12 pF Tubular ± 5% N750		19	F12
C27	0.5 - 3 pF Trimmer	231122	19	F11
C28	10 pF Tubular ± 5% NPO		19	E11
C29	Trimmer (Fine Tuning) A.W.A. Special	40135	19	E13
C30	470 pF Disc + 100% — 0% K5000		19	C6
C31	470 pF Disc + 100% — 0% K5000		19	C6
C101	0.01 uF Ceramic + 100% — 0% K5000		21	T19
C102	0.01 uF Ceramic + 100% — 0% K5000		21	U19
C103	39 pF Ceramic ± 10% N220 (in T101)		20	V8
C104	39 pF Ceramic ± 10% N220 (in T101)		20	V8
C105	0.01 uF Ceramic + 100% — 0% K5000		21	V17
C106	100 pF 500V Working Mica ± 5% (in T102)		20	U11

CODE No.	DESCRIPTION	PART No.	FIG. No.	LOCATION
	CAPACITORS (continued)			
C107	470 pF 500V Working Mica ± 5%		21	V15
C108	470 pF 500V Working Mica ± 5%		21	V14
C109	10 uF 65 P.V. Electrolytic		21	W14
C110	0.001 uF 600V Working ± 10%		21	W16
C111	0.01 uF 200V Working ± 20%		21	W16
C112	0.022 uF 200V Working ± 10%		21	D5
C113	0.01 uF 200V Working ± 20%		21	D6
C114	0.0047 uF 400V Working ± 20%		21	E7
C115	0.047 uF 400V Working ± 20%		21	E8
C116	220 pF 1000V Working Mica ± 10%		21	D9
C117	12 pF 1000V Working Mica ± 10%		21	E8
C118	25 uF 40 P.V. Electrolytic		21	F5
C119A	20 uF 450 P.V. Electrolytic		20	G12
C119B	50 uF 65 P.V. Electrolytic		20	G12
C119C	10 uF 450 P.V. Electrolytic		20	G12
C120	0.0022 uF 600V Working ± 10%		21	F7
C201	10 - 160 pF Trimmer	231124	21	J15
C202	27 pF Ceramic ± 5% NPO		21	K15
C203	12 pF Ceramic ± 5% NPO		21	H14
C204	0.22 uF 200V Working ± 20%		21	L14
C205	0.0047 uF Ceramic + 100% — 0%		21	J17
C206	470 pF Ceramic + 100% — 0%		21	K16
C207	33 pF Ceramic ± 5% NPO (in T201)		20	J11
C208	470 pF Ceramic + 100% — 0%		21	L17
C209	470 pF Ceramic + 100% — 0%		21	K18
C210	0.0047 uF Ceramic + 100% — 0%		21	J19
C211	0.0047 uF Ceramic + 100% — 0%		21	K20
C212	470 pF Ceramic + 100% — 0%		21	K19
C213	0.0047 uF Ceramic + 100% — 0%		21	L19
C214	0.0047 uF Ceramic + 100% — 0%		21	M20
C215	470 pF Ceramic + 100% — 0%		21	N18
C216	0.001 uF Ceramic + 100% — 0%		21	N19
C217	0.0047 uF Ceramic + 100% — 0%		21	Q20
C218	0.001 uF Ceramic + 100% — 0%		21	P18
C219	470 pF Ceramic + 100% — 0%		21	R16
C220	4.7 pF Ceramic ± .5 pF N750 (in T205)		20	R8
C221	0.001 uF Ceramic + 100% — 0%		21	R20
C222	0.0047 uF Ceramic + 100% — 0%		21	R16
C223	4.7 pF Ceramic ± .5 pF N750		21	R18
C224	15 pF Ceramic ± 10% N750		21	S19
C225	0.0047 uF Ceramic + 100% — 0% (in T206)		20	S8
C226	39 pF Ceramic ± 5% N750		21	N14
C227	0.018 uF 400V Working ± 10%		21	Q16
C228	12 pF Ceramic ± 5% N750		21	P13
C229	47 pF Ceramic ± 5% N750		21	P14
C230	47 pF Ceramic ± 5% N750		21	P13
C231A	5 uF 450 P.V. Electrolytic		20	M10
C231B	5 uF 600 P.V. Electrolytic		20	M10
C231C	25 uF 450 P.V. Electrolytic		20	M10

CIRCUIT CODE

CODE No.	DESCRIPTION	PART No.	FIG. No.	LOCATION
	CAPACITORS (continued)			
C231D	70 uF 450 P.V. Electrolytic		20	M10
C232	0.22 uF 400V Working ± 20%		21	M11
C301	0.47 uF 200V Working ± 20%		21	S16
C302	0.01 uF 400V Working ± 20%		21	T13
C303	0.0033 uF 600V Working ± 10%		21	T12
C304	0.0015 uF 600V Working ± 20%		21	W14
C305	0.033 uF 400V Working ± 20%		21	N9
C306	330 pF 500V Working Mica ± 10%		21	P9
C307	0.0022 uF 600V Working ± 10%		21	L9
C308	0.1 uF 400V Working ± 20%		21	Q10
C309	330 pF 500V Working Mica ± 10%		21	Q12
C310	0.0068 uF 600V Working ± 20%		21	R11
C311	47 pF Ceramic ± 5% N750		21	P11
C312	560 pF 1000V Working Mica ± 10%		21	M8
C313	82 pF 1000V Working Mica ± 10%		21	G10
C314	0.0047 uF 400V Working ± 20%		21	G20
C315	0.027 uF 400V Working ± 10%		21	E19
C316	0.0068 uF 500V Working Mica ± 5%		21	F18
C317	0.047 uF 600V Working ± 10%		21	E16
C318	0.047 uF 600V Working ± 20%		21	F17
C319	0.001 uF 1600V Working ± 10%		21	E12
C320	0.068 uF 200V Working ± 10%		21	D15
C321	0.022 uF 1000V Working ± 10%		21	E14
C322	0.027 uF 1000V Working ± 10%		21	F14
C323	0.047 uF 600V Working ± 20%		21	J7
C324	0.0047 uF 400V Working ± 20%		21	J7
C325	0.22 uF 400V Working ± 20%		21	K8
C401	82 pF 1000V Working Mica ± 10%		21	G10
C402	0.047 uF 400V Working ± 20%		21	F9
C403	0.022 uF 400V Working ± 20%		21	E10
C404	0.47 uF 200V Working ± 20%		21	F9
C405	270 pF 1000V Working Mica ± 5%		21	D10
C406	0.01 uF 500V Working Mica ± 5%		21	H12
C407	0.0012 uF 500V Working Mica ± 5%		21	W9
C408	560 pF 1000V Working Mica ± 10%		21	W8
C409	20-220 pF Trimmer	231127	21	X9
C410	0.1 uF 600V Working ± 20%		21	U7
C411	0.27 uF 200V Working ± 10%		21	V7
C412	0.1 uF 600V Working ± 20%		21	W10
C413	270 pF 1000V Working Mica ± 20%		21	R8
C414	0.047 uF 1000V Working ± 10%		21	S8
C415	0.047 uF 1000V Working ± 10%		21	Q8
C416	560 pF 1000V Working Mica ± 10%		21	S4
C417	330 pF 1500V Ceramic ± 10%		21	T10
C418	270 pF 2500V Ceramic ± 10%		21	U11
C419	150 pF 2500V Ceramic ± 10%		21	V11
C420	220 pF 2500V Ceramic ± 10% (in yoke)			
C421	90 uF 525 P.V. Electrolytic		20	E24
C422	50 uF 400 P.V. Electrolytic		20	J15

CODE No.	DESCRIPTION	PART No.	FIG. No.	LOCATION
	TRANSFORMERS			
T1	Aerial Matching Transformer	40156	19	F2
T2	Converter I.F.	40325	19	F12
T101	Sound I.F.	40093	20	V8
T102	Ratio Detector	40077	20	U11
T103	Audio Output	21435	20	H19
T201	Link I.F.	40072	20	J11
T202	1st Video I.F.	40071	20	J9
T203	2nd Video I.F.	40071	20	K8
T204	3rd Video I.F.	40071	20	M8
T205	4th Video I.F.	40075	20	R8
T206	Sound Take Off	40076	20	S8
T301	Vertical Oscillator	40066B	21	D19
T302	Vertical Output	40067A	20	D9
T401	Horizontal Blocking Oscillator	40047	20	D12
T402	Horizontal Output	40773	20	V21
T403	Power Transformer	40070C	20	N22
	SWITCHES			
S1	Channel Selector		19	D12
S2	Channel Selector		19	D11
S3	Channel Selector		19	D9
S4	Channel Selector		19	D7
S401	Power/Volume (on R110A)		20	E22
	PILOT LAMP			
PL1	12V, 2.2 watt M.E.S.		20	B3
	FUSES			
F401	.375 amp. Cartridge		20	R13
F402	1.5 amp. Cartridge		21	W2
	LOUDSPEAKERS			
LS101	7 x 5 P.M. Table Model	21045		
LS102	7 x 5 P.M. Table Model	21034		
LS101	9 x 6 P.M. Console Model	21520		
LS102	9 x 6 P.M. Console Model	21519		

(Refer to front page for complete list.)

AWA