SERVICE MANUAL

MODEL 152 MANUAL

MODEL 159 PUSH-BUTTON

'VOLUMATIC' 9 TRANSISTOR CAR RADIOS

MODEL 156 PUSH-BUTTON "COACHLINER" RADIO

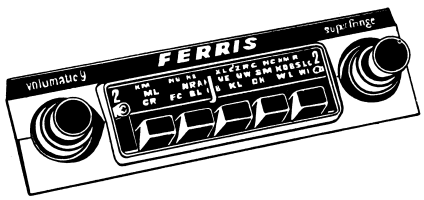

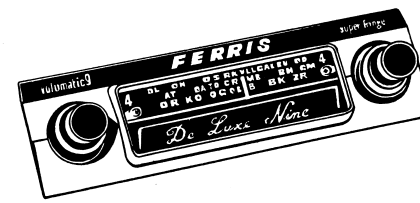

SPECIFICATIONS

INTERMEDIATE FREQUENCY: 455 Kc/s

TRANSISTOR COMPLEMENT:

1 x 2N1637 RF Amplifier
1 x 2N1639 Converter
1 x 2N1638 1st IF Amplifier
1 x 2N1638 2nd IF Amplifier
1 x 2N406 Audio A.V.C.
1 x 2N406 Audio Amplifier
1 x SE6001 Audio Driver
2 x 2N301 P.P. Power Output

TUNING RANGE: 525 - 1610 Kc/s

DIODES:

1 x OA90 Detector & A.G.C.
1 x AS2 Bias Compensating

CONSUMPTION:

180 ma including dial lamp for 12 volts at zero signal.

LOUD SPEAKER:

Size & Type to suit vehicle.
Voice Coil Impedance 3 ohms.

TUNING DRIVE RATIO:

4½ turns of knob for full pointer traverse.

POWER OUTPUT:

Undistorted 8 watts.
Maximum 10 watts.

DIMENSIONS: 7" x 5¾" x 2"

WEIGHT: 5 lbs.

DESCRIPTION

The Ferris Models 152 (Manual) and 159 (Push-Button) are compact and rugged 9 Transistor Car Radios designed to mount either in-dash or under-dash in a motor vehicle. Both have polarity reversal adjustment thus giving correct matching for the appropriate installation.

The circuit features a band pass coupled aerial stage which is link-fed to the emitter of an RF amplifier. This collector tuned amplifier is followed by a conventional self-oscillating mixer stage, and thence by two stages of IF amplification. A.G.C., which is derived from a diode detector, controls the RF amplifier and first IF stage gains.

A transistor, which is part of the diode load, acts as a variable impedance device and presents a constant audio voltage at the volume control over widely varying input levels to the aerial circuit. The overall result is a very flat A.G.C. response.

Up to 8 watts of low distortion output is available from the audio amplifier section of the receivers.

CONTROLS

A diecast metal knob operates permeability tuner via anti-back-lash gear system.

VOLUME & ON/OFF SWITCH: A diecast concentric knob controls receiver volume and on/off switch.

TONE CONTROL: A continuously variable tone control is concentric with volume control.

PUSH-BUTTONS (MODEL 159): Push-buttons permit automatic selection of any five stations.

EXTERNAL CONNECTIONS: Aerial and speaker connecting sockets are at rear corners of set. Aerial compensating trimmer is adjacent to aerial socket and battery lead is adjacent to speaker socket.

POLARITY SELECT: To adjust polarity, remove top lid and follow instructions on indicator plate.

LID REMOVAL: To remove either lid, remove 3 self-tapping screws in addition to fixing screws at each side. Slacken the lid screws at front of set. Lid can now be slid off towards rear of set.

DIAL SCALE (MODEL 159): The M159 is supplied with 6 dial scales (one for each state) including the one which is already fitted.

To change dial scale:-

1. Remove the two screws which secure dial scale.
2. Remove dial scale.
3. Select required dial scale and snap off along score line.

(When breaking scales off, bend the material in the direction which results in the "V" score OPENING not closing. This procedure will result in a clean break along the scale.)

4. Fit new dial scale.

TO SET PUSH-BUTTONS FOR ANY DESIRED STATIONS:

1. Tune receiver manually to first desired station by means of tuning knob, starting from left hand end of dial scale.
2. With pointer on station pull No.1 button (from left) straight out. Button will move about ½"
3. Now push this same button right in as far as it will go.
4. Repeat the above sequence with 2nd, 3rd, 4th and 5th stations.

   Readjust on any station if necessary by repeating (2) and (3) above.

   N.B. slight sideways movement of tuning knob ensures drag-free push-button action and accurate repeat tuning.

DIAL SCALE (MODEL 152):

The M152 is supplied with 6 dial scales (one for each state) including the one already fitted.

To change dial scales follow same procedure as for M159 shown above.

DIAL LAMP:

1. Remove knobs and escutcheon.
2. Remove two screws marked "A" FIG. 1.
3. Remove diecast shroud.
4. Replace dial lamp.

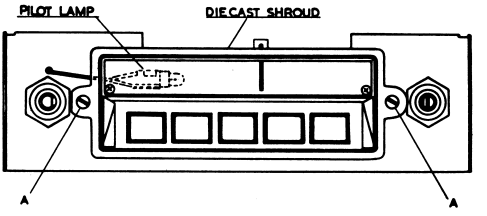

FIG.1.

ALIGNMENT PROCEDURE FOR MODELS 152-156-159

For all alignment operations, connect the earth side of the signal generator to the frame or case of receiver, and keep the generator output as low as possible to avoid A.V.C. action. Set volume control at maximum.

N.B. USE PROPER ALIGNMENT TOOL FOR MAKING ADJUSTMENTS. CORES ARE EASILY BROKEN BY IMPROPER HANDLING, MAKING REPLACEMENT OF ENTIRE COIL OR TRANSFORMER NECESSARY.

STEP	CONNECT SIG. GEN. TO:	TUNE SIG. GEN. TO:	TUNE RECEIVER TO:	ADJ. FOR MAX. OUTPUT
1 2 3	Base of 2N1639 via .1uf capacitor.	455 Kc/s	HF end of band.	IF3 (one core) IF2 (one core) IF1 on outer peaks
4 REPEAT ABOVE ADJUSTMENTS UNTIL NO FURTHER INCREASE CAN BE OBTAINED.				
5	Aerial socket via dummy aerial (see diagram).	525 Kc/s	Tune Receiver to maximum. LF end of band.	Osc. TrimmerTR4
MAX. HF LIMIT SHOULD NOW BE 1610 Kc/s				
6	Aerial socket via dummy aerial (see diagram).	1400 Kc/s	1400 Kc/s	RF Trimmer TR3 2nd Ant. Trim. TR2 1st Ant. Trim. TR1
CHECK SENSITIVITY AT 1400, 900 AND 550 Kc/s				

N.B. Cores of permeability tuner are accurately aligned and sealed at factory and should not require adjustment. If however, a core is replaced due to breakage, it should be peaked at 1200 Kc/s. Seal with paint or lacquer.

DUMMY AERIAL ARRANGEMENT FOR ALIGNMENT MODELS 159-152-156

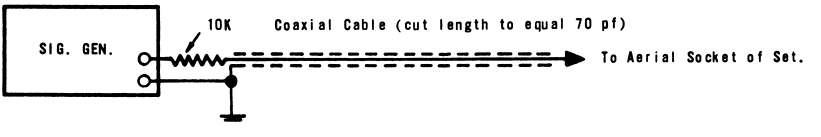

DC RESISTANCE OF WINDINGS IN OHMS:

Aerial Filter Choke (L1)	2.5
1st Ant. Coil (L2)	8.5
2nd Ant. Coil Primary) (L3)	8.5
2nd Ant. Coil Secondary) (L3)	Less than 1 Ohm.
RF Coil (L4)	8.5
Oscillator Coil Primary) (L5)	1.0
Oscillator Coil Secondary) (L5)	3.5
HF Choke (L6)	Less than 1 Ohm.
LF Choke (L7)	Less than 1 Ohm.
HF Choke (L8)	Less than 1 Ohm.
IF1 Primary Total	5.0
IF1 Secondary Total	5.0
IF2 Primary Total	5.0
IF2 Secondary Total	0.5
IF3 Primary Total	5.7
IF3 Secondary	2.3
Driver Transformer Primary	55.0
Driver Transformer Secondary Total	18.0
Speaker Transformer Primary Total	Less than 1 Ohm.
Speaker Transformer Secondary	Less than 1 Ohm.

FERRIS ALL TRANSISTOR CAR RADIO

MODEL 159 PUSH BUTTON — MODEL 152 MANUAL — 6 V

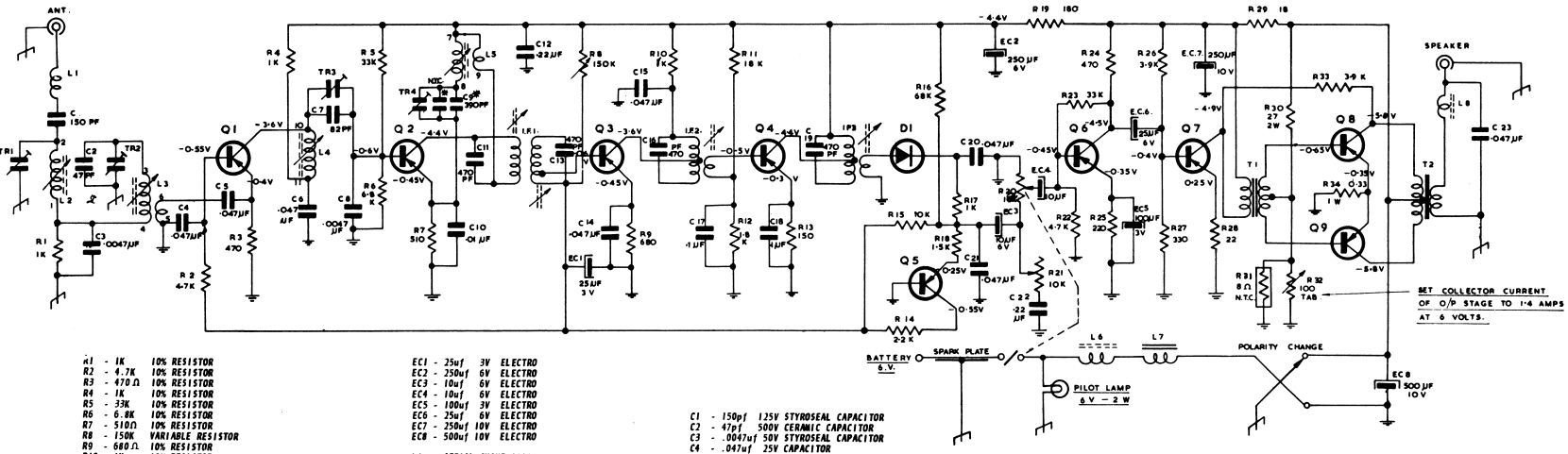

R1 - 1K	10% RESISTOR		
R2 - 4.7K	10% RESISTOR		
R3 - 470 Ω	10% RESISTOR		
R4 - 1K	10% RESISTOR		
R5 - 33K	10% RESISTOR		
R6 - 6.8K	10% RESISTOR		
R7 - 510Ω	10% RESISTOR		
R8 - 150K	VARIABLE RESISTOR		
R9 - 680 Ω	10% RESISTOR		
R10 - 1K	10% RESISTOR		
R11 - 18K	10% RESISTOR		
R12 - 1.8K	10% RESISTOR		
R13 - 150 Ω	10% RESISTOR		
R14 - 2.2K	10% RESISTOR		
R15 - 10K	10% RESISTOR		
R16 - 68K	10% RESISTOR		
R17 - 1K	10% RESISTOR		
R18 - 1.5K	10% RESISTOR		
R19 - 180 Ω	10% RESISTOR		
R20 - 10K	POTENTIOMETER)	CONCENTRIC	
R21 - 10K	POTENTIOMETER)		
R22 - 4.7K	10% RESISTOR		
R23 - 33K	10% RESISTOR		
R24 - 470 Ω	10% RESISTOR		
R25 - 220 Ω	10% RESISTOR		
R26 - 3.9K	10% RESISTOR		
R27 - 330 Ω	10% RESISTOR		
R28 - 22 Ω	10% RESISTOR		
R29 - 18 Ω	10% RESISTOR		
R30 - 27 Ω	10% RESISTOR (2W)		
R31 - 8 Ω	THERMISTOR 10%		
R32 - 100 Ω	SLIDE RESISTOR		
R33 - 3.9K	10% RESISTOR		
R34 - 0.33	10% RESISTOR (1 W)		

EC1 - 25uf	3V	ELECTRO
EC2 - 250uf	6V	ELECTRO
EC3 - 10uf	6V	ELECTRO
EC4 - 10uf	6V	ELECTRO
EC5 - 100uf	3V	ELECTRO
EC6 - 25uf	6V	ELECTRO
EC7 - 250uf	10V	ELECTRO
EC8 - 500uf	10V	ELECTRO

L1 -	AERIAL CHOKE 6108
L2) -	PERMEABILITY
L3)	TUNER
L4)	MANUAL 830441
L5)	PUSH-BUTTON 830442
L6 -	HF CHOKE R828
L7 -	LF CHOKE 8127
L8 -	BEAD CHOKE 6109

Q1 - 2N1637	2N374	AF116	
Q2 - 2N1639	2N374	AF116	
Q3 - 2N1638	2N373	AF117	
Q4 - 2N1638	2N373	AF117	
Q5 - 2N406	AC125		
Q6 - 2N406	AC125		
Q7 - AS128	AC128		
Q8 - 2N301	OC26	25B337	
Q9 - 2N301	OC26	25B337	
D1 - OA90	1N60A		
D2 - AS2	AV2		

C1 - 150pf	125V STYROSEAL CAPACITOR
C2 - 47pf	500V CERAMIC CAPACITOR
C3 - .0047uf	50V STYROSEAL CAPACITOR
C4 - .047uf	25V CAPACITOR
C5 - .047uf	25V CAPACITOR
C6 - .047uf	25V CAPACITOR
C7 - 82pf	125V CAPACITOR
C8 - .0047uf	50V STYROSEAL CAPACITOR
C9 -	SEE NOTE *
C10 - .01uf	125V CAPACITOR
C11 - 470pf	125V STYROSEAL CAPACITOR
C12 - .22uf	25V CAPACITOR
C13 - 470pf	125V STYROSEAL CAPACITOR
C14 - .047uf	25V CAPACITOR
C15 - .047uf	25V CAPACITOR
C16 - 470pf	125V STYROSEAL CAPACITOR
C17 - .1uf	25V CAPACITOR
C18 - .1uf	25V CAPACITOR
C19 - 470pf	125V STYROSEAL CAPACITOR
C20 - .047uf	25V CAPACITOR
C21 - .047uf	25V CAPACITOR
C22 - .22uf	25V CAPACITOR
C23 - .047uf	25V CAPACITOR

TR1 -	3 PLATE TRIMMER
TR2 -	2 PLATE TRIMMER
TR3 -	2 PLATE TRIMMER
TR4 -	3.30 PLATE AIR TRIMMER
T1 -	DRIVER TRANSFORMER 5216
T2 -	OUTPUT TRANSFORMER 4331
IF1 -	455 KC TRANSFORMER 9129
IF2 -	455 KC TRANSFORMER 9131
IF3 -	455 KC TRANSFORMER 9132

BAND COVERAGE - 525 - 1610 Kc/s
IF FREQUENCY - 455 Kc/s
TOTAL BATTERY CURRENT - 1.6 AMPS

ALL RESISTORS ½ WATT UNLESS OTHERWISE STATED.

ALL RESISTORS IN OHMS UNLESS OTHERWISE STATED.

NOTE - ALL VOLTAGES CHECKED WITH 40.000 OPV METER AT ZERO SIGNAL OUTPUT.

DO NOT OPERATE SET WITHOUT SPEAKER CONNECTED.

* NOTE:
C9 & NTC MAY BE ONE OF 3 CAPACITOR COMBINATIONS:-
A - 390pf STYROSEAL - 68pf 4.7K NTC.
B - 220pf N150 - 220pf N750 NTC.
C - 330pf STYROSEAL - 140pf N750 NTC.

R.1895/2

RA. 2.11.66.

FERRIS ALL TRANSISTOR CAR RADIO
MODEL 159 PUSH BUTTON MODEL 152 MANUAL

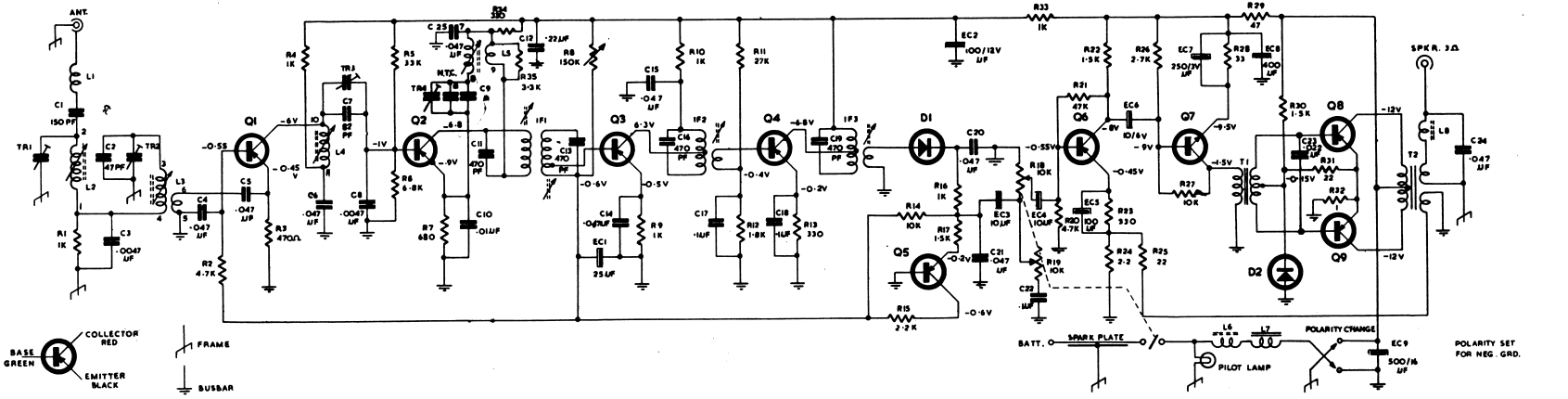

R1	1K	10%	RESISTOR	
R2	4·7K	10%	RESISTOR	
R3	470Ω	10%	RESISTOR	
R4	1K	10%	RESISTOR	
R5	33K	10%	RESISTOR	
R6	6·8K	10%	RESISTOR	
R7	680Ω	10%	RESISTOR	
R8	150K		VARIABLE RESISTOR	
R9	1K	10%	RESISTOR	
R10	1K	10%	RESISTOR	
R11	27K	10%	RESISTOR	
R12	1·8K	10%	RESISTOR	
R13	330Ω	10%	RESISTOR	
R14	10K	10%	RESISTOR	
R15	2·2K	10%	RESISTOR	
R16	1K	10%	RESISTOR	
R17	1·5K	10%	RESISTOR	
R18	10K		POTENTIOMETER	
R19	10K		POTENTIOMETER	
R20	4·7K	10%	RESISTOR	
R21	47K	10%	RESISTOR	
R22	1·5K	10%	RESISTOR	
R23	330Ω	10%	RESISTOR	
R24	2·2Ω	10%	RESISTOR	
R25	22Ω	10%	RESISTOR	
R26	2·7K	10%	RESISTOR	
R27	10K	10%	RESISTOR	
R28	33Ω	10%	RESISTOR	
R29	47Ω	10%	RESISTOR	
R30	1·5K	10%	RESISTOR	
R31	22Ω	10%	RESISTOR	
R32	1Ω	10%	RESISTOR	
R33	1K	10%	RESISTOR	
R34	330	10%	RESISTOR	
R35	3·3K	10%	RESISTOR	
C1	150 PF	125V	STYROSEAL CAP.	
C2	47 PF	500V	CERAMIC CAP.	
C3	·0047µF	50V	STYROSEAL CAP.	
C4	·047µF	25V	CAPACITOR	
C5	·047µF	25V	CAPACITOR	
C6	·047µF	25V	CAPACITOR	
C7	82 PF	125V	CAPACITOR	
C8	·0047µF	50V	STYROSEAL CAP.	
C9	SEE NOTE			
C10	·01 µF	125V	CAPACITOR	
C11	470 PF	125V	STYROSEAL CAP.	
C12	·22 µF	25V	CAPACITOR	
C13	470 PF	125V	STYROSEAL CAP.	
C14	·047µF	25V	CAPACITOR	
C15	·047µF	25V	CAPACITOR	
C16	470 PF	125V	STYRO EAL CAP.	
C17	·1µF	25V	CAPACITOR	
C18	·1µF	25V	CAPACITOR	
C19	470PF	125V	STYROSEAL CAP.	
C20	·047µF	25V	CAPACITOR	
C21	·047µF	25V	CAPACITOR	
C22	·1µF	25V	CAPACITOR	
C23	·022µF	25V	CAPACITOR	
C24	·047µF	25V	CAPACITOR	
C25	·047µF	25V	CAPACITOR	
TR1	3 PLATE TRIMMER			
TR2	3 PLATE TRIMMER			
TR3	2 PLATE TRIMMER			
TR4	3-30 PLATE AIR TRIMMER			
T1	DRIVER TRANSFORMER 5214			
T2	OUTPUT TRANSFORMER 4324			
EC1	25 µF	6V	ELECTRO	
EC2	100 µF	12V	ELECTRO	
EC3	10 µF	6V	ELECTRO	
EC4	10 µF	6V	ELECTRO	
EC5	100 µF	3V	ELECTRO	
EC6	10 µF	6V	ELECTRO	
EC7	250 µF	3V	ELECTRO	
EC8	400 µF	16V	ELECTRO	
EC9	500 µF	16V	ELECTRO	
L1	AERIAL CHOKE		# 6108	
L2, L3, L4, L5	PERMEABILITY TUNER		MANUAL 830441 / PUSH BUTTON 830442	
L6	H.F. CHOKE		# R628	
L7	L.F. CHOKE		# 8127	
L8	BEAD CHOKE		# 6109	
IF1	455 KC	TRANSFORMER	9129	
IF2	455 KC	TRANSFORMER	9131	
IF3	455 KC	TRANSFORMER	9132	
Q1	2N1637	2N374	AF116	
Q2	2N1639	2N374	AF116	
Q3	2N1638	2N373	AF117	
Q4	2N1638	2N373	AF117	
Q5	2N406	AC125		
Q6	2N406	AC125		
Q7	SE6001			
Q8	2N301	OC26	2SB337	
Q9	2N301	OC26	2SB337	
D1	OA90	1N60A		
D2	AS2	AV2		

PILOT LAMP–12V – 2W

BAND COVERAGE 525 - 1610 KC/S
I F FREQUENCY 455 KC
TOTAL BATTERY CURRENT 230MA FOR 12V BATTERY
COLLECTOR CURRENT OF O/P STAGE FOR ZERO SIG.- 35MA

ALL RESISTORS 1/2 WATT, UNLESS OTHERWISE STATED
ALL RESISTORS IN OHMS, UNLESS OTHERWISE STATED.

NOTE : ALL VOLTAGES CHECKED WITH 40,000 O.P.V. METER AT ZERO SIGNAL INPUT.

DO NOT OPERATE SET WITHOUT SPEAKER CONNECTED.

NOTE:
C9 & N.T.C. MAY BE ONE OF 3 CAPACITOR COMBINATIONS
A - 390 PF STYROSEAL + 68PF 4-7K N.T.C.
B - 220 PF N150 N7C + 220PF N750 N.T.C.
C - 330 PF STYROSEAL + 140 PF N750 N.T.C.

R1895/1

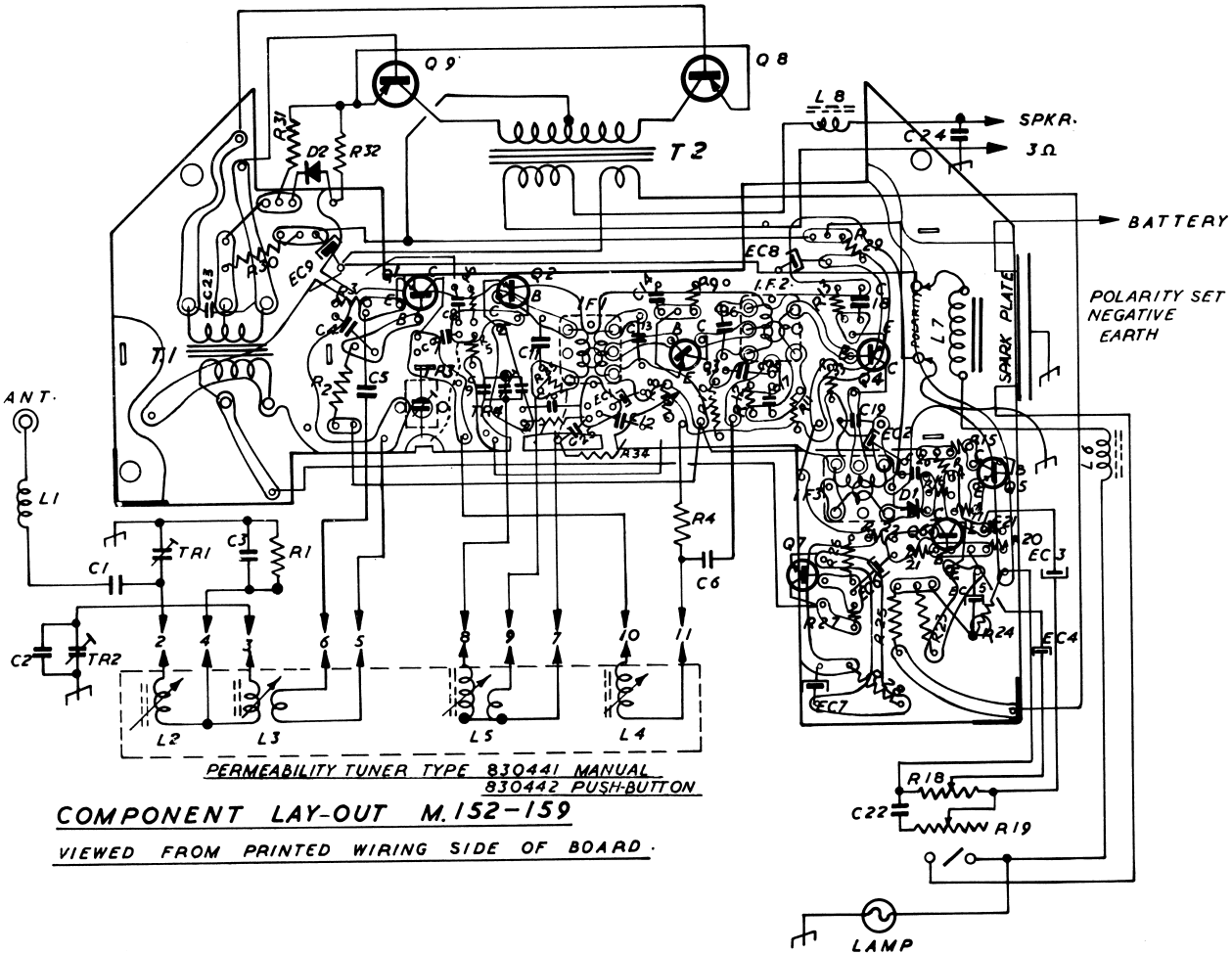

COMPONENT LAY-OUT M.152-159

VIEWED FROM PRINTED WIRING SIDE OF BOARD.

SERVICE HINTS

Extreme care should be used to avoid accidental shorting o. transistor elements to circuit ground. This is especially true of the output transistors. If a terminal of the driver transformer secondary should accidentally be grounded for a few seconds, the output transistors would be permanently damaged.

Since a transistor needs only low voltage applied to its terminals for conduction, testing continuity of a circuit which includes a transistor can result in misleading indications and damage to the transistor. To avoid this, remove the transistor from the circuit board before making continuity tests.

Voltmeters used for test purposes must have a sensitivity of at least 20,000 ohms per volt. The use of low impedance meters will give misleading results as serious shunting effects will occur. When checking for a circuit fault causing excessive battery drain, an overall current measurement and supplementary voltage measurements should be made.

Signal tracing by signal injection from a signal generator is carried out on transistor radios in exactly the same manner as has been done for many years with conventional valve radios. The signal generator should be connected in series with a capacitor (.1 uf) to avoid shorting out bias voltages.

The output of this receiver is of the "Class B" type. It should be noted that in "Class B" output, the battery current increases with increase in power output.

Transistors and printed circuit board can be damaged by excessive heat. Whenever soldering is necessary on the printed circuit board use a soldering iron which is both HOT and CLEAN. Do not hold the soldering iron on a soldering point any longer than is absolutely necessary. This minimises the amount of heat which will be radiated from the point of soldering. When soldering or unsoldering a transistor grasp the transistor lead with a pair of long-nose pliers to provide a heat sink. Excessive heat can damage a transistor.

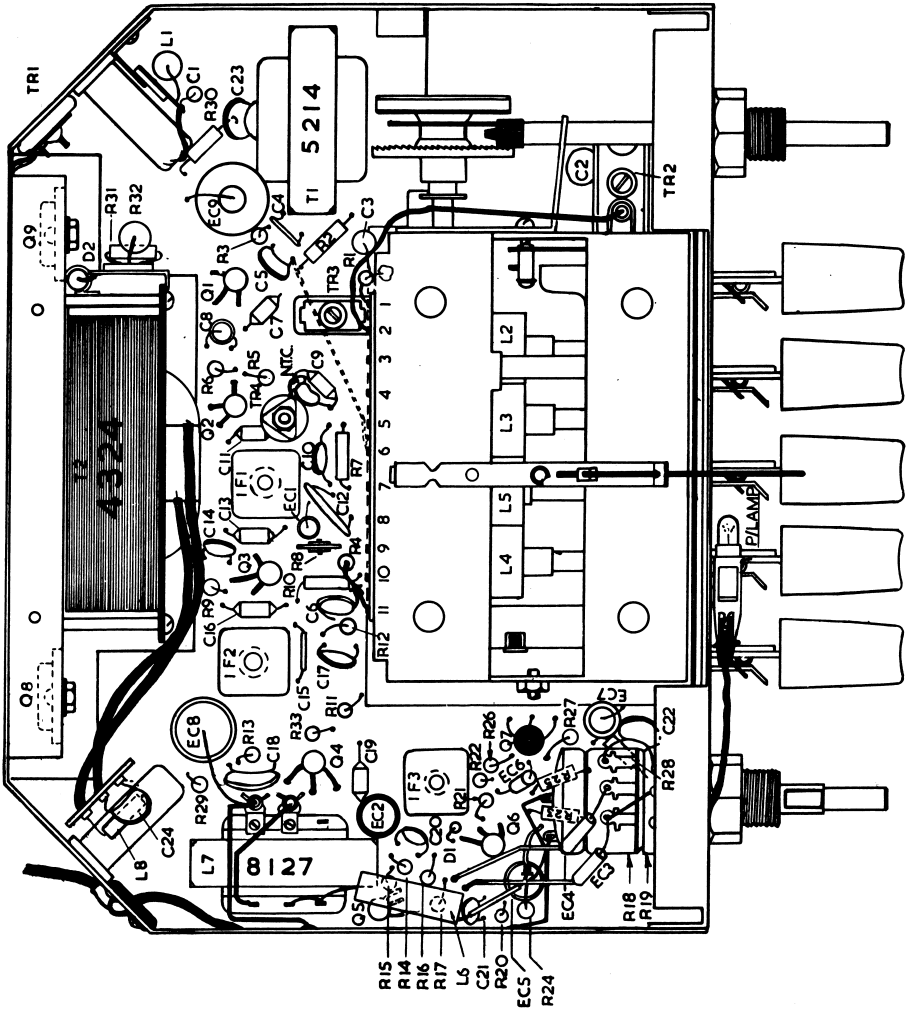

M152/159 COMPONENT LAYOUT

R34) ON REVERSE SIDE
R35) OF BOARD
C25)