To install speaker

a) Remove ornament plate. Install press board and speaker with four screws to instrument panel.

b) Replace ornament plate.

MAKE ELECTRICAL CONNECTION

a) Plug antenna lead into antenna receptaele on rear of receiver.

b) Before connect "A" lead to connector, make sure electric system, voltage and polarity.

c) Jumper should be pull out, when out speaker is used.

CAUTION: BE SURE THE RADIO "ON AND OFF" CONTROL IS IN OFF POSITION BEFORE MAKING ELECTRICAL CONNECTIONS.

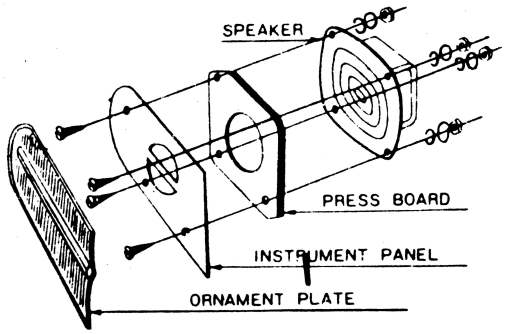
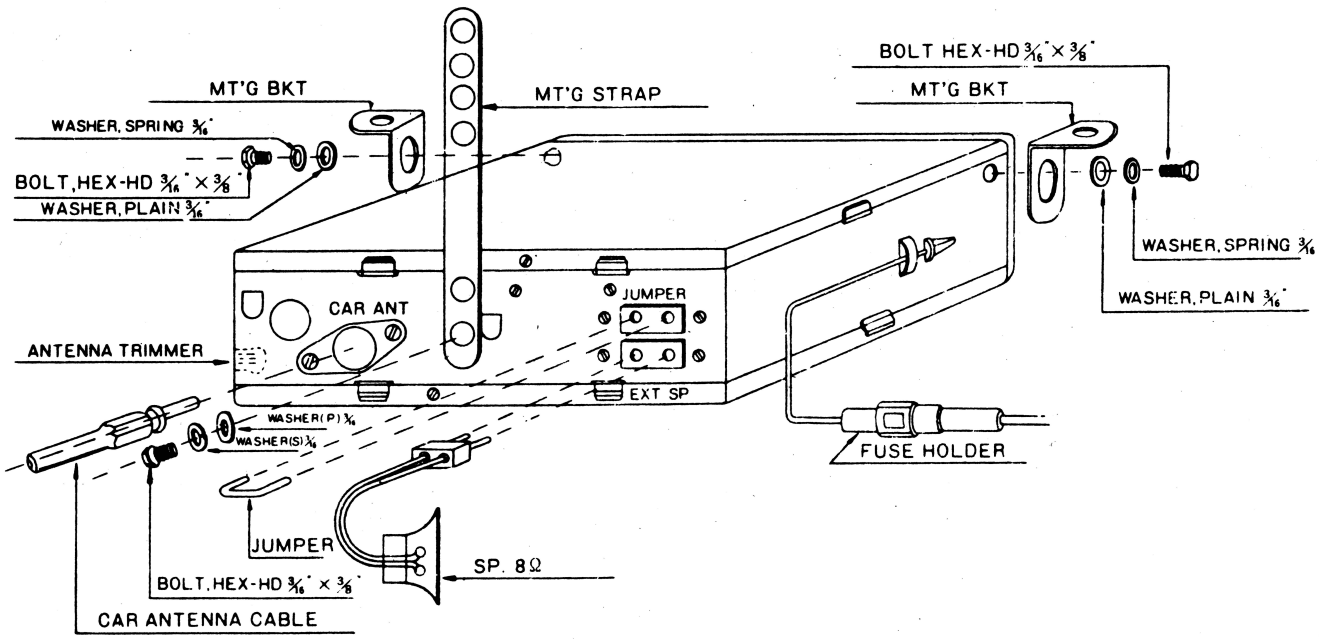
Following figure shows location of antenna receptacle, fuse holder, out speaker connector, jumper, antenna trimmer and mt'g strap.