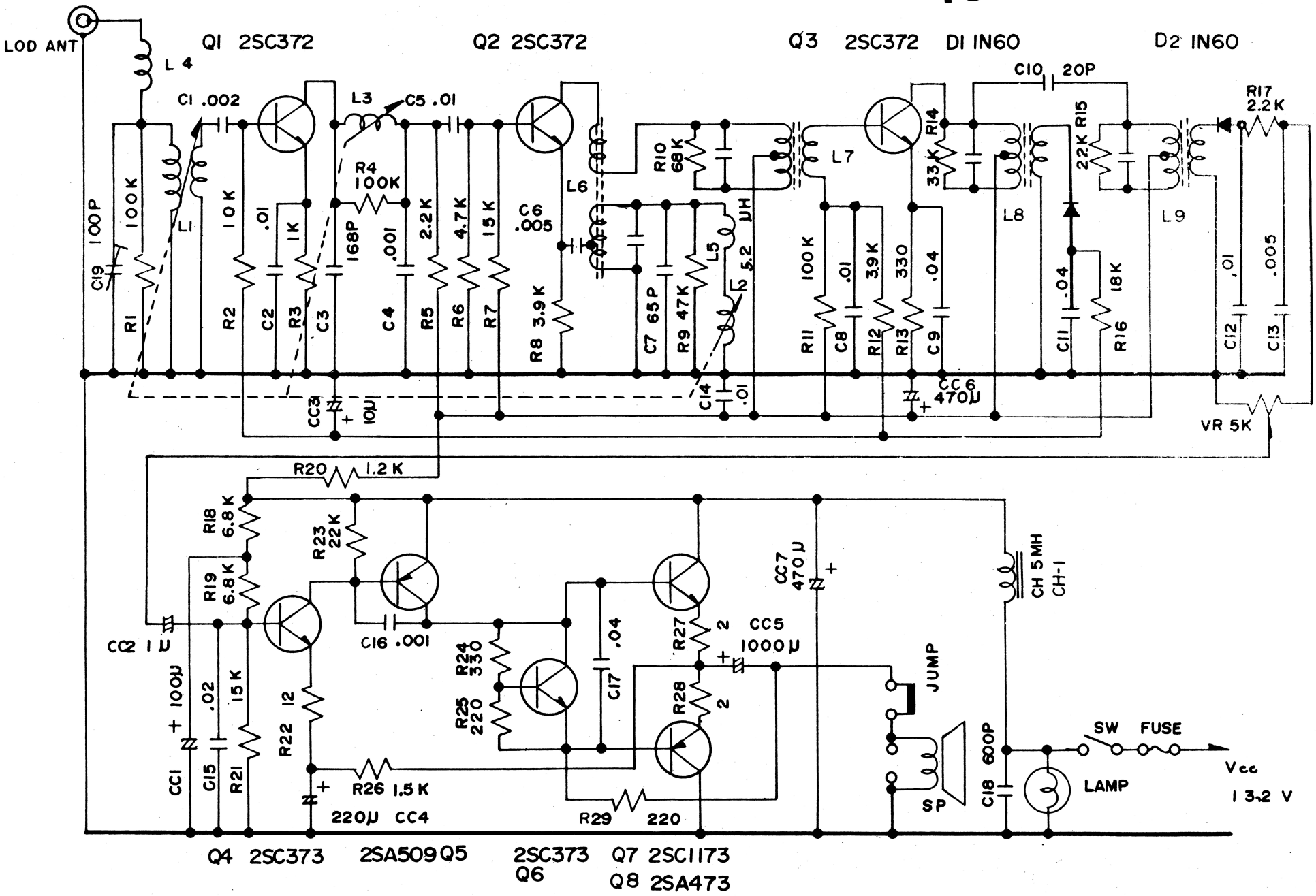SCHEMATIC DIAGRAM 1500